TYPE 120-K, Coding Keys
Inventory Check

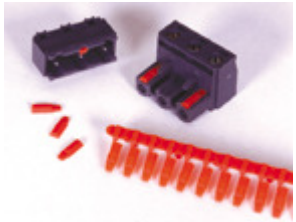

Coding keys. Application with the 122-A-111 and 122-M-221 is shown above.

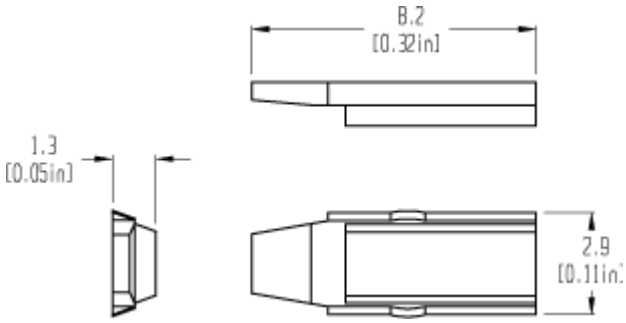

Dimensions: mm (in.)

When locating connector, allow 0.5 mm clearance around it for process-induced variations.

Description

Description Coding Keys are available for connectors of series 11 and 12. Coding keys are easily inserted into slots integrated in the plug and header.

Utility:
- Prevent the plugging of a plug into the wrong header
- Prevent backwards plugging of plug into header
- Prevent misaligned connections between plug and header
- Allows safe multi-cycle use of plug and header by preventing incorrect connection into wrong header
- Prevent incorrect electrical circuit connections and their consequences

Item	**120-K, Coding Keys**
120-K	COLOR: Red: leave blank Grey: 001