Data Sheet | Item Number: 231-564/108-000

THT male header; 1.2 x 1.2 mm solder pin; angled; Threaded flange; Pin spacing 5.08 mm; 4-pole; orange

https://www.wago.com/231-564/108-000

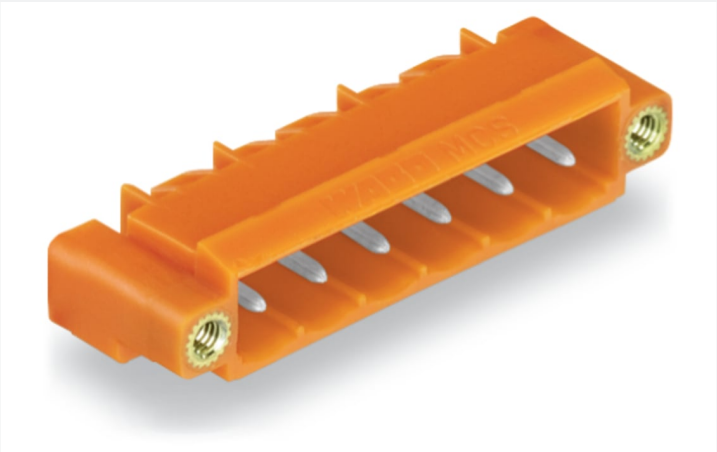

Color: orange

Similar to illustration

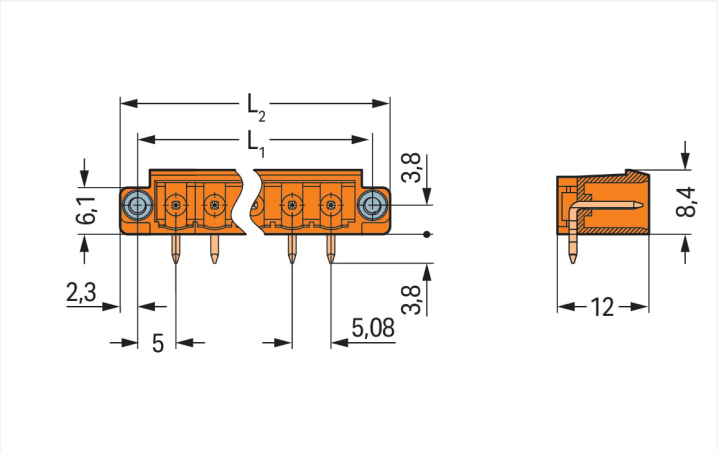

Dimensions in mm
L1 = (pole no. x pin spacing) + 5.4 mm
L2 = (pole no. x pin spacing) + 10 mm

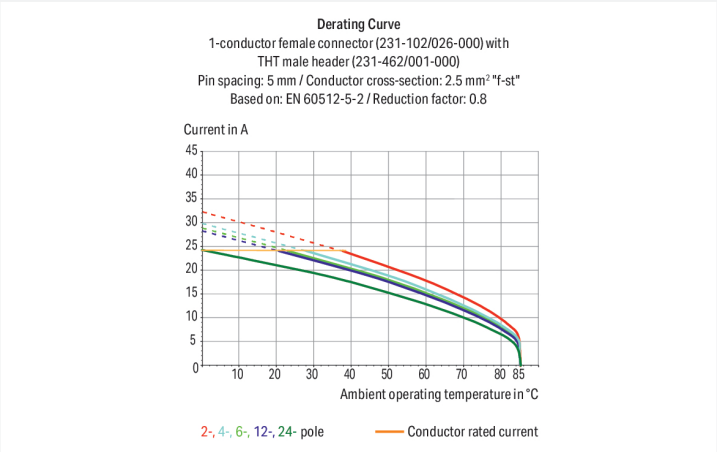

- Horizontal or vertical PCB mounting via straight or angled solder pins
- 1.2 x 1.2 mm solder pins allow nominal current up to 16 A, enhancing stability of shorter headers
- With coding fingers

Notes

Safety Information	The *MCS – MULTI CONNECTION SYSTEM* includes connectors without breaking capacity in accordance with DIN EN 61984. When used as intended, these connectors must not be connected/disconnected when live or under load.When used as intended, these connectors must not be connected/disconnected when live or under load. The circuit design should ensure header pins, which can be touched, are not live when unmated.
Variants:	Other pole numbers 3.8 mm pin projection for male headers with straight solder pins Gold-plated or partially gold-plated contact surfaces Other versions (or variants) can be requested from WAGO Sales or configured at https://configurator.wago.com/.

Electrical data

Ratings per	IEC/EN 60664-1		
Overvoltage category	III	III	II
Pollution degree	3	2	2
Nominal voltage	250 V	320 V	630 V
Rated surge voltage	4 kV	4 kV	4 kV
Rated current	16 A	16 A	16 A

Approvals per	UL 1059		
Use group	B	C	D
Rated voltage	300 V	-	300 V
Rated current	15 A	-	10 A

Approvals per	UL 1977
Rated voltage	600 V
Rated current	15 A

Approvals per	CSA		
Use group	B	C	D
Rated voltage	300 V	-	300 V
Rated current	15 A	-	10 A

Connection data

Total number of potentials	4
Number of connection types	1
Number of levels	1

Connection 1	
Pole number	4

Physical data

Pin spacing	5.08 mm / 0.2 inches
Width	30.32 mm / 1.194 inches
Height	12.2 mm / 0.48 inches
Height from the surface	8.4 mm / 0.331 inches
Depth	12 mm / 0.472 inches
Solder pin length	3.8 mm
Solder pin dimensions	1.2 x 1.2 mm
Drilled hole diameter with tolerance	1.7 $^{(+0.1)}$ mm

Mechanical data

Variable coding	Yes
Anti-rotation protection	Yes

Plug-in connection

Contact type (pluggable connector)	Male connector/plug
Connector (connection type)	for PCB
Mismating protection	No
Mating direction to the PCB	0 °
Locking of plug-in connection	Threaded flange

PCB contact

PCB contact	THT
Solder pin arrangement	over the entire male connector (in-line)
Number of solder pins per potential	1

 Continued on next page

Material data

Note (material data)	Information on material specifications can be found here
Color	orange
Material group	I
Insulation material (main housing)	Polyamide (PA66)
Flammability class per UL94	V0
Contact material	Electrolytic copper (E_{Cu})
Contact Plating	Tin
Fire load	0.037 MJ
Weight	2.3 g

Environmental requirements

Limit temperature range	-60 … +100 °C
Processing temperature	-35 … +60 °C

Environmental Testing (Environmental Conditions)

Test specification Railway applications – Rolling stock – Electronic equipment	DIN EN 50155 (VDE 0115-200):2022-06
Test procedure Railway applications – Rolling stock equipment – Shock and vibration tests	DIN EN 61373 (VDE 0115-0106):2011-04
Spectrum/Installation location	Service life test, Category 1, Class A/B
Function test with noise-like vibration	Test passed according to Section 8 of the standard
Frequency	f_1 = 5 Hz to f_2 = 150 Hz f_1 = 5 Hz to f_2 = 150 Hz
Acceleration	0.101g (highest test level used for all axes) 0.572g (highest test level used for all axes) 5g (highest test level used for all axes)
Test duration per axis	10 min. 5 h
Test directions	X, Y and Z axes X, Y and Z axes X, Y and Z axes
Monitoring for contact faults/interruptions	Passed
Voltage drop measurement before and after each axis	Passed
Simulated service life test through increased levels of noise-like vibration	Test passed according to Section 9 of the standard
Extended test scope: Monitoring for contact faults/interruptions	Passed Passed
Extended test scope: Voltage drop measurement before and after each axis	Passed Passed
Shock test	Test passed according to Section 10 of the standard
Shock form	Half sine
Shock duration	30 ms
Number of shocks per axis	3 pos. und 3 neg.
Vibration and shock stress for rolling stock equipment	Passed

 Continued on next page

Commercial data

Product Group	3 (Multi Conn. System)
eCl@ss 10.0	27-44-04-02
eCl@ss 9.0	27-44-04-02
ETIM 9.0	EC002637
ETIM 8.0	EC002637
PU (SPU)	100 pcs
Packaging type	Box
Country of origin	DE
GTIN	4045454843731
Customs tariff number	85366930000

Environmental Product Compliance

CAS-No.	7439-92-1
REACH Candidate List Substance	Lead
RoHS Compliance Status	Compliant,With Exemption
RoHS Exemption	6(c)
SCIP notification number (Austria)	65887fcd-74d8-4230-9514-439fc93b7457
SCIP notification number (Belgium)	f9d4dcfd-0d87-402a-b545-fe6ba7a6bdcf
SCIP notification number (Bulgaria)	b55bca63-2db3-47e0-916b-5536523f90c5
SCIP notification number (Czech Republic)	08b9c036-6b63-4209-8489-1e14d0e4b379
SCIP notification number (Denmark)	80025ce4-a96f-44ac-8b18-3167b685098f
SCIP notification number (Finland)	efb85f3c-7ebc-4d17-a5a0-867cecd5fe26
SCIP notification number (France)	34d526cf-860f-4904-b5ea-980b7b831962
SCIP notification number (Germany)	edbd42ae-6d0b-4823-9b00-e985eee318fa
SCIP notification number (Hungary)	a5c0c3a8-f7e8-4af1-a233-adb56bbc8e70
SCIP notification number (Italy)	197ffd89-7bec-4442-942b-c6c96bfa4bc3
SCIP notification number (Netherlands)	c78ca40f-fc97-460c-a9e6-6c369f675d8f
SCIP notification number (Poland)	60d131a4-3336-4489-bdc1-4999d636e58e
SCIP notification number (Romania)	715f48b5-a6f6-4b60-a1ef-5a3258991a30
SCIP notification number (Sweden)	7de73825-d34c-4060-a6fa-dfc347fb00fe

Approvals / Certificates

General approvals

Approval	Standard	Certificate Name
CB DEKRA Certification B.V.	IEC 61984	NL-39756/A1
CSA DEKRA Certification B.V.	C22.2	1466354
KEMA/KEUR DEKRA Certification B.V.	EN 61984	71-121453
UR Underwriters Laboratories Inc.	UL 1059	E45172

Declarations of conformity and manufacturer's declarations

Approval	Standard	Certificate Name
Railway WAGO GmbH & Co. KG	-	Railway Ready

 Continued on next page

Approvals for marine applications

Approval	Standard	Certificate Name
BV Bureau Veritas S.A.	IEC 60998	11915/D0 BV

Downloads

Environmental Product Compliance

Compliance Search

Environmental Product Compliance
231-564/108-000

Documentation

Additional Information

Technical Section	03.04.2019	pdf 2027.26 KB

CAD/CAE-Data

CAD data

2D/3D Models
231-564/108-000

CAE data

ZUKEN Portal
231-564/108-000

PCB Design

Symbol and Footprint
via SamacSys
231-564/108-000

Symbol and Footprint
via Ultra Librarian
231-564/108-000

1 Compatible Products

1.1 System counterpart

1.1.1 Female connector/socket

Item No.: 231-304/107-000
1-conductor female connector; CAGE CLAMP®; 2.5 mm²; Pin spacing 5.08 mm; 4-pole; Screw flange; 2,50 mm²; orange

 Continued on next page

1.2 Optional Accessories

1.2.1 Coding

1.2.1.1 Coding

Item No.: 231-129
Coding key; snap-on type; light gray

1.2.1.2 Intermediate plate

Item No.: 231-500
Spacer; for formation of groups; light gray

Installation Notes

Coding

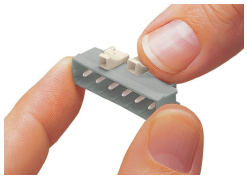

Coding a male header – fitting coding key (s).