Devices thru Material Innovation

NEC/TOKIN

Vol. 02

Super Capacitors
(ELECTRIC DOUBLE-LAYER CAPACITORS)

SUPER CAPACITORS

FOR CORRECT USE OF SUPER CAPACITORS

1. Please confirm the operating conditions and the specifications of the Super Capacitors befor using them.
2. The electrolyte of these Super Caapacitors is sealed with material such as rubber. When you use the capacitors for a long time at high temperature, the moisture of the eleotrolyte evaporates and the equivalent series resistance (E.S.R.) increases. The fundamental failure mode is the open mode depending on E.S.R. increase.

   When using a capacitor, please introduce a safe design assuming unexpected capacitor failure, such as redundancy in design and protection from fire and erroneous operation.
3. Please read 'Notes on Using the Super Capacitor' on page 56 when you design the circuits using the Super Capacitors.

ISO 9001 QS 9000	ISO 14001
JQA JQA-0366	JQA JQA-E-90094

CONTENTS

Organization of Super Capacitor Series

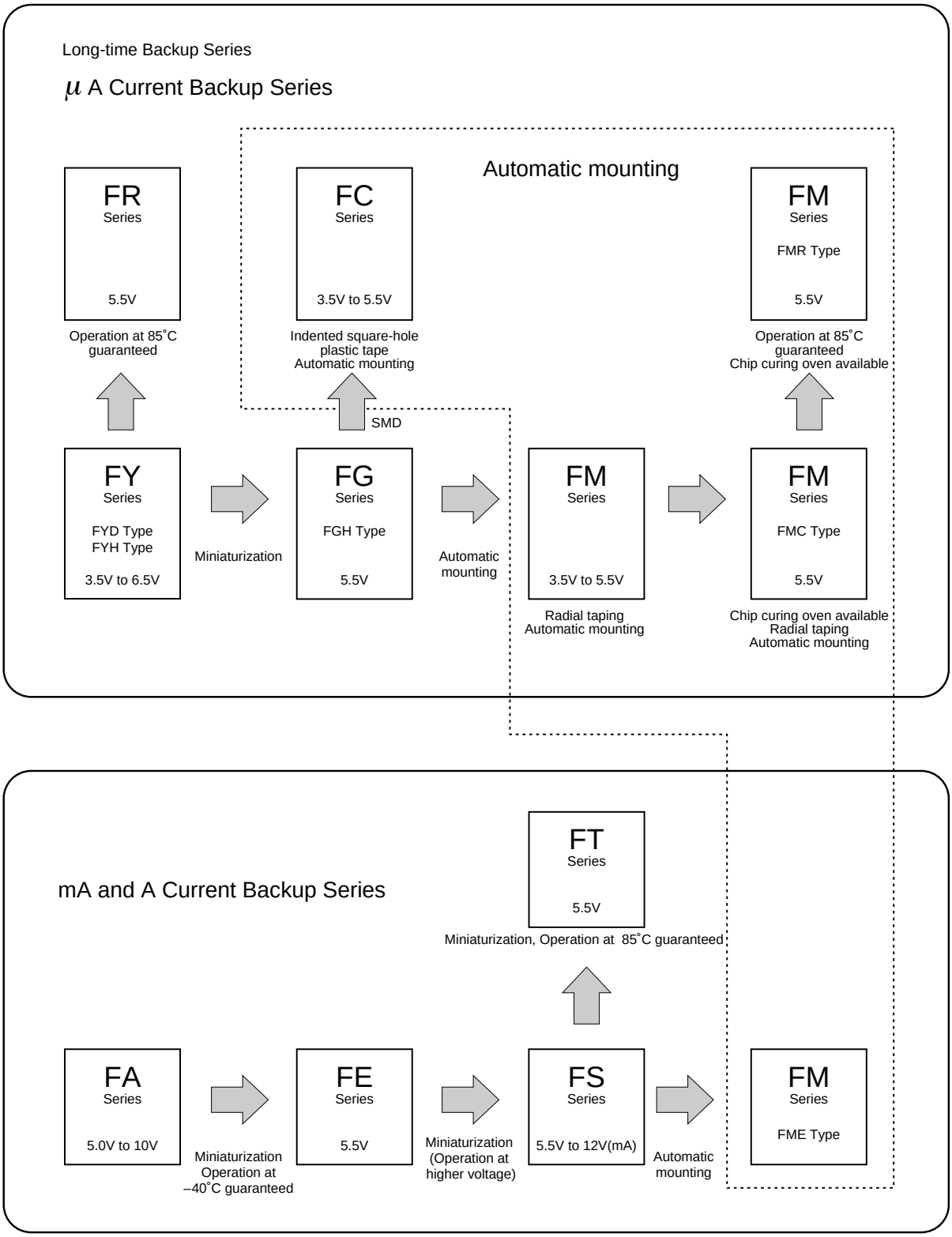

Backup Performance For Selection

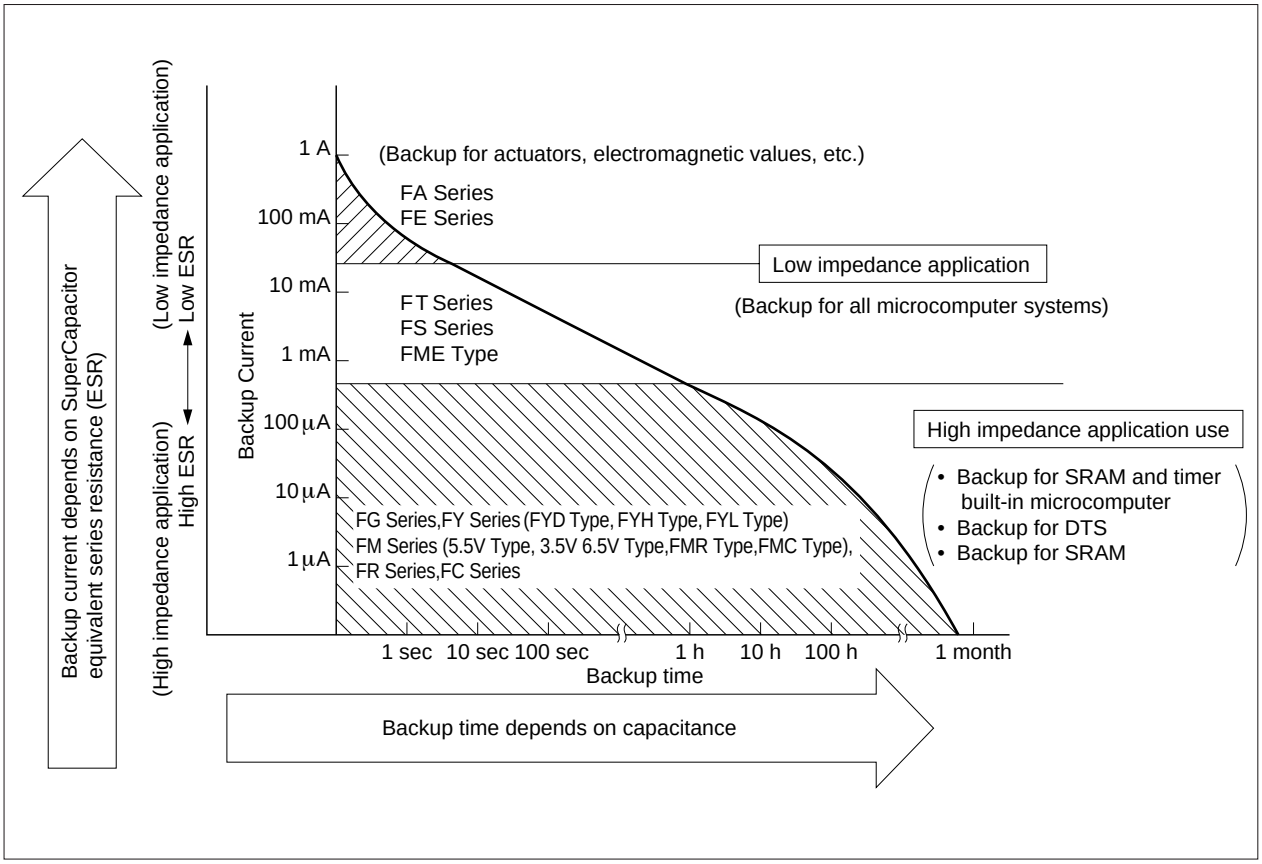

Description

The Super Capacitor is the most outstanding capacitor concept to appear in the past decade. The large capacitance, slow rate of discharge and small package make it useful as a non-battery reserve power source that can provide currents (1-100 mA) and protect microcomputers from power shutdowns lasting several seconds.

It is also useful for maintaining the contents of low dissipation volatile memories (i.e. CMOS) for several months. (For more detailed applications, refer to the table shown below.)

The operating principle of the Super Capacitor is based on an electric double layer appearing at the interface between activated carbon particles and sulfuric acid solution as electrolyte. The two electrodes are separated by an ionically conducting but electrically insulating porous membrane.

Conductive rubber membranes contain the electrode and electrolyte material and make contact to the cell. Several cells are stacked in series to achieve the 5.5 V and 11 V rated voltages.

Since the Super Capacitor exhibit relatively high ESR, it is not recommended for ripple absorption in DC power supply applications.

In some manufacturing operations it has been polarized with the following voltage direction.

Shorter lead:	Positive
Longer lead (connected to case):	N egative

Therefore, the use of the Super Capacitor in that direction is recommended in actual usage.

Typical Applications

The following table shows typical applications categorized by the functions and the magnitude of back-up current required.

FUNCTIONS	BACKUP CURRENT	APPLICATIONS	EQUIPMENT	ADEOUATE SERIES
Large current supply	Up to 1 A	Actuator applications (Large current in a short period)	Actuators Relay/Solenoid starter Igniters	FA and FE series
		Primary power supply for LED displays, toys, electric buzzers, etc.	Handheld toys Displays, Smoke detectors, Alarm devices, Emergency display	
Medium capacity power supply	Up to 50 mA	Secondary power source for undesirable voltage drops	Car radio back-up at the engine start, etc.	FT series FS series 3.5 V•6.5 V series (FSH) FME type
		Motor Start	VCR, Video disk Record player	
Power backup for primary power outages	Less than 500 μA	CMOS Microcomputers	Phones (Memory dial, Auto-answering) Electric cash registers Electric typewriters Computer terminals Automatic measuring instruments, etc.	FC series FY series FYD Type FYH Type FYL Type 3.5 V•6.5 V Series (FYD) FM series FG series
		CMOS RAMs ICs for Clocks	Digital tuning audio system (LW-MW-FM Radio, Car Radio, Stereo, etc.) Programmable consumer electronic products (VCR, Microwave overun, Games, etc.)	
		• CMOS RAMs ICs for Clocks • High operating temperature (85°C)	Measuring instruments Automatic control Communications Car	FR series

Other Applications

Programmable Thermostat, Copiers, Vending Machines, Automatic Electricity Counters, Traffic Signals, Taxi Meters, Fuel Management Systems, Process Monitoring or Control, Satellite Communications, Portable "Battery" Operated Equipment, Fare Collection System, POS Terminals, Mail Sorters, Scale, Flow Metering, Eiectronic Slot Machines, Water Heat Controllers.

FC Series

Features

- Enables surface mounting.
- High rated voltage of 5.5V.
- High reliability solution leakage.

Applications

- Subsidiary power supply.
  Buck up power supply line.
  Memory backup during battery exchange.

Dimensions

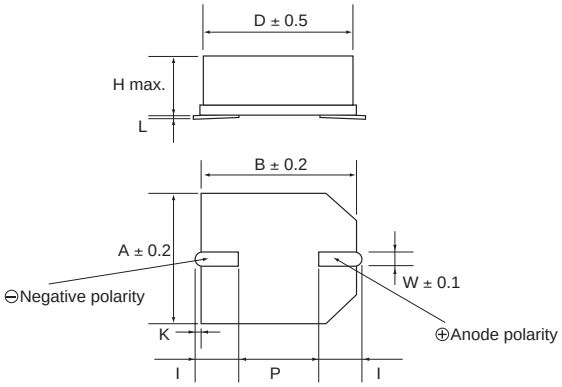

Markings

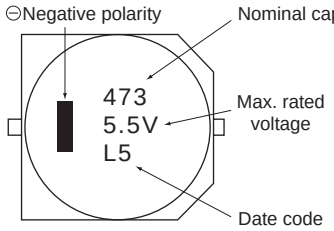

FC0H473ZTBR24
FC0H104ZTBR24
FC0H224ZTBR24
FC0V104ZTBR24
FC0V224ZTBR24
FC0V474ZTBR24

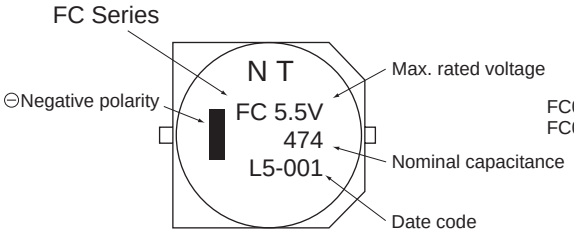

FC0H474ZTBR32
FC0H105ZTBR44

Standard Rating

Part Number	Max. Rated Voltage (Vdc)	Nominal Capacitance Discharge system (F)	Max. ESR (at 1kHz) (Ω)	Max. current at 30 minutes (mA)	Voltage Holding Characteristic Min. (V)	Dimension (Unit:mm)								
						D	H	A	B	I	W	P	K	L
FC0H473ZTBR24	5.5	0.047	50	0.071	4.2	10.5	5.5	10.8	10.8	3.6±0.5	1.2	5.0	0.7±0.2	$0^{+0.3}_{-0.1}$
FC0H104ZTBR24	5.5	0.10	25	0.15	4.2	10.5	5.5	10.8	10.8	3.6±0.5	1.2	5.0	0.7±0.2	$0^{+0.3}_{-0.1}$
FC0H224ZTBR24	5.5	0.22	25	0.33	4.2	10.5	8.5	10.8	10.8	3.6±0.5	1.2	5.0	0.7±0.2	$0^{+0.3}_{-0.1}$
FC0H474ZTBR32	5.5	0.47	13	0.71	4.2	16.0	9.5	16.3	16.3	6.8±1.0	1.2	5.0	1.2±0.35	$0^{+0.5}_{-0.1}$
FC0H105ZTBR44	5.5	1.00	7	1.50	4.2	21.0	10.5	21.6	21.6	7.0±1.0	1.4	10.0	1.2±0.35	$0^{+0.5}_{-0.1}$
FC0V104ZTBR24	3.5	0.10	50	0.090	–	10.5	5.5	10.8	10.8	3.6±0.5	1.2	5.0	0.7±0.2	$0^{+0.3}_{-0.1}$
FC0V224ZTBR24	3.5	0.22	25	0.20	–	10.5	5.5	10.8	10.8	3.6±0.5	1.2	5.0	0.7±0.2	$0^{+0.3}_{-0.1}$
FC0V474ZTBR24	3.5	0.47	25	0.42	–	10.5	8.5	10.8	10.8	3.6±0.5	1.2	5.0	0.7±0.2	$0^{+0.3}_{-0.1}$

Precautions for use

- This capacitor is exclusive use of reflow soldering.
  It's designed for thermal conduction system such as infrared ray (IR) or heat blow.
  For applying other methods, Please consult with us first.
- Graph attheleft,"Reflow Condition" indicares the surface temperature at the top of capacitor.

- Reflow Condition

Reflow Profile

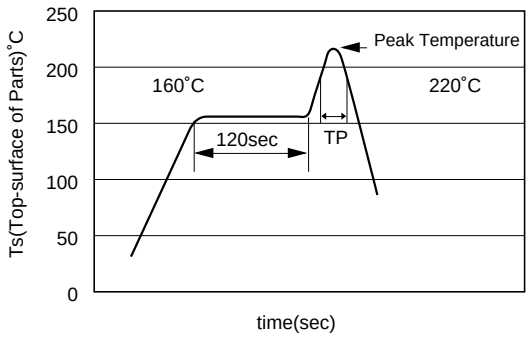

Tape and Reel Dimensions

[Reel Dimensions]

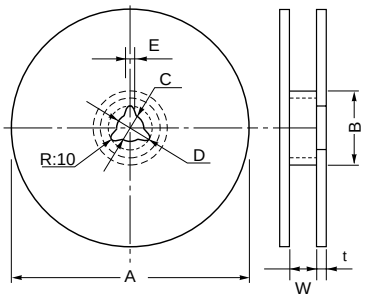

(mm)

Mark	TBR24		TBR32	TBR44
A	380±2		330±2	380±2
B	Product height 5.5mm	80±1	100±1	100±1
	Product height 8.5mm	100±1		
C	13±0.5		13±0.5	13±0.5
D	21±0.8		21±0.8	21±0.8
E	2±0.5		2±0.5	2±0.5
W	25.5±0.5		32.5±0.5	44.5±0.5
t	Product height 5.5mm	3.0	2.8	2.8
	Product height 8.5mm	2.8		

Dimensions of indented [square-hole plastic tape]

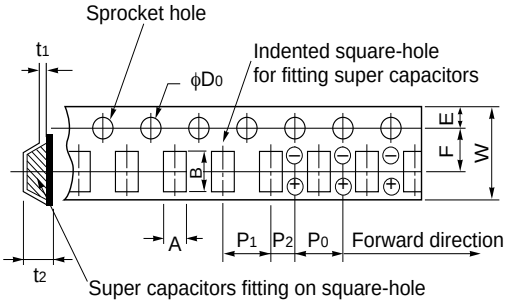

(mm)

Mark	TBR24	TBR32	TBR44
W	24.0	32.0	44.0
A	11.4	18.0	23.0
B	13.0	20.0	25.0
P_0	4.0	4.0	4.0
P_1	16.0	24.0	32.0
P_2	2.0	2.0	2.0
F	11.5	14.2	20.2
ϕD_0	1.55	1.55	1.55
t_1	0.4	0.5	0.5
E	1.75	1.75	1.75
t_2	5.8	10.0	12.0

Number of pachaged Super capacitors

Part Number	Packaging
FC0H473ZTBR24	1000pcs./reel
FC0H104ZTBR24	1000pcs./reel
FC0H224ZTBR24	500pcs./reel
FC0H474ZTBR32	200pcs./reel
FC0H105ZTBR44	150pcs./reel
FC0V104ZTBR24	1000pcs./reel
FC0V224ZTBR24	1000pcs./reel
FC0V474ZTBR24	500pcs./reel

Specifications 5.5V Type

Item		Standard		Test Conditions conforming to JIS C 5102-1994
Operating Temperature Range		–25°C to +70˚C		
Maximum Operating Voltage		5.5 VDC		
Nominal Capacitance Range		0.047 to 1.0F		See characteristics measuring method.
Capacitance Allowance		+80%, –20%		See characteristics measuring method.
Equivalent Series Resistance		See standard list		See characteristics measuring method.
Current (30-minutes value)		See standard list		See characteristics measuring method.
*Surge Voltage20		Capacitance	More than 90% of initial requirement	Conforms to 7.14 Surge Voltage: 6.3 V(5.5V products) Temperature: 70±2˚C Charge: 30 sec. Discharge: 9 min. 30 sec. Number of cycles 1000 cycles. Charge resistance: 0.047F 300 Ω Discharge resistance: 0 Ω
		Equivalent series resistance	Not to exceed 120% of initial requirement	
		Current (30-minute value)	Not to exceed 120% of initial requirement	
		Appearance	No obvious abnormality	
*Temperature Variation of Characteristics	Phase 2	Capacitance	50% or higher of initial value	Conforms to 7.12 Phase 1: +25 ± 2°C Phase 2: –25 ± 2°C Phase 3: –40 ± 2°C Phase 4: +25 ± 2°C Phase 5: +70 ± 2°C Phase 6: +25 ± 2°C
		Equivalent series resistance	4 or less times initial value	
	Phase 5	Capacitance	200% or below of initial value	
		Equivalent series resistance	Satisty initial standard value	
		Current (30-minute value)	1.5 CV (mA) or below	
	Phase 6	Capacitance	Within ±20% of initial value	
		Equivalent series resistance	Satisty initial standard value	
		Current (30-minute value)	Satisty initial standard value	
*Vibration Resistance		Capacitance	Satisty initial standard value	Conforms to 8.2.3 Frequency : 10 to 55 Hz Test duration : 6 hours
		Equivalent series resistance		
		Current (30-minute value)		
		Appearance	No obvious abnormality	
*Soldering Heat Resistance		Capacitance	Satisty initial standard value	Conforms to 8.5 Solder temperature: 260±10°C Dipping duration: 10±1 sec. Dipped up to 1.6 mm from the lower end of the capacitor.
		Equivalent series resistance		
		Current (30-minute value)		
		Appearance	No obvious able abnormality	
*Temperature Cycle		Capacitance	Satisty initial standard value	Conforms to 9.3 Temperature condition: –25°C → normal temperature → +70°C → normal temperature Number of cycles: 5 cycles
		Equivalent series resistance		
		Current (30-minute value)		
		Appearance	No obvious abnormality	
*Humidity Resistance		Capacitance	Within 20% of initial value	Conforms to 9.5 Temperature: 40±2°C Relative humidity: 90 to 95% RH Test duration: 240±8 hours
		Equivalent series resistance	1.2 or less times initial standard value	
		Current (30-minute value)	1.2 or less times initial standard value	
		Appearance	No obuious abnormality	
*High Temperature Load		Capacitance	Within 30% of initial value	Conforms to 9.10 Temperature: 70±2°C Voltage applied: 5.5 Vdc Series protection resistance: 0 Ω Test duration: 1000^{+48}_{0} hours
		Equivalent series resistance	Twice or less times initial standard value	
		Current (30-minute value)	Twice or less times initial standard value	
		Appearance	No obvious abnormality	
*Voltage Holding Characteristics (Self Dischage)		Voltage between terminal leads higher than 4.2 V		Charging condition: Voltage applied: 5.0 VDC Series resistance: 0 Ω Charging time: 24hours Storage: Time: 24hours Temperature:Lower than 25°C

* The characteristics above must be satisfied for asterisked items after the end of reflow soldering (according to the reflow condition shown on page).

Specifications 3.5V Type

Item		Standard		Test Conditions conforming to JIS C 5012-1994
Operating Temperature Range		–25°C to +70°C		
Maximum Operating Voltage		3.5 VDC		
Nominal Capacitance Range		0.010 to 0.47F		See characteristics measuring method.
Capacitance Allowance		+80%, –20%		See characteristics measuring method.
Equivalent Series Resistance		See standard list		See characteristics measuring method.
Current (30-minutes value)		See standard list		See characteristics measuring method.
*Surge Voltage		Capacitance	More than 90% of initial requirement	Conforms to 7.14 Surge Voltage: 4.0 V(3.5V products) Temperature: 70 ± 2°C Charge: 30 sec. Discharge: 9 min. 30 sec. Number of cycles 1000 cycles. Charge resistance : 0.10F 150 Ω : 0.22F 56 Ω : 0.47F 30 Ω : 1.0F 15 Ω Discharge resistance: 0 Ω
		Equivalent series resistance	Not to exceed 120% of initial requirement	
		Current (30-minute value)	Not to exceed 120% of initial requirement	
		Appearance	No obvious abnormality	
*Temperature Variation of Characteristics	Phase 2	Capacitance	50% or higher of initial value	Conforms to 7.12 Phase 1: +25 ± 2°C Phase 2: –25 ± 2°C Phase 3: –40 ± 2°C Phase 4: +25 ± 2°C Phase 5: +70 ± 2°C Phase 6: +25 ± 2°C
		Equivalent series resistance	4 or less times initial value	
	Phase 5	Capacitance	200% or below of initial value	
		Equivalent series resistance	Satisty initial standard value	
		Current (30-minute value)	1.5 CV (mA) or below	
	Phase 6	Capacitance	Within ±20% of initial value	
		Equivalent series resistance	Satisty initial standard value	
		Current (30-minute value)	Satisty initial standard value	
*Vibration Resistance		Capacitance	Satisty initial standard value	Conforms to 8.2.3 Frequency : 10 to 55 Hz Test duration : 6 hours
		Equivalent series resistance		
		Current (30-minute value)		
		Appearance	No obvious abnormality	
*Soldering Heat Resistance		Capacitance	Satisty initial standard value	Conforms to 8.5 Solder temperature: 260 ± 10°C Dipping duration: 10 ± 1 sec. Dipped up to 1.6 mm from the lower end of the capacitor.
		Equivalent series resistance		
		Current (30-minute value)		
		Appearance	No obvious able abnormality	
*Temperature Cycle		Capacitance	Satisty initial standard value	Conforms to 9.3 Temperature condition: –25°C → normal temperature → +70°C → normal temperature Number of cycles: 5 cycles
		Equivalent series resistance		
		Current (30-minute value)		
		Appearance	No obvious abnormality	
*Humidity Resistance		Capacitance	Within 20% of initial value	Conforms to 9.5 Temperature: 40 ± 2°C Relative humidity: 90 to 95% RH Test duration: 240 ± 8 hours
		Equivalent series resistance	1.2 or less times initial standard value	
		Current (30-minute value)	1.2 or less times initial standard value	
		Appearance	No obuious abnormality	
*High Temperature Load		Capacitance	Within 30% of initial value	Conforms to 9.10 Temperature: 70 ± 2°C Voltage applied: 3.5 Vdc Series protection resistance: 0 Ω Test duration: 1000^{+48}_{0} hours
		Equivalent series resistance	Twice or less times initial standard value	
		Current (30-minute value)	Twice or less times initial standard value	
		Appearance	No obvious abnormality	

* The characteristics above must be satisfied for asterisked items after the end of reflow soldering (according to the reflow condition shown on page).

FT Series

The FT series Super Capacitors are ideal as short-time (30 minutes max.) backup devices in small and lightweight systems. 5.5 VDC (0.10 F to 5.6 F)

Features

- Ideal for supplying current of several hundred μA to several mA for short time

Applications

- Backup source for microcomputers and buffer for momentary high-current loads (for example, motors)

Part Number System

FT 0H 473 Z

- **Z** — Capacitance tolerance: +80%, –20%
- **473** — Capacitance: 0.047 F
  First two digits represent significant figures.
  Third digit specifies number of zeros to follow microfarad code.
- **0H** — Maximum rated voltage
  0H: 5.5 VDC
- **FT** — Super Capacitor: FT series

Markings

Markings are made with black ink on the green sleeve.

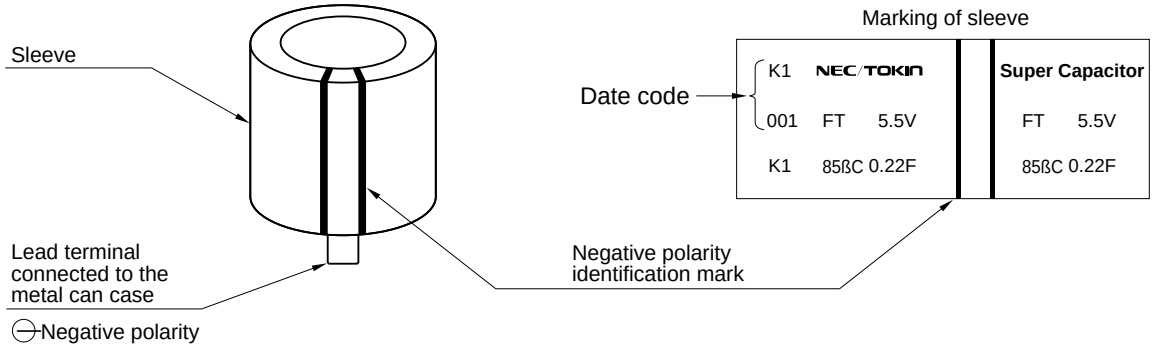

Dimensions and Standard Ratings

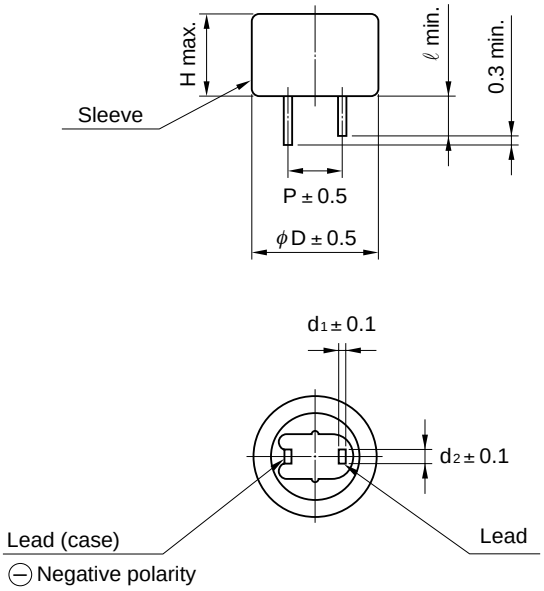

Part No.	Dimensions mm (inch)						Weight (g) (oz)
	D	H	P	d_1	d_2	ℓ	
FT0H104Z	11.5 (0.453)	8.5 (0.335)	5.08 (0.2)	0.4 (0.016)	1.2 (0.047)	2.7 (0.106)	1.6 (0.057)
FT0H224Z	14.5 (0.57)	12.0 (0.47)	5.08 (0.2)	0.4 (0.016)	1.2 (0.047)	2.2 (0.087)	4.1 (0.145)
FT0H474Z	16.5 (0.65)	13.0 (0.512)	5.08 (0.2)	0.4 (0.016)	1.2 (0.047)	2.7 (0.106)	5.3 (0.187)
FT0H105Z	21.5 (0.85)	13.0 (0.512)	7.62 (0.3)	0.6 (0.024)	1.2 (0.047)	3.0 (0.118)	10.0 (0.353)
FT0H225Z	28.5 (1.12)	14.0 (0.55)	10.16 (0.4)	0.6 (0.024)	1.4 (0.055)	6.1 (0.240)	18.0 (0.635)
FT0H335Z	36.5 (1.44)	15.0 (0.588)	15.00 (0.59)	0.6 (0.024)	1.7 (0.067)	6.1 (0.240)	38.0 (1.34)
FT0H565Z	44.5 (1.75)	17.0 (0.67)	20.00 (0.79)	1.0 (0.039)	1.4 (0.055)	6.1 (0.240)	72.0 (2.54)

Note: Weight is typical.

Part Number	Max. Rated Voltage (V)	Nomial Capacitance Charge System (F)	Nomial Capacitance Discharge System (F)	Max. ESR (at 1 kHz) (Ω)	Max. Current at 30 minutes (mA)
FT0H104Z	5.5	0.10	0.14	less than 16	less than 0.15
FT0H224Z	5.5	0.22	0.28	less than 10	less than 0.33
FT0H474Z	5.5	0.47	0.60	less than 6.5	less than 0.71
FT0H105Z	5.5	1.0	1.3	less than 3.5	less than 1.5
FT0H225Z	5.5	2.2	2.8	less than 1.8	less than 3.3
FT0H335Z	5.5	3.3	4.2	less than 1.0	less than 5.0
FT0H565Z	5.5	5.6	7.2	less than 0.6	less than 8.4

Specifications

Item		Specification		Test Conditions conforming to JIS C 5102-1994
Operating Temperature Range		–40˚C to +85˚C		
Maximum Operating Voltage		5.5 Vdc		
Nominal Capacitance Range		0.1 to 5.6 F (Refer to standard ratings)		
Capacitance Allowance		+80 %, –20 %		See characteristics measuring conditions
Equivalent Series Resistance		See standard list		See characteristics measuring conditions
Current (30-minute value)		See standard list		See characteristics measuring conditions
Surge Voltage		Capacitance	More than 90 % of initial requirement	At 85˚C Surge voltage 6.3 V Charge: 30 sec. Discharge: 9 min. 30 sec. 1000 cycles Charge resistance: 0.10 F 150 Ω 0.22 F 56 Ω 0.47 F 30 Ω 1.0 F 15 Ω 2.2 F 10 Ω 3.3 F 10 Ω 5.6 F 10 Ω Discharge resistance: Not applicable (0 Ω)
		Equivalent Series Resistance	Not to exceed 120 % of initial requirement	
		Current at 30 minutes	Not to exceed 120 % of initial requirement	
Temperature Variation of Characteristics	Phase 2	Capacitance	More than 50 % of initial value	Conforms to 7.12 Phase 1: +25 ±2˚C Phase 2: –25 ±2˚C Phase 3: –40 ±2˚C Phase 4: +25 ±2˚C Phase 5: +85 ±2˚C Phase 6: +25 ±2˚C
		Equivalent Series Resistance	Not to exceed 3 times initial value	
	Phase 3	Capacitance	More than 30 % of initial value	
		Equivalent Series Resistance	Not to exceed 7 times initial value	
	Phase 5	Capacitance	Not to exceed 150 % of initial value	
		Equivalent Series Resistance	Not to exceed initial requirement	
		Current at 30 minutes	Not to exceed 1.5 CV (mA)	
	Phase 6	ΔC/C	Within ±20 % of initial value	
		Equivalent Series Resistance	Not to exceed initial requirement	
		Current at 30 minutes	Not to exceed initial requirement	
Lead Strength (Tensile)		No loosening nor permanent damage of the leads		Conforms to 8.1.2(1) 0.022 to 0.47 F: 1 kg, 10 sec. 1 F: 2.5 kg, 10 sec.
Vibration Resistance		Capacitance	Meet initial requirement	Conforms to 8.2.3 Frequency: 10 to 55 Hz Test duration: 6 hours
		Equivalent Series Resistance	Meet initial requirement	
		Current at 30 minutes	Meet initial requirement	
Solderability		3/4 or more of the pin surface should be covered with new solder		Conforms to 8.4 230 ±5˚C 5 ±0.5 sec. 1.6 mm from body
Soldering Heat Resistance		Capacitance	Meet initial requirement	Conforms to 8.5 260 ±10˚C, 10 ±1 sec. Immersion depth: 1.6 mm from body
		Equivalent Series Resistance	Meet initial requirement	
		Current at 30 minutes	Meet initial requirement	
Temperature Cycle		Capacitance	Meet initial requirement	Conforms to 9.3 Temperatuve condition: –40˚C → Normal temperature → +85˚C→ Normal temperature Number of cycles : 5 cycles
		Equivalent Series Resistance	Meet initial requirement	
		Current at 30 minutes	Meet initial requirement	
Humidity Resistance		Capacitance	Within ±20% of initial value	Conforms to 9.5 40 ±2˚C, 90 to 95% RH 240 ± 8 hours
		Equivalent Series Resistance	Not to exceed120 % of initial requirement	
		Current at 30 minutes	Not to exceed120 % of initial requirement	
High temperature Load		Capacitance change	Within ±30% of initial value	Conforms to 9.10 Temperature: 85 ± 2˚C Series resistance: 0 Ω Applied voltage: 5.5 VDC Time of test: 1000 hours
		Equivalent Series Resistance	Not to exceed 200% of initial requirement	
		Current at 30 minutes	Not to exceed 200% of initial requirement	

FG Series

The FG series includes small-size electric double-layer capacitors with excellent voltage holding characteristics. The FG series are ideal as long-time backup devices for minute-current loads in small and lightweight systems.

Features

- The volume of the products is approx. 1/2 that of the FYD type products. (0.22F~2.2F)
- Added 4.7F/5.5V to series.
- Miniaturized 0.047F/5.5V and 0.10F/5.5V

Applications

- Backup of CMOS microprocessors, static RAMs, DTSs (digital tuning systems)
- Memory backup of remote controllers and handy cassette player during battery exchange

Part Number System

FG 0H 473 Z

- **Z** — Capacitance tolerance:
  Z: +80%, –20%
- **473** — Capacitance: 0.047 F
  First two digits represent significant figures.
  Third digit specifies number of zeros to follow μF code.
- **0H** — Maximum rated voltage
  0H: 5.5 VDC
- **FG** — Super Capacitor: FG series

Markings

Markings are made with black ink on the green sleeve.

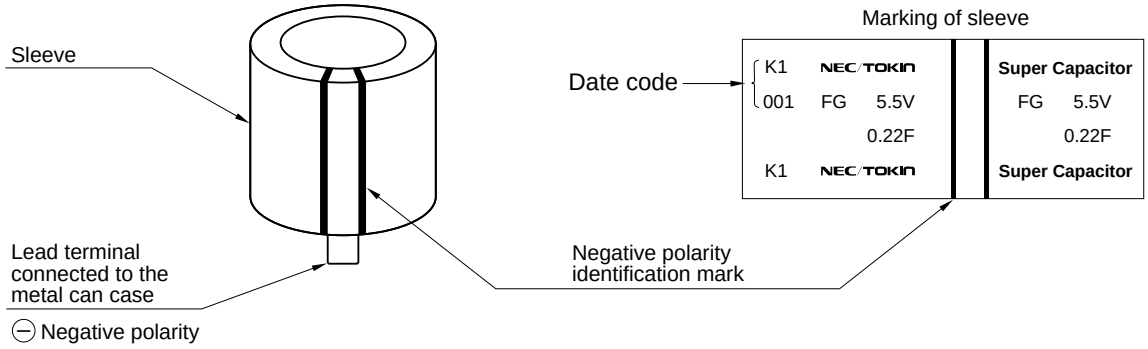

Dimensions and Standard Ratings

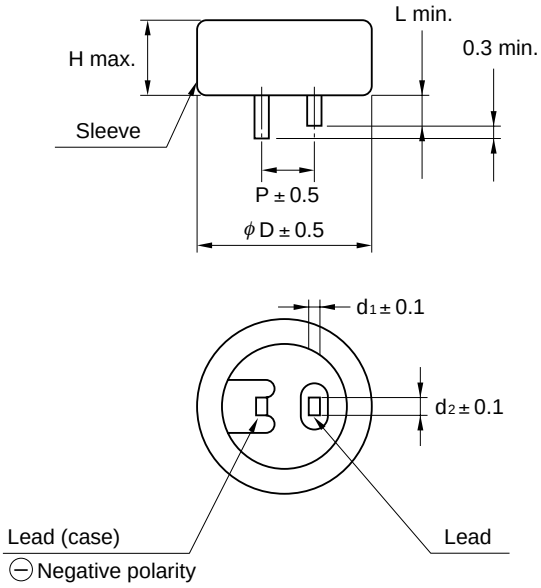

Part No.	Dimensions mm (inch)						Weight
	D	H	P	d_1	d_2	L	g (oz)
FG0H103Z	11.0 (0.43)	5.5 (0.215)	5.08 (0.200)	0.2 (0.016)	1.2 (0.047)	2.7 (0.106)	0.9 (0.032)
FG0H223Z	11.0 (0.43)	5.5 (0.215)	5.08 (0.200)	0.2 (0.016)	1.2 (0.047)	2.7 (0.106)	1.0 (0.035)
FG0H473Z	11.0 (0.43)	5.5 (0.215)	5.08 (0.200)	0.2 (0.016)	1.2 (0.047)	2.7 (0.106)	1.0 (0.035)
FG0H104Z	11.0 (0.43)	6.5 (0.256)	5.08 (0.200)	0.2 (0.016)	1.2 (0.047)	2.7 (0.106)	1.3 (0.046)
FG0H224Z	13.0 (0.512)	9.0 (0.355)	5.08 (0.200)	0.4 (0.016)	1.2 (0.047)	2.2 (0.087)	2.5 (0.088)
FG0H474Z	14.5 (0.571)	18.0 (0.709)	5.08 (0.200)	0.4 (0.016)	1.2 (0.047)	2.4 (0.095)	5.1 (0.180)
FG0H105Z	16.5 (0.65)	19.0 (0.749)	5.08 (0.200)	0.4 (0.016)	1.2 (0.047)	2.7 (0.106)	7.0 (0.247)
FG0H225Z	21.5 (0.85)	19.0 (0.749)	7.62 (0.300)	0.6 (0.024)	1.2 (0.047)	3.0 (0.118)	12.1 (0.427)
FG0H475Z	28.5 (1.122)	22.0 (0.867)	10.16 (0.400)	0.6 (0.024)	1.4 (0.055)	6.1 (0.240)	27.3 (0.964)

Note: Weight is typical.

Part Number	Max. Rated Voltage (V)	Nomial Capacitance		Max. ESR (at 1 kHz) (Ω)	Max. Current at 30 minutes (mA)	Voltage Holding Characteristic Min.(V)
		Charge System (F)	Discharge System (F)			
FG0H103Z	5.5	0.01	0.013	300	0.015	4.2
FG0H223Z	5.5	0.022	0.028	200	0.033	4.2
FG0H473Z	5.5	0.047	0.060	200	0.071	4.2
FG0H104Z	5.5	0.10	0.13	100	0.15	4.2
FG0H224Z	5.5	0.22	0.28	100	0.33	4.2
FG0H474Z	5.5	0.47	0.60	120	0.71	4.2
FG0H105Z	5.5	1.0	1.3	65	1.5	4.2
FG0H225Z	5.5	2.2	2.8	35	3.3	4.2
FG0H475Z	5.5	4.7	6.0	35	7.1	4.2

Specifications

Items		Standard		Test Conditions Conforming to JIS C 5102-1994
Operating Temperature Range		–25˚C to +70˚C		
Maximum Operating Voltage.		5.5 Vdc		
Nominal Capacitance Range		0.010 to 4.7 F		See characteristics measuring method
Capacitance Allowance		+80 %, –20 %		See characteristics measuring method
Equivalent Series Resistance		See standard list		See characteristics measuring method
Current (30-minute value)		See standard list		See characteristics measuring method
Surge Voltage		Capacitance	More than 90% of initial requirement	Conforms to 7.14 Surge voltage: 6.3V Temperature: 70±2˚C Charge: 30 sec. Discharge: 9 min 30 sec. Number of cycles: 1000 cycles Series resistance: 0.010F: 1500 Ω 0.47F: 30 Ω 0.022F: 560 Ω 1.0F: 15 Ω 0.047F: 300 Ω 2.2F: 10 Ω 0.10F: 150 Ω 4.7F: 10 Ω 0.22F: 56 Ω Discharge resistance: 0 Ω
		Equivalent series resistance	Not to exceed 120% of initial requirement	
		Current at 30 min.	Not to exceed 120% of initial requirement	
		Appearance	No obvious abnormality	
Temperature Variation of Characteristics	Phase 2	Capacitance	50% or higher of initial value	Conforms to 7.12 Phase 1: +25 ±2˚C Phase 2: –25 ±2˚C Phase 3: –40 ±2˚C Phase 4: +25 ±2˚C Phase 5: +70 ±2˚C Phase 6: +25 ±2˚C
		Equivalent series resistance	4 or less times initial value	
	Phase 5	Capacitance	200% or below of initial value	
		Equivalent series resistance	Satisfy initial standard value	
		Current at 30 min.	1.5 CV (mA) or below	
	Phase 6	Capacitance	Within ±20% of initial value	
		Equivalent series resistance	Satisfy initial standard value	
		Current at 30 min.	Satisfy initial standard value	
Lead Strength (Tensile)		No loosening nor permanent damage of the leads		Conforms to 8.1.2 (1)
Vibration Resistance		Capacitance	Meet initial standard value	Conforms to 8.2.3 (1) Frequency: 10 to 55 Hz Test duration: 6 hours
		Equivalent series resistance		
		Current at 30 min.		
		Appearance	No obvious abnormality	
Solderability		3 / 4 or more of the pin surface should be covered with new solder		Conforms to 8.4 Solder temperature: 230±5˚C Dipping duration: 5±0.5 sec. Should be dipped up to 1.6mm from the lower end of the capacitor
Soldering Heat Resistance		Capacitance	Should satisfy initial standard value	Conforms to 8.5 Solder temperature: 260±10˚C Dipping duration: 10±1 sec. Should be dipped up to 1.6mm from the lower end of the capacitor
		Equivalent series resistance		
		Current at 30 min.		
		Appearance	No obvious abnormality	
Temperature Cycle		Capacitance	Satisfy initial standard value	Conforms to 9.3 Temperature: –25˚C → normal temperature → +70˚C → normal temperature Number of cycles: 5 cycles
		Equivalent series resistance		
		Current at 30 min.		
		Appearance	No obvious abnormality	
Humidity Resistance		Capacitance	Within ±20% of initial value	Conforms to 9.5 Temperature: 40±2˚C Relative humidity: 90 to 95% RH Test duration: 240 ±8hours
		Equivalent series resistance	1.2 or less times initial standard value	
		Current at 30 min.	1.2 or less times initial standard value	
		Appearance	No obvious abnormality	
High Temperature Load		Capacitance	Within ±30% of initial value	Conforms to 9.10 Temperature: 70±2˚C Voltage applied: 5.5Vdc Series protection resistance: 0Ω Test duration: 1000^{+48}_{0} hours
		Equivalent series resistance	Twice or less times initial standard value	
		Current at 30 min.	Twice or less times initial standard value	
		Appearance	No obvious abnormality	
Voltage Holding Characteristics (Self Discharge)		Voltage between terminal leads higher than 4.2V		Charging Condition: Voltage applied: 5.0VDC (with case side terminal negative) Series resistance: 0Ω Charging time: 24 hours Storage: Time: 24 hours Temperature: Lower than 25˚C Humidity: Lower than 70%RH

● **FGH Type**

Dimensions and Standard Ratings

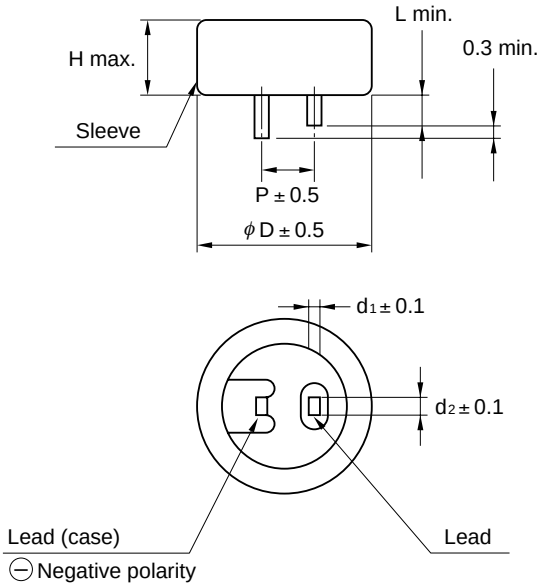

Part No.	Dimensions mm						Weight
	D	H	P	d_1	d_2	L	g
FGH0H104Z	11.0	5.5	5.08	0.2	1.2	2.7	1.0
FGH0H224Z	11.0	7.0	5.08	0.2	1.2	2.7	1.3
FGH0H474Z	16.5	8.0	5.08	0.4	1.2	2.7	4.1
FGH0H105Z	21.5	9.5	7.62	0.6	1.2	3.0	7.2

Note: Weight is typical.

Part Number	Max. Rated Voltage (V)	Nomial Capacitance		Max. ESR (at 1 kHz) (Ω)	Max. Current at 30 minutes (mA)	Voltage Holding Characteristic Min.(V)
		Charge System (F)	Discharge System (F)			
FGH0H104Z	5.5	–	0.10	100	0.15	4.2
FGH0H224Z	5.5	–	0.22	100	0.33	4.2
FGH0H474Z	5.5	–	0.47	65	0.71	4.2
FGH0H105Z	5.5	–	1.0	35	1.5	4.2

Specifications FGH Type

Items		Standard		Test Conditions Conforming to JIS C 5102-1994	
Operating Temperature Range		–25˚C to +70˚C			
Maximum Operating Voltage.		5.5 Vdc			
Nominal Capacitance Range		0.10 to 1.0 F		See characteristics measuring method	
Capacitance Allowance		+80 %, –20 %		See characteristics measuring method	
Equivalent Series Resistance		See standard list		See characteristics measuring method	
Current (30-minute value)		See standard list		See characteristics measuring method	
Surge Voltage		Capacitance	More than 90% of initial requirement	Conforms to 7.14 Surge voltage: 6.3V Temperature: 70±2˚C Charge: 30 sec. Discharge: 9 min 30 sec. Number of cycles: 1000 cycles Series resistance: 0.010F: 1500 Ω 0.47F: 30 Ω 0.022F: 560 Ω 1.0F: 15 Ω 0.047F: 300 Ω 2.2F: 10 Ω 0.10F: 150 Ω 4.7F: 10 Ω 0.22F: 56 Ω Discharge resistance: 0 Ω	
		Equivalent series resistance	Not to exceed 120% of inital requirement		
		Current at 30 min.	Not to exceed 120% of inital requirement		
		Appearance	No obvious abnormality		
Temperature Variation of Characteristics	Phase 2	Capacitance	50% or higher of initial value	Conforms to 7.12 Phase 1: +25±2˚C Phase 2: –25±2˚C Phase 3: –40±2˚C Phase 4: +25±2˚C Phase 5: +70±2˚C Phase 6: +25±2˚C	
		Equivalent series resistance	4 or less times initial value		
	Phase 5	Capacitance	200% or below of initial value		
		Equivalent series resistance	Satisfy initial standard value		
		Current at 30 min.	1.5 CV (mA) or below		
	Phase 6	Capacitance	Within ±20% of initial value		
		Equivalent series resistance	Satisfy initial standard value		
		Current at 30 min.	Satisfy initial standard value		
Lead Strength (Tensile)		No loosening nor permanent damage of the leads		Conforms to 8.1.2 (1)	
Vibration Resistance		Capacitance	Meet initial standard value	Conforms to 8.2.3 Frequency: 10 to 55 Hz Test duration: 6 hours	
		Equivalent series resistance			
		Current at 30 min.			
		Appearance	No obvious abnormality		
Solderability		3 / 4 or more of the pin surface should be covered with new solder		Conforms to 8.4 Solder temperature: 230±5˚C Dipping duration: 5±0.5 sec. Should be dipped up to 1.6mm from the lower end of the capacitor	
Solder Heat Resistance		Capacitance	Should satisfy initial standard value	Conforms to 8.5 Solder temperature: 260±10˚C Dipping duration: 10±1 sec. Should be dipped up to 1.6mm from the lower end of the capacitor	
		Equivalent series resistance			
		Current at 30 min.			
		Appearance	No obvious abnormality		
Temperature Cycle		Capacitance	Satisfy initial standard value	Conforms to 9.3 Temperature: –25˚C → normal temperature → +70˚C → normal temperature Number of cycles: 5 cycles	
		Equivalent series resistance			
		Current at 30 min.			
		Appearance	No obvious abnormality		
Humidity Resistance		Capacitance	Within ±20% of initial value	Conforms to 9.5 Temperature: 40±2˚C Relative humidity: 90 to 95% RH Test duration: 240 ±8hours	
		Equivalent series resistance	1.2 or less times initial standard value		
		Current at 30 min.	1.2 or less times initial standard value		
		Appearance	No obvious abnormality		
High Temperature Load		Capacitance	Within ±30% of initial value	Conforms to 9.10 Temperature: 70±2˚C Voltage applied: 5.5Vdc Series protection resistance: 0Ω Test duration: 1000^{+48}_{0} hours	
		Equivalent series resistance	Twice or less times initial standard value		
		Current at 30 min.	Twice or less times initial standard value		
		Appearance	No obvious abnormality		
Voltage Holding Characteristics (Self Discharge)		Voltage between terminal leads higher than 4.2V		Charging Condition	Voltage applied: 5.0VDC (with case side terminal negative) Series resistance: 0Ω Charging time: 24 hours
				Storage	Time: 24 hours Temperature: Lower than 25˚C Humidity: Lower than 70%RH

FM Series for Automatic Assembly

The FM series includes small, resin-molded electric double-layer capacitors suitable for automatic assembly. These capacitors are ideal as long-time backup devices for minute-current loads in VCRs, audio systems, cordless telephones, and compact electronic systems. (FME types are backup devices adaptable to current consumption mA level.)

Features

- High adaptability to automatic assembly
- Can be cleaned
- Excellent voltage holding characteristics ideal for long-time supply of 1 μA to several hundred μA (Except 3.5 V type, FME type)
- Space saving

Applications

Backup of CMOS microcomputers, static RAMs, and DTSs

Part Number System

• Bulk

FM 0H 473 Z

- Z: Capacitance tolerance
  Z: +80%, –20%
- 473: Nominal capacitance
  First two digits represent significant figures.
  Third digit specifies number of zeros to follow μF code.
- 0H: Maximum operating voltage
  0H: 5.5 Vdc
  0V: 3.5 Vdc
- FM: Super Capacitor: FM series
  FME type
  FMR type

• Tape (Ammo Pack)

FM0H223Z TP 16

- 16: Height of component from tape center.
  16: 16 mm, 18: 18 mm
- TP: Tape packaging
- FM0H223Z: Part number of bulk packaging

NUMBER OF PACKED CAPACITORS

Tape: 1000 pcs./box

Markings

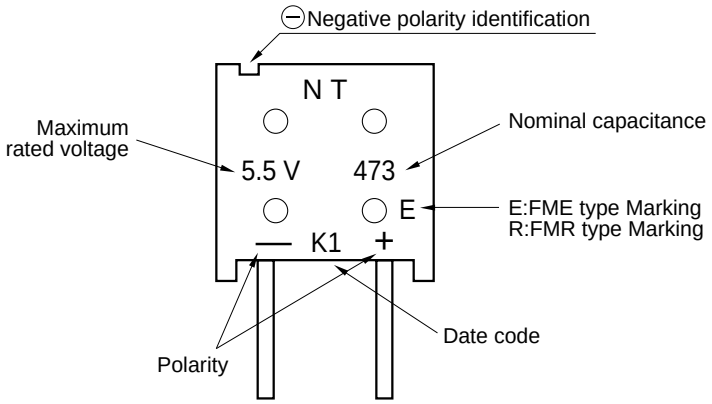

Dimensions And Standard Ratings

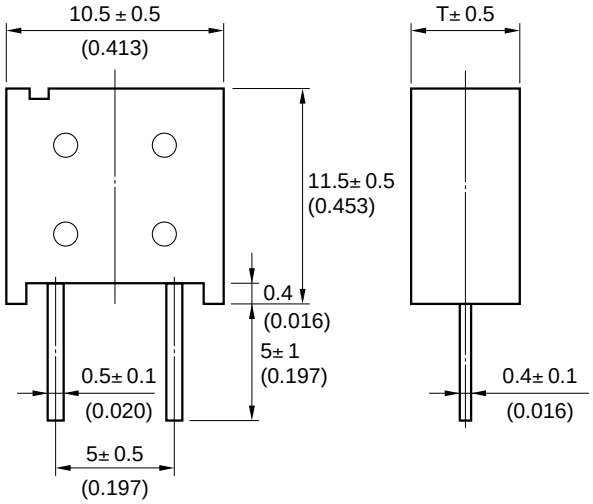

Unit: mm
(inch)

● 5.5 V Type

Part Number	Ammo pack	Max. Rated Voltage (VDC)	Nomial Capacitance Charge System (F)	Nomial Capacitance Discharge System (F)	Max. ESR (at 1 kHz) (Ω)	Max. Current at 30 minutes (mA)	Voltage Holding Characteristic min. (V)	T mm (inch)	Weight g (oz)
FM0H103Z	FM0H103ZTP ( )	5.5	0.01	0.014	300	0.015	4.2	5.0 (0.197)	1.3 (0.046)
FM0H223Z	FM0H223ZTP ( )	5.5	0.022	0.028	200	0.033	4.2	5.0 (0.197)	1.3 (0.046)
FM0H473Z	FM0H473ZTP ( )	5.5	0.047	0.06	200	0.071	4.2	5.0 (0.197)	1.3 (0.046)
FM0H104Z	FM0H104ZTP ( )	5.5	0.10	0.13	100	0.15	4.2	6.5 (0.256)	1.6 (0.056)
FM0H224Z	FM0H224ZTP ( )	5.5	–	0.22	100	0.33	4.2	6.5 (0.256)	1.6 (0.056)

Note: To complete part number, insert lead length H. (16 or 18 mm: Refer to Taping Specification on page 31.)

● 3.5 V Type

Part Number	Ammo pack	Max. Rated Voltage (VDC)	Nominal Capacitance Charge System (F)	Nominal Capacitance Discharge System (F)	Max. ESR (at 1 kHz) (Ω)	Max. Current at 30 minutes (mA)	T mm (inch)	Weight g (oz)
FM0V473Z	FM0V473ZTP ( )	3.5	0.047	0.06	200	0.042	5.0 (0.197)	1.3 (0.046)
FM0V104Z	FM0V104ZTP ( )	3.5	0.10	0.13	100	0.090	5.0 (0.197)	1.3 (0.046)
FM0V224Z	FM0V224ZTP ( )	3.5	0.22	0.30	100	0.20	6.5 (0.256)	1.6 (0.056)

Note: To complete part number, insert lead length H. (16 or 18 mm: Refer to Taping Specification on page 31.)

● FME Type (Backup Large Current , mA Order)

Part Number	Ammo pack	Max. Rated Voltage (VDC)	Nominal Capacitance Charge System (F)	Nominal Capacitance Discharge System (F)	Max. ESR (at 1 kHz) (Ω)	Max. Current at 30 minutes (mA)	T mm (inch)	Weight g (oz)
FME0H223Z	FME0H223ZTP ( )	5.5	0.022	0.028	40	0.033	5.0 (0.197)	1.3 (0.046)
FME0H473Z	FME0H473ZTP ( )	5.5	0.047	0.06	20	0.071	5.0 (0.197)	1.3 (0.046)

Note: To complete part number, insert lead length H. (16 or 18 mm: Refer to Taping Specification on page 31.)

● FMR Type (Extended Operating Temperature range)

Part Number	Ammo pack	Max. Rated Voltage (VDC)	Nominal Capacitance Charge System (F)	Nominal Capacitance Discharge System (F)	Max. ESR (at 1 kHz) (Ω)	Max. Current at 30 minutes (mA)	Voltage Holding Characteristic min.(V)	T mm (inch)	Weight g (oz)
FMR0H473Z	FMR0H473ZTP ( )	5.5	0.047	0.062	200	0.071	4.2	6.5	1.6

Note: To complete part number, insert lead length H. (16 or 18 mm: Refer to Taping Specification on page 31.)

● FM 6.5V Type

Part Number	Ammo pack	Max. Rated Voltage (VDC)	Nominal Capacitance Charge System (F)	Nominal Capacitance Discharge System (F)	Max. ESR (at 1 kHz) (Ω)	Max. Current at 30 minutes (mA)	T mm (inch)	Weight g (oz)
FM0J473Z	FM0J473ZTP ( )	6.5	0.047	0.062	200	0.071	6.5	1.6

Note: To complete part number, insert lead length H. (16 or 18 mm: Refer to Taping Specification on page 31.)

Specifications 5.5 V Type

Item		Standard		Test Conditions Conforming to JIS C 5102-1994
Operating Temperature Range		–25°C to +70°C		
Maximum Operating Voltage		5.5 VDC		
Nominal Capacitance Range		See standard list		
Capacitance Allowance		+80%, –20%		See characteristics measuring method.
Equivalent Series Resistance		See standard list		See characteristics measuring method.
Current (30-minutes value)		See standard list		See characteristics measuring method.
Surge Voltage		Capacitance	More than 90% of initial requirement	Conforms to 7.14 Surge Voltage: 6.3 V Temperature: 70 ± 2°C Charge: 30 sec. Discharge: 9 min. 30 sec. Number of cycles 1000 cycles. Series resistance: 0.01F: 1500 Ω 0.22F: 56 Ω 0.022 F: 560 Ω 0.047 F: 300 Ω 0.10 F: 150 Ω Discharge resistance: 0 Ω
		Equivalent series resistance	Not to exceed 120% of initial requirement	
		Current (30-minute value)	Not to exceed 120% of initial requirement	
		Appearance	No obvious abnormality.	
Temperature Variation of Characteristics	Phase 2	Capacitance	50% or higher of initial value	Conforms to 7.12 Phase 1: +25 ± 2°C Phase 2: –25 ± 2°C Phase 3: –40 ± 2°C Phase 4: +25 ± 2°C Phase 5: +70 ± 2°C Phase 6: +25 ± 2°C
		Equivalent series resistance	4 or less times initial value	
	Phase 5	Capacitance	200% or below of initial value	
		Equivalent series resistance	Satisty initial standard value	
		Current (30-minute value)	1.5 CV (mA) or below	
	Phase 6	Capacitance	Within ±20% of initial value	
		Equivalent series resistance	Satisty initial standard value	
		Current (30-minute value)	Satisty initial standard value	
Lead Strengh (Tensile)		No loosening nor permanent damage of the leads		Conforms to 8.1.2 (1) 1 kg 10sec.
Vibration Resistance		Capacitance	Satisty initial standard value	Conforms to 8.2.3 Frequency : 10 to 55 Hz Test duration : 6 hours
		Equivalent series resistance		
		Current (30-minute value)		
		Appearance	No obvious abnormality	
Solderability		3/4 or more of the pin surface should be covered with new solder		Conforms to 8.4 Solder temperature: 230 ± 5°C Dipping duration: 5 ± 0.5 sec. Dipped up to 1.6 mm from the lower end of the capacitor.
Soldering Heat Resistance		Capacitance	Satisty initial standard value	Conforms to 8.5 Solder temperature: 260 ± 10°C Dipping duration: 10 ± 1 sec. Dipped up to 1.6 mm from the lower end of the capacitor.
		Equivalent series resistance		
		Current (30-minute value)		
		Appearance	No obvious able abnormality	
Temperature Cycle		Capacitance	Satisty initial standard value	Conforms to 9.3 Temperature condition: –25°C → normal temperature → +70°C → normal temperature Number of cycles: 5 cycles
		Equivalent series resistance		
		Current (30-minute value)		
		Appearance	No obvious abnormality	
Humidity Resistance		Capacitance	Within 20% of initial value	Conforms to 9.5 Temperature: 40 ± 2°C Relative humidity: 90 to 95% RH Test duration: 240 ± 8 hours
		Equivalent series resistance	1.2 or less times initial standard value	
		Current (30-minute value)	1.2 or less times initial standard value	
		Appearance	No obuious abnormality	
High Temperature Load		Capacitance	Within 30% of initial value	Conforms to 9.10 Temperature: 70 ± 2°C Voltage applied: 5.5 Vdc Series protection resistance: 0 Ω Test duration: 1000^{+48}_{0} hours
		Equivalent series resistance	Twice or less times initial standard value	
		Current (30-minute value)	Twice or less times initial standard value	
		Appearance	No obvious abnormality	
Voltage Holding Characteristics (Self Discharge)		Voltage between terminal leads higher than 4.2 V		Charging condition: Voltage applied: 5.0 VDC Series resistance: 0 Ω Charging time: 24hours
				Storage: Time: 24hours Temperature:Lower than 25°C Humidity:Lower than 70%RH

Specifications 3.5 V Type

Item		Standard		Test Conditions Conforming to JIS C 5102-1994
Operating Temperature Range		–25°C to +70˚C		
Maximum Operating Voltage		3.5 VDC		
Nominal Capacitance Range		See standard list		
Capacitance Allowance		+80%, –20%		See characteristics measuring method.
Equivalent Series Resistance		See standard list		See characteristics measuring method.
Current (30-minutes value)		See standard list		See characteristics measuring method.
Surge Voltage		Capacitance	More than 90% of initial requirement	Conforms to 7.14 Surge voltage: 4.0 V Temperature: 70 ± 2°C Charge: 30 sec. Discharge: 9 min. 30 sec. Number of cycles 1000 cycles. Series resistance: 0.047 F: 300 Ω 0.10 F: 150 Ω 0.22 F: 56 Ω Discharge resistance: 0 Ω
		Equivalent series resistance	Not to exceed 120% of initial requirement	
		Current (30-minute value)	Not to exceed 120% of initial requirement	
		Appearance	No obvious abnormality	
Temperature Variation of Characteristics	Phase 2	Capacitance	50% or higher of initial value	Conforms to 7.12 Phase 1: +25 ± 2°C Phase 2: –25 ± 2°C Phase 3: –40 ± 2°C Phase 4: +25 ± 2°C Phase 5: +70 ± 2°C Phase 6: +25 ± 2°C
		Equivalent series resistance	4 or less times initial value	
	Phase 5	Capacitance	200% or below of initial value	
		Equivalent series resistance	Satisty initial standard value	
		Current (30-minute value)	1.5 CV (mA) or below	
	Phase 6	Capacitance	Within ±20% of initial value	
		Equivalent series resistance	Satisty initial standard value	
		Current (30-minute value)	Satisty initial standard value	
Lead Strengh (Tensile)		No loosening nor permanent damage of the leads		Conforms to 8.1.2 (1) 1 kg 10 sec
Vibration Resistance		Capacitance	Satisty initial standard value	Conforms to 8.2.3 Frequency: 10 to 55 Hz Test duration: 6 hours
		Equivalent series resistance		
		Current (30-minute value)		
		Appearance	No considerable abnormality	
Solderability		3/4 or more of the pin surface should be covered with new solder		Conforms to 8.4 Solder temperature: 230 ± 5°C Dipping duration: 5 ± 0.5 sec. Dipped up to 1.6 mm from for the lower end of the capacitor.
Soldering Heat Resistance		Capacitance	Satisty initial standard value	Conforms to 8.5 Solder temperature: 260 ± 10°C Dipping duration: 10 ± 1 sec. Dipped up to 1.6 mm from for the lower end of the capacitor.
		Equivalent series resistance		
		Current (30-minute value)		
		Appearance	No obvious abnormality	
Temperature Cycle		Capacitance	Satisty initial standard value	Conforms to 9.3 Temperature condition: –25°C → normal temperature → +70°C → normal temperature Number of cycles: 5 cycles
		Equivalent series resistance		
		Current (30-minute value)		
		Appearance	No obvious abnormality	
Humidity Resistance		Capacitance	Within ±20% of initial value	Conforms to 9.5 Temperature: 40 ± 2°C Relative humidity: 90 to 95% RH Test duration: 240 ± 8 hours
		Equivalent series resistance	1.2 or less times initial standard value	
		Current (30-minute value)	1.2 or less times initial standard value	
		Appearance	No obvious abnormality	
High Temperature Load		Capacitance	Within 30% of initial value	Conforms to 9.10 Temperature: 70 ± 2°C Voltage applied: 3.5 Vdc Series protection resistance: 0 Ω Test duration: 1000^{+48}_{0} hours
		Equivalent series resistance	Twice or less times initial standard value	
		Current (30-minute value)	Twice or less times initial standard value	
		Appearance	No obvious abnormality	

Specifications FME Type

Item		Standard		Test Conditions Conforming JIS C 5102-1994
Operating Temperature Range		–25°C to +70˚C		
Maximum Operating Voltage		5.5 VDC		
Nominal Capacitance Range		See standard list		
Capacitance Allowance		+80%, –20%		See characteristics measuring method.
Equivalent Series Resistance		See standard list		See characteristics measuring method.
Current (30-minutes value)		See standard list		See characteristics measuring method.
Surge Voltage		Capacitance	More than 90% of initial requirement	Conforms to 7.14 Surge Voltage: 7.4 V Temperature: 70 ± 2°C Chargs: 30 sec. Dischargs: 9 min. 30 sec. Number of cycles 1000 cycles. Series resistance: 0.022 F: 560 Ω 0.047 F: 300 Ω Discharge resistance: 0 Ω
		Equivalent series resistance	Not to exceed 120% of initial requirement	
		Current (30-minute value)	Not to exceed 120% of initial requirement	
		Appearance	No obvious abnormality	
Temperature Variation of Characteristics	Phase 2	Capacitance	50% or higher of initial value	Conforms to 7.12 Phase 1: +25 ± 2°C Phase 2: –25 ± 2°C Phase 3: –40 ± 2°C Phase 4: +25 ± 2°C Phase 5: +70 ± 2°C Phase 6: +25 ± 2°C
		Equivalent series resistance	3 or less times initial value	
	Phase 5	Capacitance	150% or below of initial value	
		Equivalent series resistance	Satisty initial standard value	
		Current (30-minute value)	1.5 CV (mA) or below	
	Phase 6	Capacitance	Within ±20% of initial value	
		Equivalent series resistance	Satisty initial standard value	
		Current (30-minute value)	Satisty initial standard value	
Lead Strengh (Tensile)		No loosening nor permanent damage of the leads		Conforms to 8.1.2 (1) 1 kg 10 sec
Vibration Resistance		Capacitance	Should satisty initial standard value	Conforms to 8.2.3 Frequency: 10 to 55 Hz Test duration: 6 hours
		Equivalent series resistance		
		Current (30-minute value)		
		Appearance	There should be no considerable abnormality	
Solderability		3/4 or more of the pin surface should be covered with new solder		Conforms to 8.4 Solder temperature: 230 ± 5°C Dipping duration: 5 ± 0.5 sec. Dipped up to 1.6 mm from the lower end of the capacitor.
Soldering Heat Resistance		Capacitance	Satisty initial standard value	Conforms to 8.5 Solder temperature: 260 ± 10°C Dipping duration: 10 ± 1 sec. Dipped up to 1.6 mm from the lower end of the capacitor.
		Equivalent series resistance		
		Current (30-minute value)		
		Appearance	No obvious abnormality	
Temperature Cycle		Capacitance	Satisty initial standard value	Conforms to 9.3 Temperature condition: –25°C → normal temperature → +70°C → normal temperature Number of cycles: 5 cycles
		Equivalent series resistance		
		Current (30-minute value)		
		Appearance	No obvious abnormality	
Humidity Resistance		Capacitance	Within ±20% of initial value	Conforms to 9.5 Temperature: 40 ± 2°C Relative humidity: 90 to 95% RH Test duration: 240 ± 8 hours
		Equivalent series resistance	1.2 or less times initial standard value	
		Current (30-minute value)	1.2 or less times initial standard value	
		Appearance	No obvious abnormality	
High Temperature Load		Capacitance	Within 30% of initial value	Conforms to 9.10 Temperature: 70 ± 2°C Voltage applied: 5.5 Vdc Series protection resistance: 0 Ω Test duration: 1000^{+48}_{0} hours
		Equivalent series resistance	Twice or less times initial standard value	
		Current (30-minute value)	Twice or less times initial standard value	
		Appearance	No obvious abnormality	

Specifications FMR Type

Item		Standard		Test Conditions Conforming to JIS C 5102-1994
Operating Temperature Range		–40°C to +85°C		
Maximum Operating Voltage		5.5 VDC		
Nominal Capacitance Range		See standard list		
Capacitance Allowance		+80%, –20%		See characteristics measuring method.
Equivalent Series Resistance		See standard list		See characteristics measuring method.
Current (30-minutes value)		See standard list		See characteristics measuring method.
Surge Voltage		Capacitance	More than 90% of initial requirement	Conforms to 7.14 Surge Voltage: 6.3 V Temperature: 85 ± 2°C Charge: 30 sec. Discharge: 9 min. 30 sec. Number of cycles 1000 cycles. Series resistance: 0.047 F: 300 Ω Discharge resistance: 0 Ω
		Equivalent series resistance	Not to exceed 120% of initial requirement	
		Current (30-minute value)	Not to exceed 120% of initial requirement	
		Appearance	No obvious abnormality	
Temperature Variation of Characteristics	Phase 2	Capacitance	50% or higher initial value	Conforms to 7.12 Phase 1: +25 ± 2°C Phase 2: –25 ± 2°C Phase 3: –40 ± 2°C Phase 4: +25 ± 2°C Phase 5: +85 ± 2°C Phase 6: +25 ± 2°C
		Equivalent series resistance	4 or less times initial value	
	Phase 3	Capacitance	30% or higher initial value	
		Equivalent series resistance	7 or less times initial value	
	Phase 5	Capacitance	200% or higher initial value	
		Equivalent series resistance	Satisfy initial standard value	
		Current (30-minute value)	1.5 CV (mA) or below	
	Phase 6	Capacitance	Within ±20% of initial standard value	
		Equivalent series resistance	Satisfy initial standard value	
		Current (30-minute value)	Satisfy initial standard value	
Lead Strengh (Tensile)		No loosening nor permanent damage of the leads		Conforms to 8.1.2 (1) 1 kg 10sec.
Vibration Resistance		Capacitance	Satisty initial standard value	Conforms to 8.2.3 Frequency : 10 to 55 Hz Test duration : 6 hours
		Equivalent series resistance		
		Current (30-minute value)		
		Appearance	No obvious abnormality	
Solderability		3/4 or more of the pin surface should be covered with new solder.		Conforms to 8.4 Solder temperature: 230 ± 5°C Dipping duration: 5 ± 0.5 sec. Dipped up to 1.6 mm from the lower end of the capacitor.
*Soldering Heat Resistance ①		Capacitance	Satisty initial standard value	Conforms to 8.5 Solder temperature: 260 ± 10°C Dipping duration: 10 ± 1 sec. Dipped up to 1.6 mm from the lower end of the capacitor.
		Equivalent series resistance		
		Current (30-minute value)		
		Appearance	No obvious able abnormality	
*Soldering Heat Resistance ②		Capacitance	Satisty initial standard value	After reflow pre-heating (160°C ± 5°C 120 ±10 sec.)
		Equivalent series resistance		
		Current (30-minute value)		
		Appearance	No obvious able abnormality	
*Temperature Cycle		Capacitance	Satisty initial standard value	Conforms to 9.3 Temperature condition: –40°C → normal temperature → +85°C → normal temperature Number of cycles: 5 cycles
		Equivalent series resistance		
		Current (30-minute value)		
		Appearance	No obvious abnormality	
* Humidity Resistance		Capacitance	Within 20% of initial value	Conforms to 9.5 Temperature: 40 ± 2°C Relative humidity: 90 to 95% RH Test duration: 240 ± 8 hours
		Equivalent series resistance	1.2 or less times initial standard value	
		Current (30-minute value)	1.2 or less times initial standard value	
		Appearance	No obuious abnormality	
* High Temperature Load		Capacitance	Within 30% of initial value	Conforms to 9.10 Temperature: 85 ± 2°C Voltage applied: 5.5 Vdc Series protection resistance: 0 Ω Test duration: 1000 $^{+48}_{0}$ hours
		Equivalent series resistance	Twice or less times initial standard value	
		Current (30-minute value)	Twice or less times initial standard value	
		Appearance	No obvious abnormality	
Voltage Holding Characteristics (Self Discharge)		Voltage between terminal leads higher than 4.2 V		Charging condition: Voltage applied: 5.0 VDC Series resistance: 0 Ω Charging time: 24hours Storage: Time: 24hours Temperature:Lower than 25°C Humidity:Lower than 70%RH

*Performance items indicated with * are guaranteed for items after reflow pre-heating.

Specifications FM 6.5V Type

Item		Standard		Test Conditions Conforming to JIS C 5102-1994
Operating Temperature Range		–25°C to +70˚C		
Maximum Operating Voltage		6.5 VDC		
Nominal Capacitance Range		See standard list		
Capacitance Allowance		+80%, –20%		See characteristics measuring method.
Equivalent Series Resistance		See standard list		See characteristics measuring method.
Current (30-minutes value)		See standard list		See characteristics measuring method.
Surge Voltage		Capacitance	More than 90% of initial requirement	Conforms to 7.14 Surge Voltage: 7.4 V Temperature: 70 ± 2˚C Charge: 30 sec. Discharge: 9 min. 30 sec. Number of cycles 1000 cycles. Series resistance: 0.047 F: 300 Ω Discharge resistance: 0 Ω
		Equivalent series resistance	Not to exceed 120% of initial requirement	
		Current (30-minute value)	Not to exceed 120% of initial requirement	
		Appearance	No obvious abnormality	
Temperature Variation of Characteristics	Phase 2	Capacitance	50% or higher of initial value	Conforms to 7.12 Phase 1: +25 ± 2°C Phase 2: –25 ± 2°C Phase 3: –40 ± 2°C Phase 4: +25 ± 2°C Phase 5: +70 ± 2°C Phase 6: +25 ± 2°C
		Equivalent series resistance	4 or less times initial value	
	Phase 5	Capacitance	200% or below of initial value	
		Equivalent series resistance	Satisty initial standard value	
		Current (30-minute value)	1.5 CV (mA) or below	
	Phase 6	Capacitance	Within ±20% of initial value	
		Equivalent series resistance	Satisty initial standard value	
		Current (30-minute value)	Satisty initial standard value	
Lead Strengh (Tensile)		No loosening nor permanent damage of the leads		Conforms to 8.1.2 (1) 1 kg 10sec.
Vibration Resistance		Capacitance	Satisty initial standard value	Conforms to 8.2.3 Frequency : 10 to 55 Hz Test duration : 6 hours
		Equivalent series resistance		
		Current (30-minute value)		
		Appearance	No obvious abnormality	
Solderability		3/4 or more of the pin surface should be covered with new solder		Conforms to 8.4 Solder temperature: 230 ± 5°C Dipping duration: 5 ± 0.5 sec. Dipped up to 1.6 mm from the lower end of the capacitor.
Soldering Heat Resistance		Capacitance	Satisty initial standard value	Conforms to 8.5 Solder temperature: 260 ± 10°C Dipping duration: 10 ± 1 sec. Dipped up to 1.6 mm from the lower end of the capacitor.
		Equivalent series resistance		
		Current (30-minute value)		
		Appearance	No obvious able abnormality	
Temperature Cycle		Capacitance	Satisty initial standard value	Conforms to 9.3 Temperature condition: –25°C → normal temperature → +70°C → normal temperature Number of cycles: 5 cycles
		Equivalent series resistance		
		Current (30-minute value)		
		Appearance	No obvious abnormality	
Humidity Resistance		Capacitance	Within 20% of initial value	Conforms to 9.5 Temperature: 40 ± 2°C Relative humidity: 90 to 95% RH Test duration: 240 ± 8 hours
		Equivalent series resistance	1.2 or less times initial standard value	
		Current (30-minute value)	1.2 or less times initial standard value	
		Appearance	No obuious abnormality	
High Temperature Load		Capacitance	Within 30% of initial value	Conforms to 9.10 Temperature: 70 ± 2°C Voltage applied: 6.5 Vdc Series protection resistance: 0 Ω Test duration: 1000^{+48}_{0} hours
		Equivalent series resistance	Twice or less times initial standard value	
		Current (30-minute value)	Twice or less times initial standard value	

● **FMC Type**

Markings

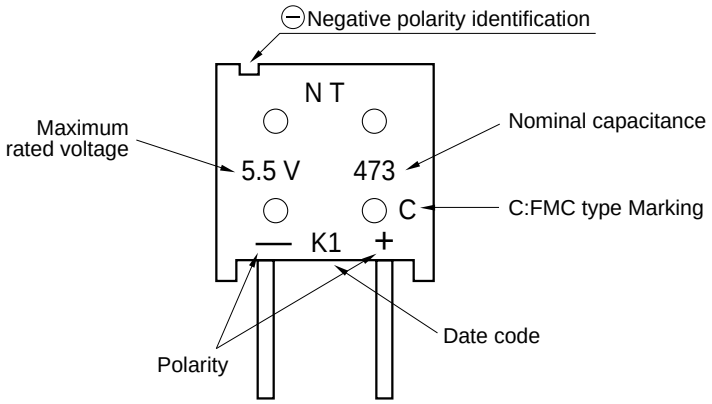

Dimensions And Standard Ratings

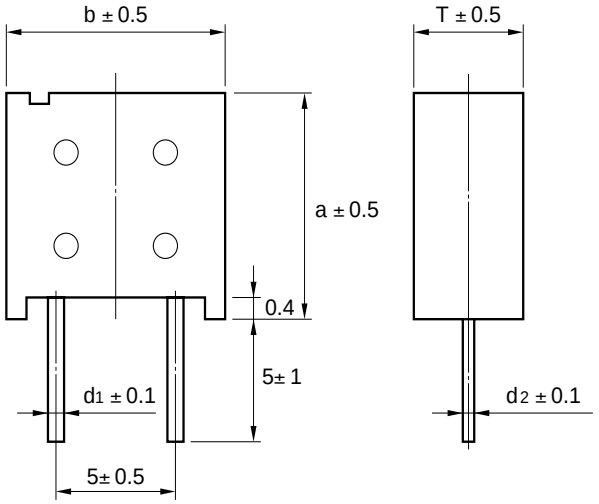

Unit: mm

Part Number	Ammo pack	Max. Rated Voltage (VDC)	Nomial Capacitance Charge System (F)	Discharge System (F)	Max. ESR (at 1 kHz) (Ω)	Max. Current at 30 minutes (mA)	Voltage Holding Characteristic min. (V)	a (mm)	b (mm)	T (mm)	d_1 (mm)	d_2 (mm)	Weight (g)
FMC0H473Z	FMC0H473ZTP( )	5.5	0.047	0.062	less than 100	less than 0.071	more than 4.2V	11.5	10.5	5.0	0.5	0.4	1.3
FMC0H104Z	FMC0H104ZTP( )	5.5	0.10	0.13	less than 50	less than 0.15	more than 4.2V	11.5	10.5	6.5	0.5	0.4	1.6
FMC0H334Z	FMC0H334ZTP( )	5.5	–	0.33	less than 30	less than 0.50	more than 4.2V	15.0	14.0	9.0	0.6	0.6	3.5

Chip parts applicable to treatment in bond hardening furnace (160 ± 5°C for 120 ±10 seconds)

Specifications FMC Type

Item		Standard		Test Conditions Conforming to JIS C 5102-1994
Operating Temperature Range		–25°C to +70˚C		
Maximum Operating Voltage		5.5 VDC		
Nominal Capacitance Range		0.047F , 0.10F , 0.33F		
Capacitance Allowance		+80%, –20%		See characteristics measuring method.
Equivalent Series Resistance		See standard list		See characteristics measuring method.
Current (30-minutes value)		See standard list		See characteristics measuring method.
Surge Voltage		Capacitance	More than 90% of initial requirement	Conforms to 7.14 Surge Voltage: 6.3 V Temperature: 70 ± 2°C Chargs: 30 sec. Dischargs: 9 min. 30 sec. Number of cycles 1000 cycles. Series resistance: 0.1 F: 150 Ω 0.33 F: 51 Ω 0.047 F: 300 Ω Discharge resistance: 0 Ω
		Equivalent series resistance	Not to exceed 120% of initial requirement	
		Current (30-minute value)	Not to exceed 120% of initial requirement	
		Appearance	No obvious abnormality.	
Temperature Variation of Characteristics	Phase 2	Capacitance	50% or higher of initial value	Conforms to 7.12 Phase 1: +25 ± 2°C Phase 2: –25 ± 2°C Phase 3: –40 ± 2°C Phase 4: +25 ± 2°C Phase 5: +70 ± 2°C Phase 6: +25 ± 2°C
		Equivalent series resistance	3 or less times initial value	
	Phase 5	Capacitance	150% or below of initial value	
		Equivalent series resistance	Satisty initial standard value	
		Current (30-minute value)	1.5 CV (mA) or below	
	Phase 6	Capacitance	Within ±20% of initial value	
		Equivalent series resistance	Satisty initial standard value	
		Current (30-minute value)	Satisty initial standard value	
Lead Strengh (Tenile)		No loosening nor permanent damage of the leads		Conforms to 8.1.2 (1) 1 kg 10 sec
Vibration Resistance		Capacitance	Should satisty initial standard value	Conforms to 8.2.3 Frequency: 10 to 55 Hz Test duration: 6 hours
		Equivalent series resistance		
		Current (30-minute value)		
		Appearance	There should be no considerable abnormality	
Solderability		3/4 or more of the pin surface should be covered with new solder		Conforms to 8.4 Solder temperature: 230 ± 5°C Dipping duration: 5 ± 0.5 sec. Dipped up to 1.6 mm from the lower end of the capacitor.
Soldering Heat Resistance		Capacitance	Satisty initial standard value	Conforms to 8.5 Solder temperature: 260 ± 10°C Dipping duration: 10 ± 1 sec. Dipped up to 1.6 mm from the lower end of the capacitor.
		Equivalent series resistance		
		Current (30-minute value)		
		Appearance	No obvious abnormality	
Temperature Cycle		Capacitance	Satisty initial standard value	Conforms to 9.3 Temperature condition: –25°C → normal temperature → +70°C → normal temperature Number of cycles: 5 cycles
		Equivalent series resistance		
		Current (30-minute value)		
		Appearance	No obvious abnormality	
Humidity Resistance		Capacitance	Within ±20% of initial value	Conforms to 9.5 Temperature: 40 ± 2°C Relative humidity: 90 to 95% RH Test duration: 240 ± 8 hours
		Equivalent series resistance	1.2 or less times initial standard value	
		Current (30-minute value)	1.2 or less times initial standard value	
		Appearance	No obvious abnormality	
High Temperature Load		Capacitance	Within 30% of initial value	Conforms to 9.10 Temperature: 70 ± 2°C Voltage applied: 5.5 Vdc Series protection resistance: 0 Ω Test duration: 1000^{+48}_{0} hours
		Equivalent series resistance	Twice or less times initial standard value	
		Current (30-minute value)	Twice or less times initial standard value	
		Appearance	No obvious abnormality	
*Voltage Holding Characteristics (Self Dischage)		Voltage between terminal leads higher then 4.2V		Charging condition: Voltage applied: 5.0 VDC Series resistance: 0 Ω Charging time: 24hours Storage: Time: 24hours Temperature:Lower than 25°C Humidity:Lower than 70%RH

*The characteristics above must be satisfied for asterisked items after the end of reflow soldering (according to the reflow condition shown on page).

Taping Specification (Ammo pack) (except FMC0H334ZTP( ))

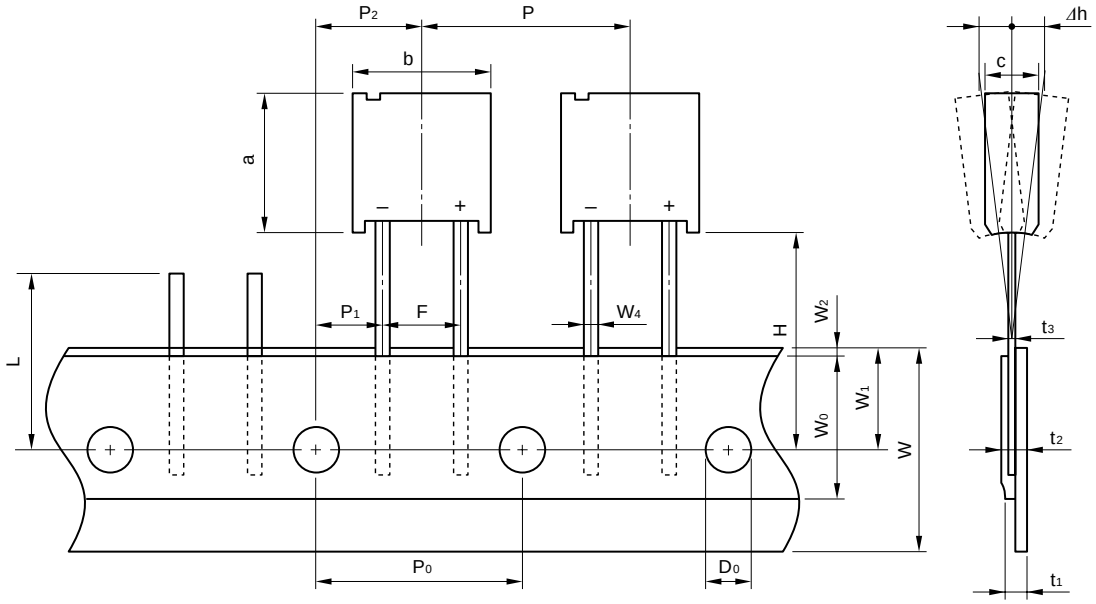

Unit : mm

Item	Symbol	Value	Tolerance	Remarks
Component Height	a	11.5	±0.5	
Component Width	b	1 0.5	±0.5	
Component Thickness	C	–	±0.5	5.5 V Type: 5.0/0.010 F~0.047 F, 6.5/0.10 F~0.22 F 3.5 V Type: 5.0/0.047 F~0.10 F, 6.5/0.22 F FME Type: 5.0/0.022 F~0.047 F 6.5 Type: 6.5/0.022 F FMR Type: 6.5/0.047 F FMC Type: 5.0/0.047 F, 6.5/0.10 F
Lead-wire Width	W_4	0.5	±0.1	
Lead-wire Thickness t_3	t_3	0.4	±0.1	
Pitch of Component	P	12.7	±1.0	
Sprocket Pitch	P_0	12.7	±0.3	
Sprocket Hole Center to Lead	P_1	3.85	±0.7	
Sprocket Hole to Component Center	P_2	6.35	±1.3	
Lead Spacing	F	5.0	±0.5	
Component Alignment	Δh	2.0 max.	–	Including tiltiing caused by bending of lead wire
Tape Width	W	18.0	$^{+1.0}_{-0.5}$	
Hold-down tape Width	W_0	12.5 min.	–	
Sprocket Hole Position	W_1	9.0	±0.5	
Hold-down Tape Position	W_2	3.0 max.	–	No protrusion of tape
Height of Component from Tape Center	H	16.0	±0.5	
		18.0	±0.5	
Sprocket Hole Diameter	D_0	ϕ4.0	±0.2	
Total Tape Thickness	t_1	0.7	±0.2	
	t_2	1.5 max.	–	
Length of Shipped Lead	L	11.0 max.	–	

Packing Quantity

1000 pcs. / box

Taping Specifications [FMC0H334ZTP( )]

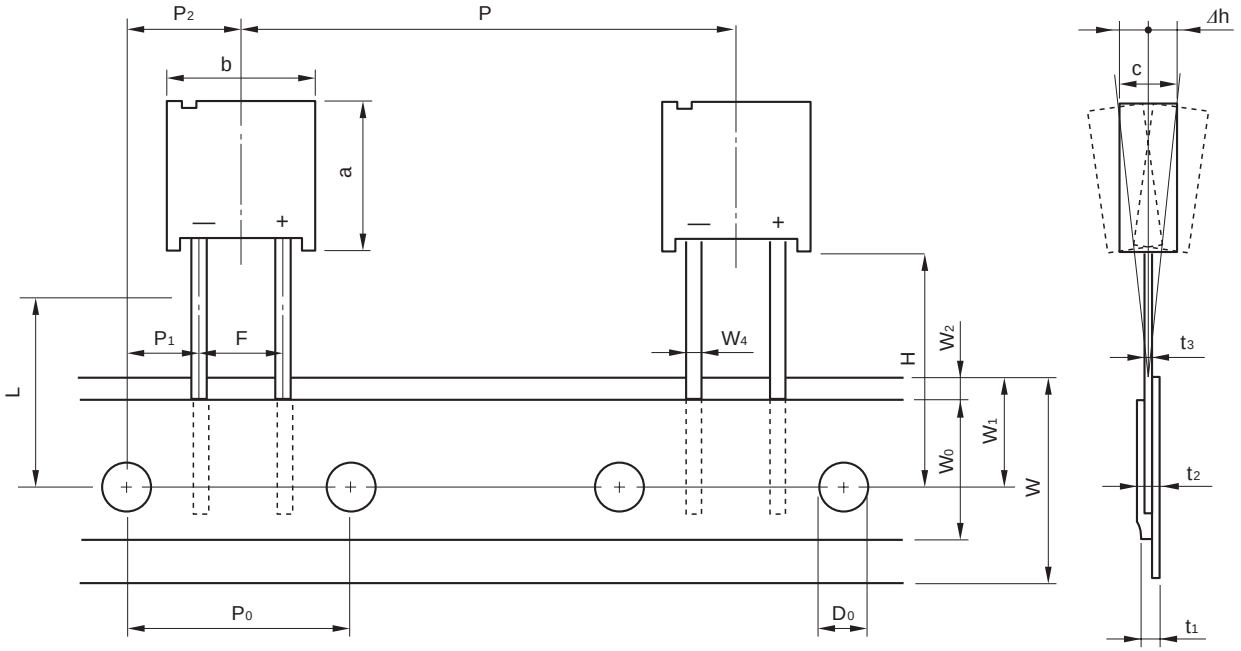

Unit : mm

Item	Symbol	Value	Tolerance	Remarks
Component Height	a	15.0	±0.5	
Component Width	b	14.0	±0.5	
Component Thickness	c	9.0	±0.5	
Lead-wire Width	W_4	0.6	±0.1	
Lead-wire Thickness	t_3	0.6	±0.1	
Pitch of Component	P	25.4	±1.0	
Sprocket Pitch	P_0	12.7	±0.3	
Sprocket Hole Center to Lead	P_1	3.85	±0.7	
Sprocket Hole to Component Center	P_2	6.35	±1.3	
Lead Spacing	F	5.0	±0.5	
Component Alignment	Δ h	2.0 max.	–	Including tiltiing caused by bending of lead wire
Tape Width	W	18.0	$^{+1.0}_{-0.5}$	
Hold-down tape Width	W_0	12.5 min.	–	
Sprocket Hole Position	W_1	9.0	±0.5	
Hold-down Tape Position	W_2	3.0 max.	–	No protrusion of tape
Height of Component from Tape Center	H	16.0	±0.5	
		18.0	±0.5	
Sprocket Hole Diameter	D_0	ϕ4.0	±0.2	
Total tape thickness	t_1	0.67	±0.2	
	t_2	1.7 max.	–	
Length of Shipped Lead	L	11.0 max.	–	

Packing dimensions

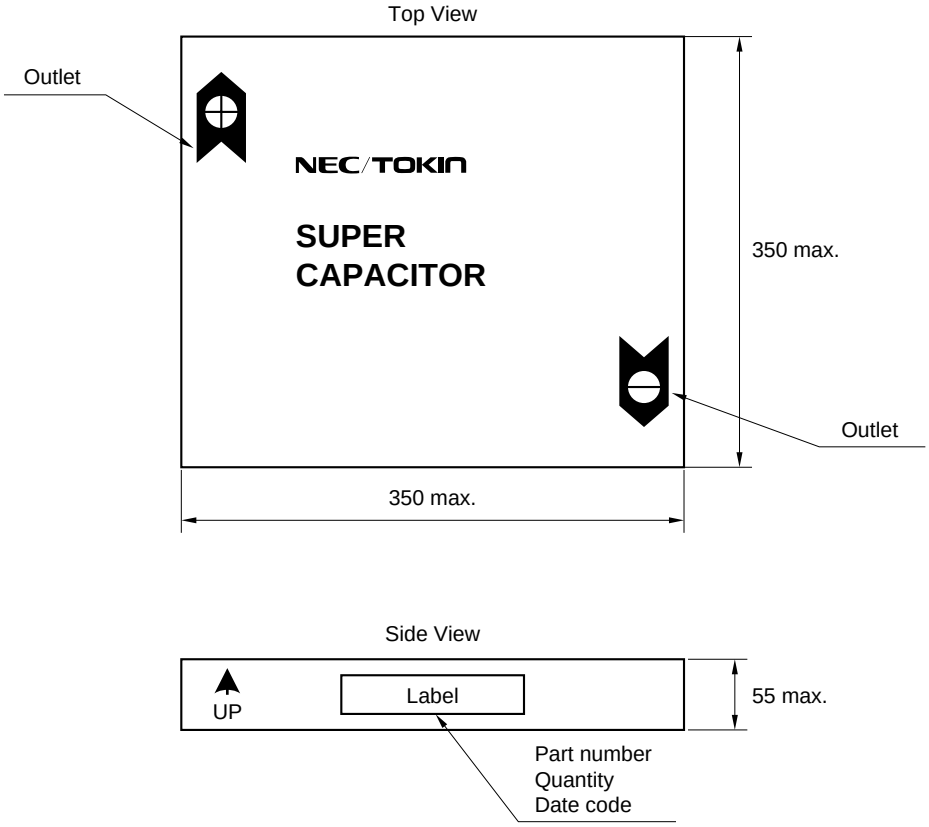

Marking of Box

Marking shows the following items.

(a) Terminal direction
(b) Part number
(c) Quantity
(d) Date code
(e) Company logo

Packing Quantity :

1000 pcs. / box (Except FMC0H334ZTP( ))
400 pcs. / box (FMC0H334ZTP( ))

FA Series for Large Backup Current Capacitors

The FA series is suitable for supplying a large current in a short time.
These capacitors are ideal for momentarily backing up a high-current, short-time load in an electronic system (in the event of momentary power failure).

Features

- Extremely low equivalent series resistance (ESR) ideal for supplying backup current of 10 mA to 1 A for a short time
- High breakdown voltage (maximum operating voltage: 11 V) that can drive microcomputers and actuators

Applications

Momentary backup of microcomputers and DRAMs and auxiliary power supply of mechanical systems (motors, relays, electromagnetic valves)

Part Number System

FA 0H 473 Z

- Z: Capacitance tolerance: +80%, –20%
- 473: Capacitance: 0.047 F
  First two digits represent significant figures.
  Third digit specifies number of zeros to follow microfarad code.
- 0H: Maximum rated voltage: 0 H: 5.5 V (Marking: 5 V)
  1 A: 11 V (Marking: 10 V)
- FA: Super Capacitor: FA series

Markings

Markings are made with black ink on the green sleeve.

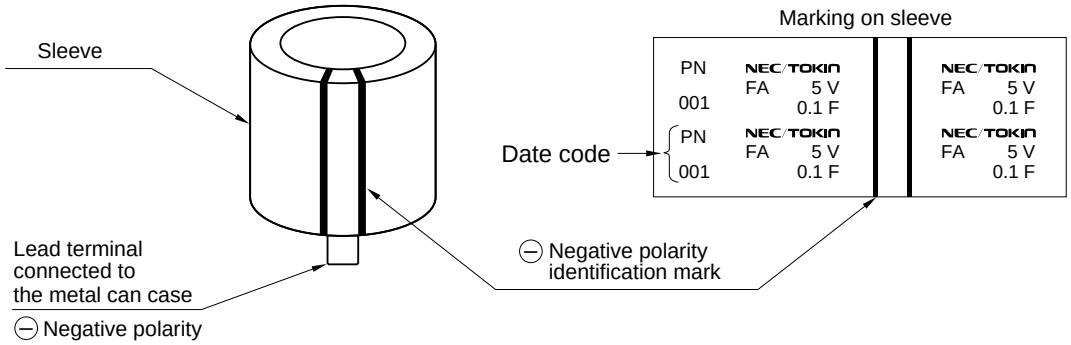

Dimensions and Standard Ratings

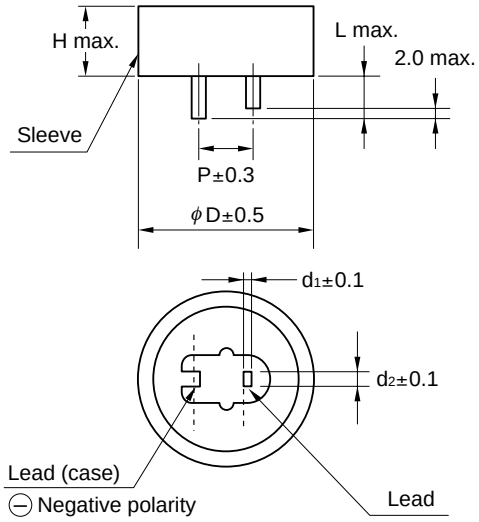

Part No.	Dimensions mm (inch)						Weight
	D	H	P	d_1	d_2	L	g (oz)
FA0H473Z	16.0 (0.630)	15.5 (0.610)	5.1 (0.2)	0.4 (0.016)	1.2 (0.047)	5.0 (0.197)	6.2 (0.219)
FA0H104Z	21.5 (0.846)	15.5 (0.610)	7.6 (0.3)	0.6 (0.024)	1.2 (0.047)	5.5 (0.217)	12 (0.423)
FA0H224Z	28.5 (1.122)	16.5 (0.650)	10.2 (0.4)	0.6 (0.024)	1.4 (0.055)	9.5 (0.374)	25 (0.882)
FA0H474Z	36.5 (1.437)	16.5 (0.650)	15 (0.591)	0.6 (0.024)	1.7 (0.067)	9.5 (0.374)	42 (1.482)
FA0H105Z	44.5 (1.752)	18.5 (0.728)	20 (0.787)	1.0 (0.039)	1.4 (0.055)	9.5 (0.374)	65 (2.293)
FA1A223Z	16.0 (0.630)	25.0 (0.984)	5.1 (0.2)	0.4 (0.016)	1.2 (0.047)	5.0 (0.197)	7.5 (0.265)
FA1A104Z	28.5 (1.122)	25.5 (1.004)	10.2 (0.4)	0.6 (0.024)	1.4 (0.055)	9.5 (0.374)	32 (1.129)
FA1A224Z	36.5 (1.437)	27.5 (1.083)	15 (0.591)	1.0 (0.039)	1.4 (0.055)	9.5 (0.374)	55 (1.940)
FA1A474Z	44.5 (1.752)	28.5 (1.122)	20 (0.787)	1.0 (0.039)	1.4 (0.055)	9.5 (0.374)	83 (2.928)

Note: Weight values are typical.

Part Number	Max. Rated Voltage (VDC)	Nominal Capacitance		Max. Current at 30 minutes (mA)	Max. ESR (at 1 kHz) (Ω)
		Charge System (F)	Discharge System (F)		
FA0H473Z	5.5	0.047	0.075	0.071	20
FA0H104Z	5.5	0.1	0.16	0.15	8
FA0H224Z	5.5	0.22	0.35	0.33	5
FA0H474Z	5.5	0.47	0.75	0.71	3.5
FA0H105Z	5.5	1.0	1.6	1.5	2.5
FA1A223Z	11	0.022	0.035	0.066	20
FA1A104Z	11	0.1	0.16	0.33	8
FA1A224Z	11	0.22	0.35	0.66	6
FA1A474Z	11	0.47	0.75	1.41	4

Specifications

Item		Specification		Test Conditions Conforming to JIS C 5102-1994
Operating Temperature Range		–25˚C to 70˚C		
Maximun Rated Voltage		5.5 VDC, 11.0 VDC		
Nominal Capacitance Range		0.047 to 1.0 F (Refer to standard ratings)		
Capacitance Allowance		+80 %, –20 %		See characteristics measuring conditions
Equivalent Series Resistance		See standard list		See characteristics measuring conditions
Current (30-minute value)		See standard list		See characteristics measuring conditions
Temperature Variation of Characteristics	At min. temp. (–25˚C Step 2)	Capacitance	More than 70 % of initial value	Conforms to 7.14 Phase 1 : +25±2.0˚C Phase 2 : –25±2.0˚C Phase 3 : +25±2.0˚C Phase 4 : +70±2.0˚C Phase 5 : +25±2.0˚C
		Equivalent Series Resistance	Not to exceed 3 times initial value	
	At max. temp. (+70˚C Step 4)	Capacitance	Not to exceed 150 % of initial value	
		Equivalent Series Resistance	Not to exceed initial requirement	
		Current at 30 minutes	Not to exceed 1.5 CV (mA)	
	At room temp. (+25˚C Step 5)	Capacitance	Not to change more than ±20 % from initial value	
		Equivalent Series Resistance	Not to exceed initial requirement	
		Current at 30 minutes	Not to exceed initial requirement	
Lead Strength (Tensile)		No loosening or permanent damage of the leads		Conforms to 8.1.2 (1) 5.5 VDC: 0.047 F to 0.22 F: 1 kg 10 sec 5.5 VDC: 0.47 F to 1.0 F: 2.5 kg 10 sec 11 VDC: 0.022 F to 0.1 F: 1 kg 10 sec 11 VDC: 0.22 F to 0.47 F: 2.5 kg 10 sec
Vibration Resistance		Capacitance	Meet initial requirement	Conforms to 8.2.3 Frequency: 10 to 55 Hz Test duration: 6 hours
		Equivalent Series Resistance	Meet initial requirement	
		Current at 30 minutes	Meet initial requirement	
Solderability		3/4 or more of the pin surface should be covered with new solder		Conforms to 8.4 230 ± 5˚C, 5 ± 0.5 sec. Immersion depth: 2.5 mm from body
Soldering Heat Resistance		Capacitance	Meet initial requirement	Conforms to 8.5 260 ±10˚C, 10 ±1 sec. Immersion depth: 2.5 mm from body
		Equivalent Series Resistance	Meet initial requirement	
		Current at 30 minutes	Meet initial requirement	
Temperature Cycle		Capacitance	Meet initial requirement	Conforms to 9.3 Temperature conitiom: –25˚C → normal temperature →+70˚C normal temperature Number of cycles : 5 cycles
		Equivalent Series Resistance	Meet initial requirement	
		Current at 30 minutes	Meet initial requirement	
Humidity Resistance		Capacitance	More than 90 % of initial requirement	Conforms to 9.5 40 ± 2˚C, 90 to 95 % RH 240 ± 8 hours
		Equivalent Series Resistance	Not to exceed 120 % of initial requirement	
		Current at 30 minutes	Not to exceed 120 % of initial requirement	
High Temperature Load		Capacitance	More than 85 % of initial requirement	Conforms to 9.10 70 ± 2˚C 5.5 V applied for 5 V type 11 V applied for 10 V type 1 000 $^{+48}_{-0}$ hours
		Equivalent Series Resistance	Not to exceed 120 % of initial requirement	
		Current at 30 minutes	Not to exceed 200 % of initial requirement	

FE Series for Large Backup Current Capacitors

The FE series offers small, high-capacitance electric double-layer capacitors suitable for supplying a large current in a short time.
These capacitors are ideal for momentarily backing up a large-current, short-time load in an electronic system (in the event of momentary power failure)

Features

- Extremely low equivalent series resistance (ESR), ideal for supplying several 10 mA to 1 A for short periods of time (about 1/2 the CV value when compared to the ESR of FA series)
- Small (about 1/4 in volume of aluminum electrolytic capacitor and 3/5 of FA series at same CV value)
- Product variety, including low-capacitance and high-capacitance models (0.047 F to 1.5 F)

Applications

Momentary backup sources for microcomputers, SRAMs, and DRAMs, and auxiliary power source for mechanical systems (motors, relays, electromagnetic valves).

Part Number System

FE 0H 473 Z

- Z — Capacitance tolerance: +80%, –20%
- 473 — Capacitance: 0.047 F
  First two digits represent significant figures.
  Third digit specifies number of zeros to follow microfarad code.
- 0H — Maximum rated voltage: 5.5 V
- FE — Super Capacitor: FE series

Markings

Markings are made with black ink on the green sleeve.

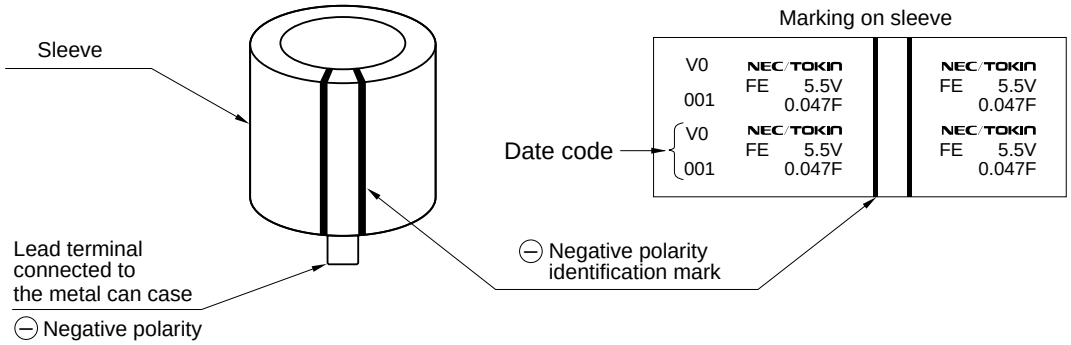

Dimensions And Standard Ratings

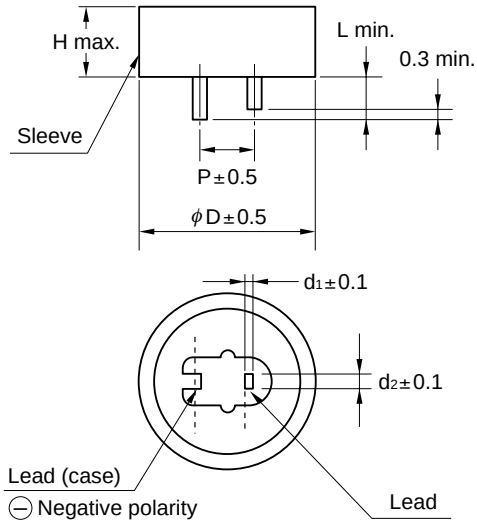

Part No.	Dimensions mm (inch)						Weight
	D	H	P	d_1	d_2	L	g (oz)
FE0H473Z	14.5 (0.57)	14.0 (0.55)	5.1 (0.2)	0.4 (0.016)	1.2 (0.047)	2.2 (0.087)	3.9 (0.138)
FE0H104Z	16.5 (0.65)	14.0 (0.55)	5.1 (0.2)	0.4 (0.016)	1.2 (0.047)	2.7 (0.106)	5 (0.177)
FE0H224Z	21.5 (0.85)	15.5 (0.61)	7.6 (0.3)	0.6 (0.024)	1.2 (0.047)	3.0 (0.118)	9.5 (0.336)
FE0H474Z	28.5 (1.12)	16.5 (0.65)	10.2 (0.4)	0.6 (0.024)	1.4 (0.055)	6.1 (0.240)	16 (0.565)
FE0H105Z	36.5 (1.44)	18.5 (0.73)	15.0 (0.59)	0.6 (0.024)	1.7 (0.067)	6.1 (0.240)	38 (1.343)
FE0H155Z	44.5 (1.75)	18.5 (0.73)	20.0 (0.79)	1.0 (0.039)	1.4 (0.055)	6.1 (0.240)	72 (2.544)

Part Number	Max. Rated Voltage (V)	Nominal Capacitance Charge System (F)	Discharge System (F)	Max. Current at 30 minutes (mA)	Max. ESR (at 1 kHz) (Ω)
FE0H473Z	5.5	0.047	0.075	0.071	14.0
FE0H104Z	5.5	0.10	0.16	0.15	6.5
FE0H224Z	5.5	0.22	0.35	0.33	3.5
FE0H474Z	5.5	0.47	0.75	0.71	1.8
FE0H105Z	5.5	1.0	1.4	1.5	1.0
FE0H155Z	5.5	1.5	2.1	2.3	0.6

Specifications

Item		Specification		Test Conditions Conforming to JIS C 5102-1994
Operating Temperature Range		–40˚C to 70˚C		
Maximun Rated Voltage		5.5 VDC		
Nominal Capacitance Range		0.047 to 1.5 F (Refer to standard ratings)		
Capacitance Allowance		+80 %, –20 %		See characteristics measuring conditions
Equivalent Series Resistance		See standard list		See characteristics measuring conditions
Current (30-minute value)		See standard list		See characteristics measuring conditions
Surge Voltage		Capacitance	More than 90 % of initial requirement	Conforms to 7.14 At 70˚C Surge voltage 6.3 V Temperature : 70±2˚C Charge: 30 sec. Discharge: 9 min. 30 sec. 1 000 cycles Charge resistance : 0.047 F 300 Ω 0.10 F 150 Ω 0.22 F 56 Ω 0.47 F 30 Ω 1.0, 1.5 F 15 Ω Discharge resistance: Not applicable (0 Ω)
		Equivalent Series Resistance	Not to exceed 120 % of initial requirement	
		Current at 30 minutes	Not to exceed 120 % of initial requirement	
Temperature Variation of Characteristics	Phase 3	Capacitance	More than 40 % of initial value	Conforms to 7.12 Phase 1: +25 ± 2˚C Phase 2: –25 ± 2˚C Phase 3: –40 ± 2˚C Phase 4: +25 ± 2˚C Phase 5: +70 ± 2˚C Phase 6: +25 ± 2˚C
		Equivalent Series Resistance	Not to exceed 4 times initial value	
	Phase 5	Capacitance	Not to exceed 200 % of initial value	
		Equivalent Series Resistance	Not to exceed initial requirement	
		Current at 30 minutes	Not to exceed 1.5 CV (mA)	
	Phase 6	Capacitance	Within ±20 % of initial value	
		Equivalent Series Resistance	Not to exceed initial requirement	
		Current at 30 minutes	Not to exceed initial requirement	
Lead Strength (Tensile)		No loosening nor permanent damage of the leads		Conforms to 8.1.2 (1) 0.047 to 0.47 F: 1 kg, 10 sec. 1 F, 1.5 F : 2.5 kg, 10 sec.
Vibration Resistance		Capacitance	Meet initial requirement	Conforms to 8.2.3 Frequency: 10 to 55 Hz Test duration: 6 hours
		Equivalent Series Resistance	Meet initial requirement	
		Current at 30 minutes	Meet initial requirement	
Solderability		3/4 or more of the pin surface should be covered with new solder		Conforms to 8.4 230 ±5˚C Immersion depth: 5 ±0.5 sec. 1.6 mm from body
Soldering Heat Resistance		Capacitance	Meet initial requirement	Conforms to 8.5 260 ±10˚C, 10 ±1 sec. Immersion depth : 1.6 mm from body
		Equivalent Series Resistance	Meet initial requirement	
		Current at 30 minutes	Meet initial requirement	
Temperature Cycle		Capacitance	Shall meet initial requirement	Conforms to 9.3 Temperature condition: –40˚C → normal temperture → +70˚C → normal temperture Number of cycles : 5 cycles
		Equivalent Series Resistance	Meet initial requirement	
		Current at 30 minutes	Meet initial requirement	
Humidity Resistance		Capacitance change	Within ±20 % of initial value	Conforms to 9.5 40 ±2˚C, 90 to 95 % RH 240 hours 240 ± 8 hours
		Equivalent Series Resistance	Not to exceed 120 % of initial requirement	
		Current at 30 minutes	Not to exceed 120 % of initial requirement	
High Temperature Load		Capacitance change	Within ±30 % of initial value	Conforms to 9.10 70 ±2˚C 5.5 V applied 1 000 $^{+48}_{-0}$ hours
		Equivalent Series Resistance	Not to exceed 300 % of initial requirement	
		Current at 30 minutes	Not to exceed 200 % of initial requirement	

FS Series

The FS series Super Capacitors are ideal as short-time (30 minutes max.) backup devices in small and lightweight systems. 5.5 VDC (0.022 F to 1.0 F), 11 VDC (0.47 F and 1.0 F only) and 12 VDC (1.0 F and 5.0 F only)

Features

- Ideal for supplying current of several hundred μA to several mA for short time

Applications

- Backup source for microcomputers and buffer for momentary high-current loads (for example, motors)

Part Number System

FS 0H 473 Z

- **Z** — Capacitance tolerance: +80%, –20%
- **473** — Capacitance: 0.047 F
  First two digits represent significant figures.
  Third digit specifies number of zeros to follow microfarad code.
- **0H** — Maximum rated voltage:
  0 H: 5.5 VDC
  1 A: 11 VDC
  1 B: 12 VDC
- **FS** — Super Capacitor: FS series

Markings

Markings are made with black ink on the green sleeve.

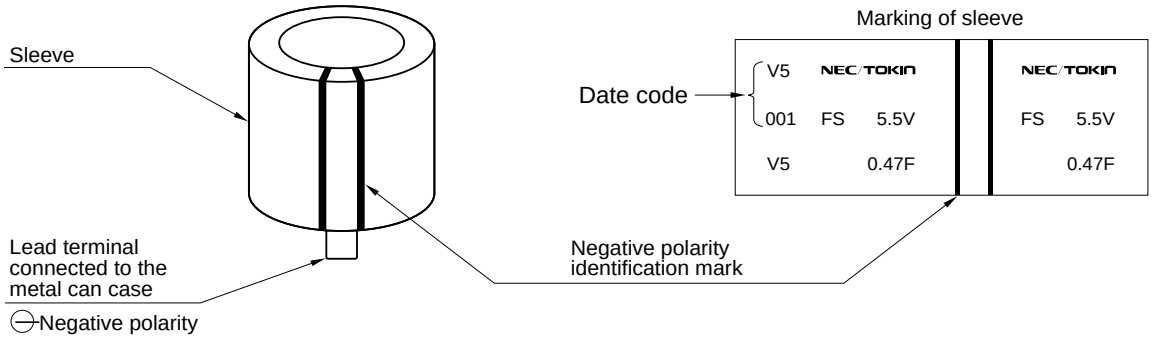

Dimensions and Standard Ratings

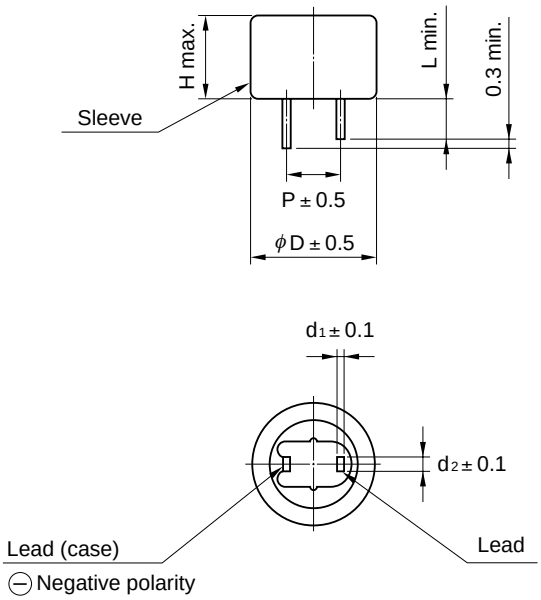

Part No.	Dimensions mm (inch)						Weight
	D	H	P	d_1	d_2	L	g (oz)
FS0H223Z	11.5 (0.453)	8.5 (0.335)	5.08 (0.200)	0.4 (0.016)	1.2 (0.047)	2.7 (0.106)	1.6 (0.057)
FS0H473Z	13.0 (0.512)	8.5 (0.335)	5.08 (0.200)	0.4 (0.016)	1.2 (0.047)	2.2 (0.087)	2.6 (0.092)
FS0H104Z	16.5 (0.650)	8.5 (0.335)	5.08 (0.200)	0.4 (0.016)	1.2 (0.047)	2.7 (0.106)	4.1 (0.145)
FS0H224Z	16.5 (0.650)	13.0 (0.512)	5.08 (0.200)	0.4 (0.016)	1.2 (0.047)	2.7 (0.106)	5.3 (0.187)
FS0H474Z	21.5 (0.846)	13.0 (0.512)	7.62 (0.300)	0.6 (0.024)	1.2 (0.047)	3.0 (0.118)	10 (0.353)
FS0H105Z	28.5 (1.122)	14.0 (0.551)	10.16 (0.400)	0.6 (0.024)	1.4 (0.055)	6.1 (0.240)	18 (0.635)
FS1A474Z	28.5 (1.122)	25.5 (1.004)	10.16 (0.400)	0.6 (0.024)	1.4 (0.055)	6.1 (0.240)	32.0 (1.129)
FS1A105Z	28.5 (1.122)	31.5 (1.240)	10.16 (0.400)	0.6 (0.024)	1.4 (0.055)	6.1 (0.240)	35.0 (1.235)
FS1B105Z	28.5 (1.122)	38.0 (1.496)	10.16 (0.400)	0.6 (0.024)	1.4 (0.055)	6.1 (0.240)	40 (1.411)
FS1B505Z	44.8 (1.764)	60.0 (2.361)	20.0 (0.787)	1.0 (0.040)	1.4 (0.055)	9.5 (0.240)	160 (5.644)

Note: Weight is typical.

Part Number	Max. Rated Voltage (V)	Nomial Capacitance		Max. ESR (at 1 kHz) (Ω)	Max. Current at 30 minutes (at 1 kHz) (mA)
		Charge System (F)	Discharge System (F)		
FS0H223Z	5.5	0.022	0.033	60	0.033
FS0H473Z	5.5	0.047	0.072	40	0.071
FS0H104Z	5.5	0.10	0.15	25	0.15
FS0H224Z	5.5	0.22	0.33	25	0.33
FS0H474Z	5.5	0.47	0.75	13	0.71
FS0H105Z	5.5	1.0	1.3	7	1.5
FS1A474Z	11.0	0.47	0.60	7	1.41
FS1A105Z	11.0	1.0	1.3	7	3.0
FS1B105Z	12.0	1.0	1.3	7.5	3.6
FS1B505Z	12.0	5.0	6.5	4.0	18.0

Specifications

Item		Standard		Test Conditions Conforming to JIS C 5102-1994
Operating Temperature Range		–25°C to +70˚C		
Maximum Operating Voltage		5.5 VDC, 11 VDC, 12 VDC		
Nominal Capacitance Range		0.022 to 1.0 F (5.5 V products), 0.47 F to 1.0 F (11 V products), 1.0 F to 5.0 F (12 V products)		See characteristics measuring method.
Capacitance Allowance		+80%, –20%		
Equivalent Series Resistance		See standard list		See characteristics measuring method.
Current (30-minutes value)		See standard list		See characteristics measuring method.
Surge Voltage		Capacitance	More than 90% of initial requirement	Conforms to 7.14 Surge voltage: 6.3 V (5.5 V products) 12.6 V (11 V products) 13.6 V (12 V products) Temperature: 70 ± 2˚C Chargs: 30 seconds Discharge: 9 min. 30 sec. Number of cycles 1000 cycles. Series resistance: 0.022 F 560 Ω 0.047 F 300 Ω 0.1 F 150 Ω 0.22 F 56 Ω 0.47 F 30 Ω 1 F 15 Ω 5 F 10 Ω Discharge resistance: 0 Ω
		Equivalent series resistance	Not to exceed 120% of initial requirement	
		Current (30-minute value)	Not to exceed 120% of initial requirement	
		Appearance	No obvious abnormality	
Temperature Variation of Characteristics	Phase 2	Capacitance	50% or higher of initial value	Conforms to 7.12 Phase 1: +25 ± 2°C Phase 2: –25 ± 2°C Phase 3: –40 ± 2°C Phase 4: +25 ± 2°C Phase 5: +70 ± 2°C Phase 6: +25 ± 2°C
		Equivalent series resistance	3 or less times initial value	
	Phase 5	Capacitance	150% or below of initial value	
		Equivalent series resistance	Satisty initial standard value	
		Current (30-minute value)	1.5 CV (mA) or below	
	Phase 6	Capacitance	Within ± 20% of initial value	
		Equivalent series resistance	Satisty initial standard value	
		Current (30-minute value)	Satisty initial standard value	
Lead Strengh (Tensile)		No loosening nor permanent damage of the leads		Conforms to 8.1.2 (1) 5.5 VDC: 0.022 F to 0.22 F: 1 kg 10 sec 5.5 VDC: 0.47 F to 1.0 F: 2.5 kg 10 sec 11 VDC: 2.5 kg 10 sec 12 VDC: 2.5 kg 10 sec
Vibration Resistance		Capacitance	Satisty initial standard value	Conforms to 8.2.3 Frequency: 10 to 55 Hz Test duration: 6 hours
		Equivalent series resistance		
		Current (30-minute value)		
		Appearance	No obvious abnormality	
Solderability		3/4 or more of the pin surface should be covered with new solder		Conforms to 8.4 Solder temperature: 230 ± 5°C Dipping duration: 5 ± 0.5 sec. Should be dipped up to 1.6 mm from the lower end of the capacitor.
Soldering Heat Resistance		Capacitance	Satisty initial standard value	Conforms to 8.5 Solder temperature: 260 ± 10°C Dipping duration: 10 ± 1 sec. Dipped up to 1.6 mm from the lower end of the capacitor.
		Equivalent series resistance		
		Current (30-minute value)		
		Appearance	No obvious abnormality	
Temperature Cycle		Capacitance	Satisty initial standard value	Conforms to 9.3 Temperature condition: –25°C → normal temperature → +70°C → normal temperature Number of cycles: 5 cycles
		Equivalent series resistance		
		Current (30-minute value)		
		Appearance	No obvious abnormality	
Humidity Resistance		Capacitance	90% or higher of initial standard value (5.5 V products) Within 20% of initial value (11 V, 12 V products)	Conforms to 9.5 Temperature: 40 ± 2°C Relative humidity: 90 to 95% RH Test duration: 240 ± 8 hours
		Equivalent series resistance	1.2 or less times initial standard value	
		Current (30-minute value)	1.2 or less times initial standard value	
		Appearance	No obvious abnormality	
High Temperature Load		Capacitance	85% or higher of initial standard value (5.5 V products) Within ±30% of initial value (11 V, 12 V products)	Conforms to 9.10 Temperature: 70 ± 2°C Voltage applied: Maximum operating voltage Series protection resistance: 0 Ω Test duration: 1000^{+48}_{0} hours
		Equivalent series resistance	Twice or less times initial standard value	
		Current (30-minute value)	Twice or less times initial standard value	
		Appearance	No obvious abnormality	

FR Series Wide Temperature Range Capacitor [–40˚C to +85˚C]

The FR series Super Capacitors are small-size electric double-layer capacitors that can operate in a temperature range as wide as –40˚C to +85˚C.
These capacitors are ideal as long-time backup devices for minute current loads in industrial equipment such as measuring instruments, control equipment, and communications equipment.

Features

- Wide operating temperature range: –40˚C to +85˚C
- High reliability (Ioad life of 85˚C, 5.5 V, 1000 hours guaranteed)
- Excellent voltage holding characteristics ideal for long-time current supply of 1 μA to several hundred μA

Applications

Backup of CMOS microcomputers, static RAMs, and DTSs (digital tuning systems)

Part Number System

FR 0H 223 Z

- **Z** — Capacitance tolerance:
  Z: +80%, –20%
- **223** — Nominal capacitance: 0.022 F
  First two digits represent significant figures.
  Third digit specifies number of zeros to follow.
- **0H** — Maximum rated voltage:
  0H: 5.5 VDC
- **FR** — Super Capacitor: FR series

Markings

Markings are made with black ink on the green sleeve.

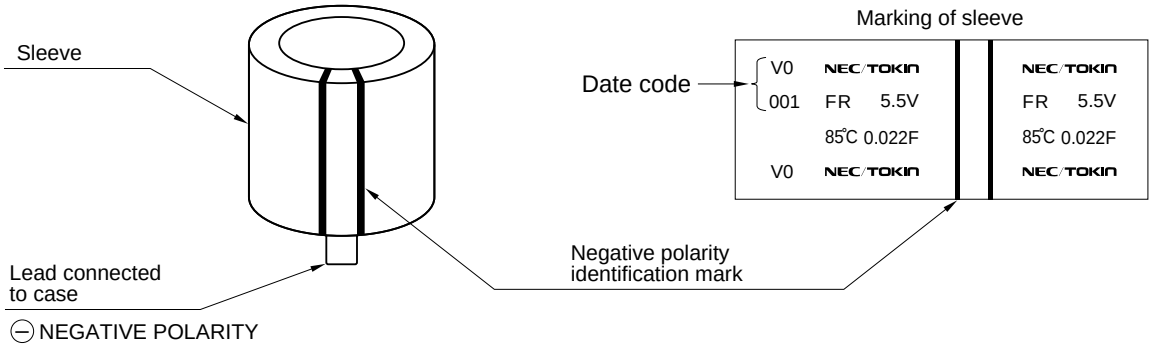

Dimensions and Standard Ratings

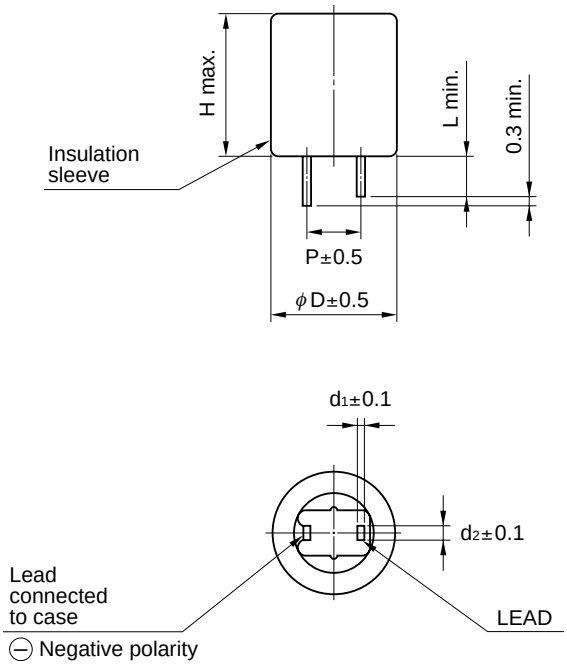

Part No.	Dimensions mm (inch)						Weight
	D	H	P	d_1	d_2	L	g (oz)
FR0H223Z	11.5 (0.453)	14.0 (0.551)	5.08 (0.200)	0.4 (0.016)	1.2 (0.047)	2.7 (0.106)	2.3 (0.081)
FR0H473Z	14.5 (0.571)	14.0 (0.551)	5.08 (0.200)	0.4 (0.016)	1.2 (0.047)	2.4 (0.095)	3.9 (0.138)
FR0H104Z	14.5 (0.571)	15.5 (0.610)	5.08 (0.200)	0.4 (0.016)	1.2 (0.047)	2.4 (0.095)	4.3 (0.152)
FR0H224Z	14.5 (0.571)	21.0 (0.827)	5.08 (0.200)	0.4 (0.016)	1.2 (0.047)	2.4 (0.095)	5.3 (0.187)
FR0H474Z	16.5 (0.650)	21.5 (0.846)	5.08 (0.200)	0.4 (0.016)	1.2 (0.047)	2.7 (0.106)	7.5 (0.265)
FR0H105Z	21.5 (0.850)	22.0 (0.866)	7.62 (0.300)	0.6 (0.024)	1.2 (0.047)	3.0 (0.118)	13.3 (0.470)

Note: Weight is typical.

Part Number	Max. Rated Voltage (V)	Nomial Capacitance		Max. ESR (at 1 kHz) (Ω)	Max. Current at 30 minutes (mA)	Voltage Holding Characteristic Min. (V)
		Charge System (F)	Discharge System (F)			
FR0H223Z	5.5	0.022	0.028	220	0.033	4.2
FR0H473Z	5.5	0.047	0.060	110	0.071	4.2
FR0H104Z	5.5	0.10	0.15	150	0.15	4.2
FR0H224Z	5.5	0.22	0.33	180	0.33	4.2
FR0H474Z	5.5	0.47	0.75	100	0.71	4.2
FR0H105Z	5.5	1.0	1.6	60	1.5	4.2

Specifications

Item		Specification		Test Conditions Conforming to JIS C 5102-1994
Operating Temperature Range		–40˚C to +85˚C		
Maximun Working Voltage		5.5 Vdc		
Nominal Capacitance Range		0.022 to 1.0 F (Refer to standard ratings)		
Capacitance Allowance		+80 %, –20 %		See characteristics measuring conditions
Equivalent Series Resistance		See standard list		See characteristics measuring conditions
Current (30-minute Value)		See standard list		See characteristics measuring conditions
Surge Voltage		Capacitance	More than 90 % of initial requirement	Conform to 7.14 Surge voltage 6.3 V Temperature : 85± 2˚C Charge: 30 sec. Discharge: 9 min. 30 sec. 1 000 cycles Charge resistance: 0.022 F 560 Ω 0.047 F 300 Ω 0.10 F 150 Ω 0.22 F 56 Ω 0.47 F 30 Ω 1.0 F 15 Ω Discharge resistance: Not applicable (0 Ω)
		Equivalent Series Resistance	Not to exceed 120 % of initial requirement	
		Current at 30 minutes	Not to exceed 120 % of initial requirement	
Temperature Variation of Characteristics	Phase 2	Capacitance	More than 50 % of initial value	Conform to 7.12 Phase 1: +25 ±2˚C Phase 2: –25 ±2˚C Phase 3: –40 ±2˚C Phase 4: +25 ±2˚C Phase 5: +85 ±2˚C Phase 6: +25 ±2˚C
		Equivalent Series Resistance	Not to exceed 4 times initial value	
	Phase 3	Capacitance	More than 30 % of initial value	
		Equivalent Series Resistance	Not to exceed 7 times initial value	
	Phase 5	Capacitance	Not to exceed 200 % of initial value	
		Equivalent Series Resistance	Not to exceed initial requirement	
		Current at 30 minutes	Not to exceed 1.5 CV (mA)	
	Phase 6	Capacitance	Within ±20 % of initial value	
		Equivalent Series Resistance	Not to exceed initial requirement	
		Current at 30 minutes	Not to exceed initial requirement	
Lead Strength (Tensile)		No loosening nor permanent damage of the leads		Conform to 8.1.2 (1) 0.022 to 0.47 F: 1 kg, 10 sec. 1 F: 2.5 kg, 10 sec.
Vibration Resietance		Capacitance	Meet initial requirement	Conform to 8.2.3 Frequency: 10 to 55 Hz Test duration: 6 hours
		Equivalent Series Resistance	Meet initial requirement	
		Current at 30 minutes	Meet initial requirement	
Solderability		3/4 or more of the pin surface shoud be covered with new solder		Conform to 8.4 230 ± 5˚C 5 ± 0.5 sec. 1.6 mm from body
Soldering Heat Resistance		Capacitance	Meet initial requirement	Conform to 8.5 260 ± 10˚C, 10 ± 1 sec. Immersion depth: 1.6 mm from body
		Equivalent Series Resistance	Meet initial requirement	
		Current at 30 minutes	Meet initial requirement	
Temperature Cycle		Capacitance	Meet initial requirement	Conform to 9.3 Temperature condition: –40°C → normal temperature → +85°C → normal temperature Number of cycles: 5 cycles
		Equivalent Series Resistance	Meet initial requirement	
		Current at 30 minutes	Meet initial requirement	
Humidity Resistance		Capacitance	Within ± 20% of initial value	Conform to 9.5 40 ± 2˚C, 90 to 95% RH 240 ± 8 hours
		Equivalent Series Resistance	Not to exceed120 % of initial requirement	
		Current at 30 minutes	Not to exceed120 % of initial requirement	

<table>
<tr><th>Item</th><th colspan="2">Specification</th><th colspan="2">Test Conditions
Conforming to JIS C 5102-1994</th></tr>
<tr><td rowspan="3">High Temperature Load</td><td>Capacitance change</td><td>Within ±30% of initial value</td><td colspan="2" rowspan="3">Conforms to 9.10
Temperature: 85 ± 2°C
Series resistance: 0 Ω
Applied voltage: 5.5 VDC
Time of test: 1000 $^{+48}_{-0}$ hours</td></tr>
<tr><td>Equivalent Series Resistance</td><td>Not to exceed 200% of initial requirement</td></tr>
<tr><td>Current at 30 minutes</td><td>Not to exceed 200% of initial requirement</td></tr>
<tr><td rowspan="2">Voltage Holding Characteristics</td><td colspan="2" rowspan="2">Voltage between terminal leads higher than 4.2V</td><td>Charging</td><td>(1) Applied Voltage: 5.0 V
(2) Series Resistance: 0 Ω
(3) Charging time: 24 h</td></tr>
<tr><td>Storege</td><td>(1) Load: Nothing
(2) Temp.: Less than 25°C
(3) Humidity: Less than 70% RH
(4) Storage time: 24 h</td></tr>
</table>

3.5 V, 6.5 V Rated Voltage Series FSH Type, FYD Type

These 3.5 V and, 6.5 V rated voltage are suitable for use in portable or battery-driven equipment.
These capacitors are especially ideal as backup devices for cameras, remote controllers, headphone and stereos.

Features

- The FSH-type is ideal for supplying several hundred μA to several mA for a short time. The FYD type is ideal for backup of 1 μA to several hundred μA for a long time.
- Smaller than existing series (25% less than FS series in C•V per volume)

Applications

- Secondary backup power supply for cameras to charge an electronic flash (FSH type)
- Secondary backup power supply for motors (FSH-type)
- Backup of CMOS microprocessors, SRAMs, DTS ICs to charge the battery

Part Number System

FSH 0V 433 Z

- Z: Capacitance tolerance:
  Z: +80%, –20%
- 433: Capacitance: 0.043 F
  First two digits represent significant figures.
  Third digit specifies number of zeros to follow μF code.
- 0V: Maximum rated voltage
  0V: 3.5 VDC
  0J: 6.5 VDC
- FSH: Super Capacitor: FSH-type
  FYD-type

Markings

Markings are made with black ink on the green sleeve.

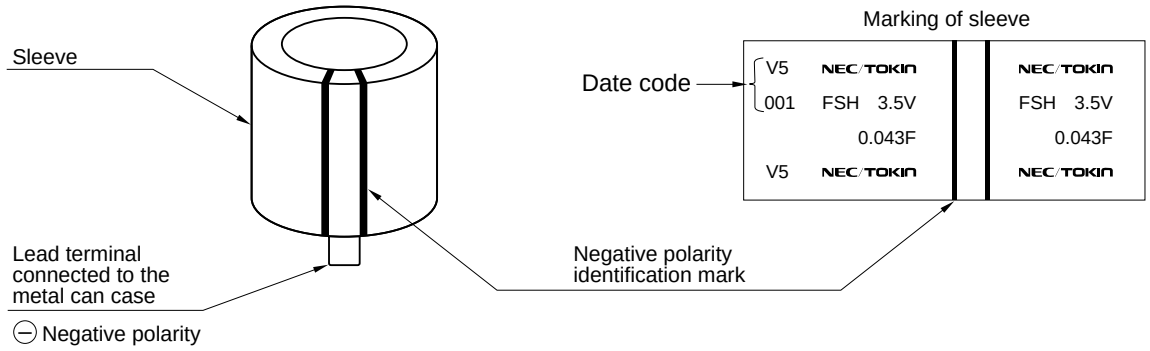

Dimensions and Standard Ratings

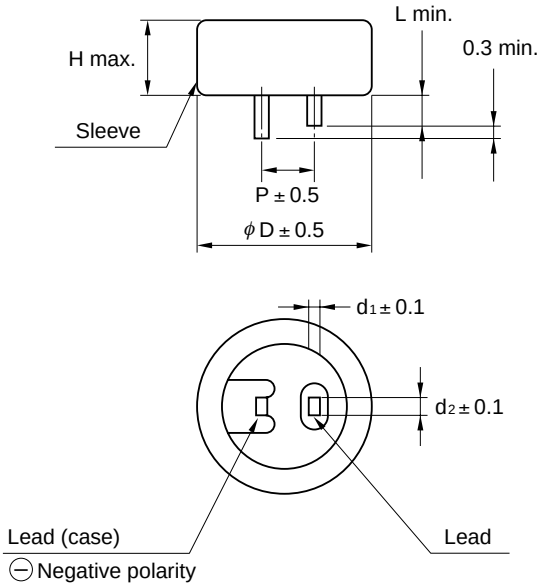

Part No.	Dimensions mm (inch)						Weight
	D	H	P	d_1	d_2	L	g (oz)
FSH0V433Z	11.0 (0.413)	5.2 (0.205)	5.08 (0.2)	0.2 (0.008)	1.2 (0.047)	2.7 (0.106)	1.0 (0.035)
FYD0V563Z	11.0 (0.413)	5.2 (0.205)	5.08 (0.2)	0.2 (0.008)	1.2 (0.047)	2.7 (0.106)	1.0 (0.035)
FSH0J223Z	11.5 (0.453)	8.5 (0.355)	5.08 (0.2)	0.4 (0.016)	1.2 (0.047)	2.7 (0.106)	1.7 (0.060)
FYD0J273Z	11.5 (0.453)	8.5 (0.355)	5.08 (0.2)	0.4 (0.016)	1.2 (0.047)	2.7 (0.106)	1.6 (0.056)

Note: The weight values are typical.

Part Number	Max. Rated Voltage (V)	Nomial Capacitance		Max. ESR (at 1 kHz) (Ω)	Max. Current at 30 minutes (mA)
		ChargeSystem (F)	DischargeSystem (F)		
FSH0V433Z	3.5	0.043	0.055	50	0.039
FYD0V563Z	3.5	0.056	0.070	150	0.050
FSH0J223Z	6.5	0.022	0.033	60	0.040
FYD0J273Z	6.5	0.027	0.040	200	0.049

Specifications

Items		Specifications		Test Conditions Conforming to JIS C 5102-1994
Operating Temperature Range		–25˚C to +70˚C		
Maximum Rated Voltage		3.5 VDC, 6.5 VDC		
Nominal Capacitance Range		See standard ratings		
Capacitance Allowance		+80 %, –20 %		See characteristics measuring conditions
Equivalent Series Resistance		See standard list		See characteristics measuring conditions
Current (30-minutes value)		See standard list		See characteristics measuring conditions
Surge Voltage		Capacitance	More than 90 % of initial requirement	Conforms to 7.14 Surge voltage: 4.0 V (3.5 VDC), 7.4 V (6.5 VDC) rated part rated part Temperature: 70±2˚C Charging for 30 seconds Discharging for 9 min 30 sec. Number of cycles: 1 000 cycles Charge resistance: 0.022 F 560 Ω 0.027 F 560 Ω 0.043 F 300 Ω 0.056 F 240 Ω No discharge resistance
		Equivalent Series Resistance	Less than 200% of initial requirement	
		Current 30 minutes	Less than 120% of initial requirement	
		Appearance	No significant change	
Temperature Variation of Characteristics	Phase 2	Capacitance	More than 50 % of initial value	Conforms to 7.12 Phase 1: +25 ±2˚C Phase 2: –25 ±2˚C Phase 3: –40 ±2˚C Phase 4: +25 ±2˚C Phase 5: +70 ±2˚C Phase 6: +25 ±2˚C
		Equivalent Series Resistance	Less than 400% of initial value	
	Phase 5	Capacitance	Less than 200% of initial value	
		Equivalent Series Resistance	Initial requirement	
		Current 30 minutes	Less than 1.5 CV (mA)	
	Phase 6	Capacitance	Within ±20% of initial value	
		Equivalent Series Resistance	Initial requirement	
		Current 30 minutes	Initial requirement	
Vibration Resistance		Capacitance	Shall meet initial requirements	Conforms to 8.2.3 Frequency: 10 to 55 Hz Time of test: 6 hours
		Equivalent Series Resistance		
		Current 30 minutes		
		Appearance	No significant change	
Solderability		3/ 4 or more of the pin surface should be covered with new solder		Conforms to 8.4 Temperature of solder: 230 ± 5˚C Time of immersion: 5 ± 0.5 seconds To immerse capacitors up to 1.6 mm from the bottom
Soldering Heat Resistance		Capacitance	Shall meet initial requirements	Conforms to 8.5 Temperature of solder: 260 ± 10˚C Time of immersion: 10 ± 1 seconds To immerse capacitors up to 1.6 mm from the bottom
		Equivalent Series Resistance		
		Current 30 minutes		
		Appearance	No significant change	
Temperature Cycle		Capacitance	Shall meet initial requirements	Conforms to 9.3 Temperature condition: –25˚C → normal temperature → +70˚C → normal temperature Number of cycles: 5 cycles
		Equivalent Series Resistance		
		Current 30 minutes		
		Appearance	No significant change	
Humidity Resistance		Capacitance	Within ±20% of initial value	Conforms to 9.5 Temperature: 40 ± 2˚C Humidity: 90 to 95% RH Time of test: 240 ± 8 hours
		Equivalent Series Resistance	Less than 200% of initial requirement	
		Current 30 minutes	Less than 120% of initial requirement	
		Appearance	No significant change	
High Temperature Load		Capacitance	Within ±30% of initial requirement	Conforms to 9.10 Temperature: 70 ± 2˚C Series resistance: 0 Ω Applied voltage: 3.5 VDC, 6.5 VDC Time of test: 1000^{+48}_{-0} hours
		Equivalent Series Resistance	Less than 300% of initial requirement	
		Current 30 minutes	Less than 200% of initial requirement	
		Appearance	No significant change	

FY Series

FYD TYPE: SMALL DIAMETER, EXCELLENT VOLTAGE HOLDING CHARACTERISTICS
FYH, and FYL TYPE: LOW PROFILE, EXCELLENT VOLTAGE HOLDING CHARACTERISTICS

The FY series includes small-size electric double-layer capacitors with excellent voltage holding characteristics. The FYD type occupies only a small area on a printed circuit board, and the FYH and FYL types feature a low profile in height, so that they can be used in various systems.
These capacitors are ideal as long-time backup devices for minute-current loads in small and lightweight systems.

Features

- Product variety makes the FYD, FYH, and FYL types suitable for use in many types of application systems.
- Excellent voltage holding characteristics ideal for backup of 1 μA to several hundred μA.
- Smaller than other Super Capacitors (25% less than FS series in volume)
- Capacitance ranges from low to high (0.01 F to 2.2 F).

Applications

- Backup of CMOS microcomputers, static RAMs, DTSs (digital tuning systems)
- Memory backup of remote controllers and handy cassette player during battery exchange

Part Number System

FYD 0H 473 Z

- **Z** — Capacitance tolerance:
  Z: +80%, –20%
- **473** — Capacitance: 0.047 F
  First two digits represent significant figures.
  Third digit specifies number of zeros to follow μF code.
- **0H** — Maximum rated voltage:
  0H: 5.5 VDC
- **FYD** — Super Capacitor: FY series type
  FYD: Small-diameter type
  FYH and FYL: Low-profile type

Markings

Markings are made with black ink on the green sleeve.

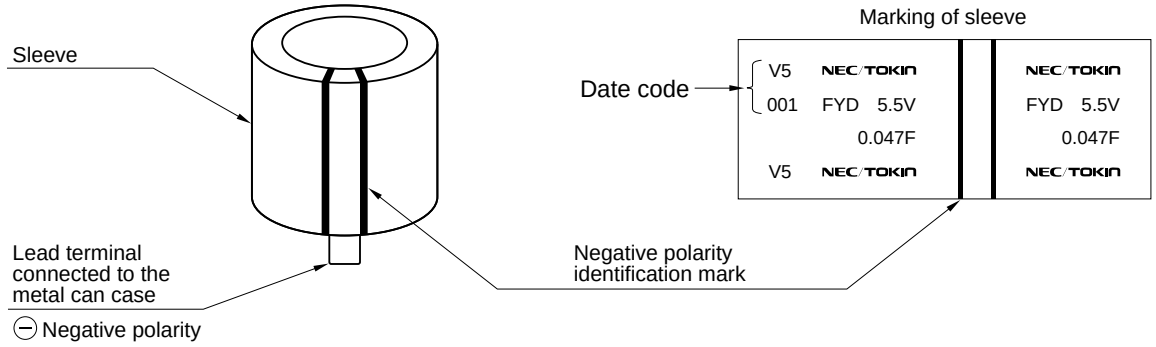

Dimensions and Standard Ratings

● FYD-Type

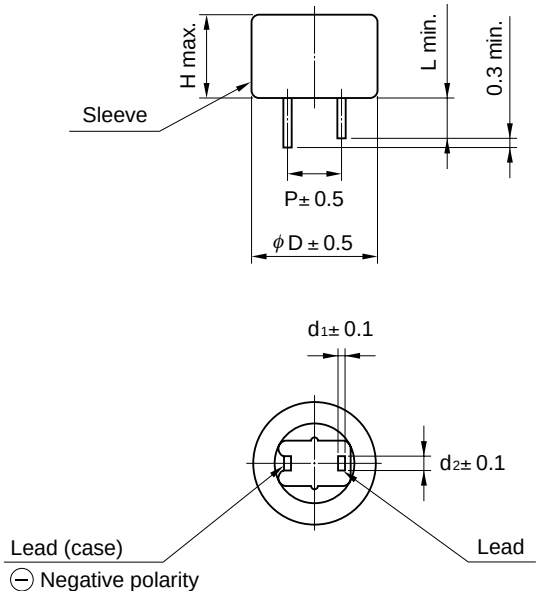

Part No.	Dimensions mm (inch)						Weight
	D	H	P	d_1	d_2	L	g (oz)
FYD0H223Z	11.5 (0.453)	8.5 (0.335)	5.08 (0.200)	0.4 (0.016)	1.2 (0.047)	2.7 (0.106)	1.6 (0.056)
FYD0H473Z	11.5 (0.453)	8.5 (0.335)	5.08 (0.200)	0.4 (0.016)	1.2 (0.047)	2.7 (0.106)	1.7 (0.058)
FYD0H104Z	13.0 (0.512)	8.5 (0.335)	5.08 (0.200)	0.4 (0.016)	1.2 (0.047)	2.2 (0.087)	2.4 (0.085)
FYD0H224Z	14.5 (0.571)	15.0 (0.591)	5.08 (0.200)	0.4 (0.016)	1.2 (0.047)	2.4 (0.095)	4.3 (0.152)
FYD0H474Z	16.5 (0.65)	15.0 (0.591)	5.08 (0.200)	0.4 (0.016)	1.2 (0.047)	2.7 (0.106)	6.0 (0.212)
FYD0H105Z	21.5 (0.85)	16.0 (0.629)	7.62 (0.300)	0.6 (0.024)	1.2 (0.047)	3.0 (0.118)	11.0 (0.338)
FYD0H145Z	21.5 (0.85)	19.0 (0.748)	7.62 (0.300)	0.6 (0.024)	1.2 (0.047)	3.0 (0.118)	12.0 (0.424)
FYD0H225Z	28.5 (1.122)	22.0 (0.866)	10.16 (0.400)	0.6 (0.024)	1.4 (0.055)	6.1 (0.240)	22.9 (0.809)

Note: Weight is typical.

Part Number	Max. Rated Voltage (V)	Nomial Capacitance		Max. ESR (at 1 kHz) (Ω)	Max. Current at 30 minutes (mA)	Voltage Holding Characteristic Min. (V)
		Charge System (F)	Discharge System (F)			
FYD0H223Z	5.5	0.022	0.033	220	0.033	4.2
FYD0H473Z	5.5	0.047	0.070	220	0.071	4.2
FYD0H104Z	5.5	0.10	0.14	100	0.15	4.2
FYD0H224Z	5.5	0.22	0.35	120	0.33	4.2
FYD0H474Z	5.5	0.47	0.75	65	0.71	4.2
FYD0H105Z	5.5	1.0	1.6	35	1.5	4.2
FYD0H145Z	5.5	1.4	2.1	45	2.1	4.2
FYD0H225Z	5.5	2.2	3.3	35	3.3	4.2

● FYH-Type

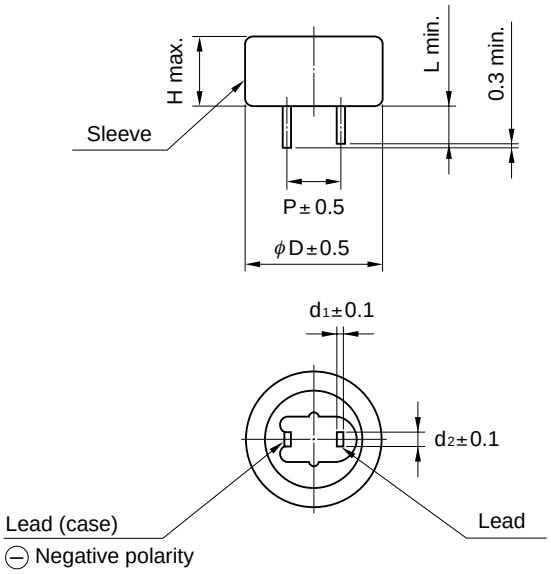

Part No.	Dimensions mm (inch)						Weight
	D	H	P	d_1	d_2	L	g (oz)
FYH0H223Z	11.5 (0.453)	7.0 (0.276)	5.08 (0.200)	0.4 (0.016)	1.2 (0.047)	2.7 (0.106)	1.5 (0.053)
FYH0H473Z	13.0 (0.512)	7.0 (0.276)	5.08 (0.200)	0.4 (0.016)	1.2 (0.047)	2.2 (0.087)	2.2 (0.078)
FYH0H104Z	16.5 (0.65)	7.5 (0.295)	5.08 (0.200)	0.4 (0.016)	1.2 (0.047)	2.7 (0.106)	3.4 (0.120)
FYH0H224Z	16.5 (0.65)	9.5 (0.374)	5.08 (0.200)	0.4 (0.016)	1.2 (0.047)	2.7 (0.106)	3.6 (0.127)
FYH0H474Z	21.5 (0.85)	10.0 (0.394)	7.62 (0.300)	0.6 (0.024)	1.2 (0.047)	3.0 (0.118)	7.2 (0.255)
FYH0H105Z	28.5 (1.122)	11.0 (0.433)	10.16 (0.400)	0.6 (0.024)	1.4 (0.055)	6.1 (0.240)	13.9 (0.491)

Note: Weight is typical.

Part Number	Max. Rated Voltage (V)	Nomial Capacitance		Max. ESR (at 1 kHz) (Ω)	Max. Current at 30 minutes (mA)	Voltage Holding Characteristic Min. (V)
		Charge System (F)	Discharge System (F)			
FYH0H223Z	5.5	0.022	0.033	200	0.033	4.2
FYH0H473Z	5.5	0.047	0.075	100	0.071	4.2
FYH0H104Z	5.5	0.10	0.16	50	0.15	4.2
FYH0H224Z	5.5	0.22	0.30	60	0.33	4.2
FYH0H474Z	5.5	0.47	0.70	35	0.71	4.2
FYH0H105Z	5.5	1.0	0.50	20	1.5	4.2

● FYL-Type

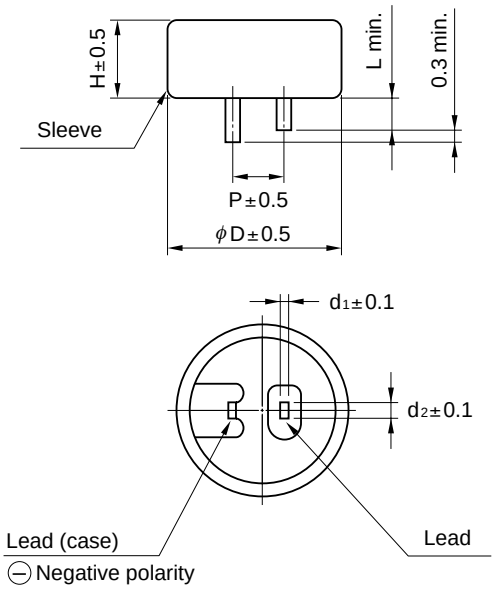

Part No.	Dimensions mm (inch)						Weight
	D	H	P	d_1	d_2	L	g (oz)
FYL0H103Z	11.0 (0.43)	5.0 (0.197)	5.08 (0.200)	0.2 (0.016)	1.2 (0.047)	2.7 (0.106)	0.9 (0.032)
FYL0H223Z	11.0 (0.43)	5.0 (0.197)	5.08 (0.200)	0.2 (0.016)	1.2 (0.047)	2.7 (0.106)	1.0 (0.035)
FYL0H473Z	12.0 (0.47)	5.0 (0.197)	5.08 (0.200)	0.2 (0.016)	1.2 (0.047)	2.7 (0.106)	1.2 (0.042)

Note: Weight is typical.

Part Number	Max. Rated Voltage (V)	Nomial Capacitance		Max. ESR (at 1 kHz) (Ω)	Max. Current at 30 minutes (mA)	Voltage Holding Characteristic Min. (V)
		Charge System (F)	Discharge System (F)			
FYL0H103Z	5.5	0.010	0.013	300	0.015	4.2
FYL0H223Z	5.5	0.022	0.028	200	0.033	4.2
FYL0H473Z	5.5	0.047	0.061	200	0.071	4.2

Specifications

Items		Specifications		Test Conditions Conforming to JIS C 5102-1994	
Operating Temperature Range		–25˚C to +70˚C			
Maximum Operating Voltage		5.5 Vdc			
Nominal Capacitance Range		See standard list			
Capacitance Allowance		+80 %, –20 %		See characteristics measuring conditions	
Equivalent Series Resistance		See standard list		See characteristics measuring conditions	
Current (30-minutes Value)		See standard list		See characteristics measuring conditions	
Surge Voltage		Capacitance	More than 90 % of initial requirement	Conforms to 7.14 Surge voltage: 6.3 V Temperature: 70 ± 2˚C Charging for 30 seconds Discharging for 9 min. 30 sec. Number of cycles 1 000 cycles Charge resistance : 0.01 F 1500 Ω 0.47 F 30 Ω 0.022 F 560 Ω 1.0 F 15 Ω 0.047 F 300 Ω 1.4 F 15 Ω 0.10 F 150 Ω 2.2 F 10 Ω 0.22 F 56 Ω No discharge resistance	
		Equivalent Series Resistance	Less than 120% of initial requirement		
		Current at 30 minutes	Less than 120% of initial requirement		
		Appearance	No significant change		
Temperature Variation of Characteristics	Phase 2	Capacitance	More than 50 % of initial value	Conforms to 7.12 Phase 1: +25 ± 2˚C Phase 2: –25 ± 2˚C Phase 3: –40 ± 2˚C Phase 4: +25 ± 2˚C Phase 5: +70 ± 2˚C Phase 6: +25 ± 2˚C	
		Equivalent Series Resistance	Less than 400% of initial value		
	Phase 5	Capacitance	Less than 200% of initial value		
		Equivalent Series Resistance	Initial requirement		
		Current at 30 minutes	Less than 1.5 CV (mA)		
	Phase 6	Capacitance	Within ± 20% of initial value		
		Equivalent Series Resistance	Initial requirement		
		Current at 30 minutes	Initial requirement		
Lead Strength (Tensile)		No loosening nor permanent damage of the leads		Conforms to 8.1.2 (1) FYD0H105Z FYD0H145Z FYD0H225Z FYH0H474Z FYH0H105Z : 2.5 kg-f 10 ± 1 sec. Others: 1.0 kg-f 10 ± 1 sec.	
Vibration Resistance		Capacitance	Meet initial requirements	Conforms to 8.2.3 Frequency: 10 to 55 Hz Time of test: 6 hours	
		Equivalent Series Resistance			
		Current at 30 minutes			
		Appearance	No significant change		
Solderability		3/4 or more of the pin of surface should be covered with the solder		Conforms to 8.4 Temperature of solder: 230 ± 5˚C Time of immersion: 5 ± 0.5 second To immerse capacitors up to 1.6 mm from the bottom	
Soldering Heat Resistance		Capacitance	Meet initial requirements	Conforms to 8.5 Temperature of solder: 260 ± 10˚C Time of immersion: 10 ± 1 seconds To immerse capacitors up to 1.6 mm from the bottom	
		Equivalent Series Resistance			
		Current at 30 minutes			
		Appearance	No significant change		
Temperature Cycle		Capacitance	Shall meet initial requirements	Conforms to 9.3 Temperature condition: –25˚C → normal temperature → +70˚C → normal temperature Number of cycles: 5 cycles	
		Equivalent Series Resistance			
		Current at 30 minutes			
		Visual appearance	No significant change		
Humidity Resistance		Capacitance	Within ± 20% of initial value	Conforms to 9.5 Temperature: 40 ± 2˚C Humidity: 90 to 95% RH Time of test: 240 ± 8 hours	
		Equivalent Series Resistance	Less than 120% of initial requirement		
		Current at 30 minutes	Less than 120% of initial requirement		
		Appearance	No significant change		
High Temperature Load		Capacitance	Within ± 30% of initial value	Conforms to 9.10 Temperature: 70 ± 2˚C Series resistance: 0 Ω Applied voltage: 5.5 VDC Time of test: 1000^{+48}_{-0} hours	
		Equivalent Series Resistance	Less than 200% of initial requirement		
		Current at 30 minutes	Less than 200% of initial requirement		
		Appearance	No significant change		
Voltage Holding Characteristics (Self Discharge)		Voltage between terminal leads higher than 4.2 V.		Charging condition	Applied voltage: 5.0 VDC Series resistance: 0 Ω Curging time: 24 hours
				Storage	Load: Nothing Temperature: Lower than 25˚C Humidity: Lower than 70% RH Time: 24 hours

Measurement Conditions

(1) Capacitance (Charge System)

Capacitance is calculated from expression (9) by measuring the charge time constant (τ) of the capacitor (C). Prior to measurement, short between both pins of the capacitor for 30 minutes or more to let it discharge. In addition, follow the indication of the product when determining the polarity of the capacitor during charging.

$$\text{Capacitance: } C = \frac{\tau}{R_C} \text{ (F)} \qquad (9)$$

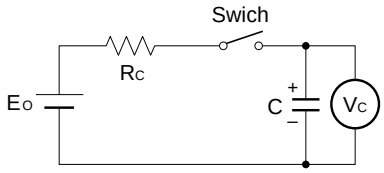

E_O: 3.0 (V) … Product with maximum operating voltage 3.5 V
5.0 (V) … Product with maximum operating voltage 5.5 V
6.0 (V) … Product with maximum operating voltage 6.5 V
10.0 (V) … Product with maximum operating voltage 11 V
12.0 (V) … Product with maximum operating voltage 12 V

τ: Time from start of charging until Vc becomes $0.632E_0$ (V) (sec)

R_C: See table below (Ω).

Series Name / Capacitance	FA	FE	FS	FY			FR	3.5 V, 6.5 V Operation Series	FM FME FMR	FMC	FG	FGH	FT	FC
				FYD	FYH	FYL								
0.010F	–	–	–	–	–	5000 Ω	–	0.022 F to 0.056 F 2000 Ω	5000 Ω	–	5000 Ω	–	–	–
0.022F	1000 Ω	–	1000 Ω	2000 Ω	2000 Ω	2000 Ω	2000 Ω		2000 Ω	–	2000 Ω	–	–	Discharge
0.047F	1000 Ω	1000 Ω	1000 Ω	2000 Ω	1000 Ω	2000 Ω	1000 Ω		2000 Ω	1000 Ω	2000 Ω	–	–	–
0.10F	510 Ω	510 Ω	510 Ω	1000 Ω	510 Ω	–	1000 Ω	–	1000 Ω	1000 Ω	1000 Ω	Discharge	510 Ω	Discharge
0.22F	200 Ω	200 Ω	–	510 Ω	510 Ω	–	510 Ω	–	1000 Ω	–	1000 Ω	Discharge	200 Ω	Discharge
0.33F	–	–	–	–	–	–	–	–	–	Discharge	–	–	–	–
0.47F	100 Ω	100 Ω	100 Ω	200 Ω	200 Ω	–	200 Ω	–	–	–	1000 Ω	Discharge	100 Ω	Discharge
1.0F	51 Ω	100 Ω	100 Ω	100 Ω	100 Ω	–	100 Ω	–	–	–	510 Ω	Discharge	100 Ω	Discharge
1.4F	–	–	–	200 Ω	–	–	–	–	–	–	–	–	–	–
1.5F	–	51 Ω	–	–	–	–	–	–	–	–	–	–	–	–
2.2F	–	–	–	100 Ω	–	–	–	–	–	–	200 Ω	–	51 Ω	–
3.3F	–	–	–	–	–	–	–	–	–	–	–	–	51 Ω	–
4.7F	–	–	–	51 Ω	–	–	–	–	–	–	100 Ω	–	–	–
5.0F	–	–	100 Ω	–	–	–	–	–	–	–	–	–	–	–
5.6F	–	–	–	–	–	–	–	–	–	–	–	–	20 Ω	–

*Capacitance values according to the constant current discharge method.

Table 3 Capacitance measurement

Capacitance (Discharge System)

In the diagram below, charging is performed for a duration of 30 minutes, once the voltage of the condensor terminal reaches 5.5 V.

Then, use a constant current load device and measure the time for the terminal voltage to drop from 3.0 to 2.5 V upon discharge at 0.22 mA for 0.22 F, for example, and calculate the static capacitance according to the equation shown below.

Note: The current value is 1 mA discharged per 1F.

$$\text{Capactance : } C = \frac{I \times (T_2 - T_1)}{V_1 - V_2} \text{ (F)}$$

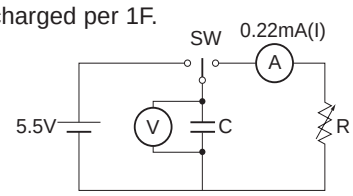

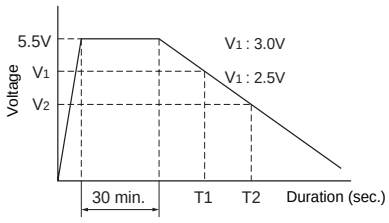

∗Difference owing to method of measuring capacitance

Measurement of the capacitance values by Super capacitors accords to the constant resistance charge method. If measured according to competitors' constant current, discharge and charge measurement methods, the specified current values are smaller than those specified by us and therefore they are apparently 1.3 to 1.5 times the capacitance values measured by our measurement method. Therefore, the backup capability of the same rated product as those of competitiors is 1.3 to 1.5 times that of competitors.

This catalog describes the constant resistance charge method and the constant current discharge method.

(2) Equivalent series resistance (ESR)

ESR is calculated from expression (10) by using a 1 kHz oscillator, applying an AC current of 10 mA and measuring the voltage (Vc) between both ends of the capaoitor.

Equivalent series resistance : $ESR = \frac{Vc}{10^{-2}}\ (\Omega)$ (10)

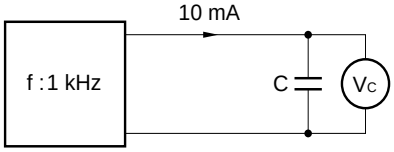

(3) Current (30-minute value)

The current value is calculated from expression (11) by applying a voltage to the capacitor (C), and measuring the voltage (V_R) between both ends of the series resistor (R_C) 30 minutes later. Prior to measurement, short between both pins of the capacitor for 30 minutes or more to let it discharge. Follow the indication of the product when determining the polarity of the capacitor during charging.

Current : $I = \frac{V_R}{R_C} \times 10^3$ (mA) (11)

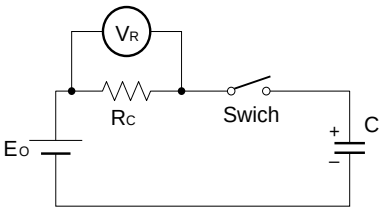

E_O: Conforms to E_O of capacitance measuring condition.

R_C: 0.01 to 0.056 F: 1 kΩ
- 0.1 to 0.47 F: 100 Ω
- 1 to 2.2 F: 10 Ω

FS Series 11 VDC, 12 Vdc products
- 0.47 F to 1.0 F: 100 Ω
- 5.0 F: 10 Ω

FG Series
- 1.0 F to 4.7 F: 100Ω

FT Series
- 1.0 F to 5.6 F: 10Ω

(4) Self-discharge characteristlic (except FA, FE, FS series, and 3.5 V and 6.5 V product)

The self-discharge characteristic is measured by charging a voltage of 5.0 VDC (charge protection resistance: 0 Ω) according to the capacitor polarity for 24 hours, then releasing between the pins for 24 hours and measuring the pin-to-pin voltage.

This test should be carried out in an environment with an ambient temperature of 25°C or below and relative humidity of 70% RH or below.

Notes on Using the Super Capacitor (Electric Double-Layer Capacitor)

This capacitor uses an electrolyte and a rubber-sealed structure. Using it at a high temperature for many hours may cause water content in the electrolyte to evaporate and increase equivalent series resistance.
The basic failure mode is an open mode caused by an increase of equivalent series resistance.

Failure rate

The failure rate calculated based on the field data is approximately 0.006 Fit.

Circuitry

a. Ensure that the maximum operating voltage and other rated values are selected reliably.
   Application of a voltage exceeding the maximum operating voltage may not only deteriorate performance but also damage the case, etc.
b. Since the equivalent series resistance (ESR) of the capacitor is relatively high, do not use it in a smoothing circuit such as a power supply circuit.
c. For reasons related to the marking display lamp, a sleeve is used for the capacitor, but its isolation is not guaranteed. Contact with adjacent components may cause leakage.
d. In the manufacturing process, the capacitor is processed with the pin on the case side designated as the (–) side. Note this (–) symbol when using the capacitor.
   A discharge may occur during shipment, but some residual potential may have an adverse effect on other components.
e. Use of a SuperCapacitor in the vicinity of a heating element (coil, power transistor, posistor, etc.) may heat the capacitor itself and considerably shorten its service life.
f. Avoid exposure to acidic or alkaliue liquids.

Mounting

a. This capacitor cannot be mounted with a reflow furnace such as IR and VPS. Avoid dipping the capacitor in a solder dip bath.
b. When using flow automatic soldering, ensure that the soldering temperature is 260˚C or below and soldering duration at one point does not exceed 10 sec.
c. For soldering with a soldering rod, select a soldering rod with a capacity of approximately 30 W and ensure that the temperature at the rod tip does not exceed 350˚C and that the soldering duration does not exceed 5 sec. The rod temperature should be controlled reliably. Heating pins excessively may increase the equivalent series resistance (ESR) of the capacitor.
d. Do not deform or file capacitor pins.
   Doing so may cause solder plating on the pin to fall off and prevent solder from sticking.
e. Avoid mechanical impacts such as dropping on the floor and touching with a hard blade, to prevent renting sleeves and pin wave.

Cleaning

a. Basically do not wash capacitors except the FM series. When washing is unavoidable, use a washing resistant product.
b. Drying after washing should be performed within the maximum operating temperature range.

Storage

a. Store the product in an environment with a normal temperature and normal humidity without condensation.
b. Avoid exposing the product in direct sunlight for many hours. (Doing so may cause deterioration or discoloration of the sleeve.)
c. Avoid storage in an acidic or alkaline atmosphere.

Taking the capacitors apart

a. The capacitors contains a trace of dilute sulfuric acid. Contact with hands, etc., may be harmful, so do not disassemble them.
b. Do not use incineration for disposal. Instead, dispose of them as industrial waste.

Environmental Impact Reduced Products

By changing the solder plating from leaded solder to lead-free solder, and the outer tube material of can-cased conventional SuperCapacitor from polyvinyl chloride to Polyethylene Terephathatate (PET), our new SuperCapacitor has now became even more friendlier to the environment.

Types of plating and outer tube

a. Iron + copper base + lead-free solder plating (Sn-1Cu)
b. SUS + copper base + reflow lead-free solder plating (100% Sn, reflow processed)

Series	Part Number	Plating	Outer Tube
FA	All FA Series	a	PET (Blue)
FE	All FE Series	a	PET (Blue)
FS	All FS Series	a	PET (Blue)
FR	All FR Series	a	PET (Blue)
FT	All FT Series	a	PET (Blue)
FY	All FYD type	a	PET (Blue)
	All FYH type	a	PET (Blue)
	FYL0H473Z	a	PET (Blue)
	FYL0H223Z	b	PET (Blue)
	FYL0H103Z	b	PET (Blue)
FG	FG0H103Z	b	PET (Blue)
	FG0H223Z	b	PET (Blue)
	FG0H104Z	b	PET (Blue)
	FG0H473Z	b	PET (Blue)
	FG0H474Z	a	PET (Blue)
	FG0H105Z	a	PET (Blue)
	FG0H225Z	a	PET (Blue)
	FG0H475Z	a	PET (Blue)
	FGH0H104Z	b	PET (Blue)
	FGH0H224Z	b	PET (Blue)
	FGH0H474Z	a	PET (Blue)
	FGH0H105Z	a	PET (Blue)
FM	All FM Series	a	No tube used
FC	FC0H473ZTBR24	b	No tube used
	FC0H104ZTBR24	b	No tube used
	FC0H224ZTBR24	b	No tube used
	FC0H474ZTBR32	a	No tube used
	FC0H105ZTBR44	a	No tube used
	FC0V104ZTBR24	b	No tube used
	FC0V224ZTBR24	b	No tube used
	FC0V474ZTBR24	b	No tube used
Others	FSH0H473Z	b	PET (Blue)
	FSH0V433Z	b	PET (Blue)
	FYD0V563Z	b	PET (Blue)
	FSH0J223Z	a	PET (Blue)
	FYD0J273Z	a	PET (Blue)

Recommended Pb-free solder : Sn / 3.5Ag / 0.75Cu
Sn / 3.0Ag / 0.5Cu
Sn / 0.7Cu
Sn / 2.5Ag / 1.0Bi / 0.5Cu

FC Series

Prot Number	Max. Rated Voltage (Vdc)	Nominal Capacitance Discharge sytem (F)	Max. ESR (at 1kHz) (Ω)	Max. current at 30 minutes (mA)	Min. Voltage Holding Characteristic (V)
FC0H473ZFTBR24	5.5	0.047	lesss than 50	lesss than 0.071	more than 4.2
FC0H104ZFTBR24	5.5	0.10	lesss than 25	lesss than 0.15	more than 4.2
FC0H224ZFTBR24	5.5	0.22	lesss than 25	lesss than 0.33	more than 4.2
FC0H474ZFTBR32	5.5	0.47	lesss than 13	lesss than 0.71	more than 4.2
FC0H105ZFTBR44	5.5	1.00	lesss than 7	lesss than 1.50	more than 4.2
FC0V104ZFTBR24	3.5	0.10	lesss than 50	lesss than 0.090	–
FC0V224ZFTBR24	3.5	0.22	lesss than 25	lesss than 0.20	–
FC0V474ZFTBR24	3.5	0.47	lesss than 25	lesss than 0.42	–

Same shape as
FC Series (See page 8.)

FC Series

Part Number	Max. Rated Voltage (V)	Nomial Capacitance Charge System (F)	Nomial Capacitance Discharge System (F)	Max. ESR (at 1 kHz) (Ω)	Max. Current at 30 minutes (mA)
FT0H104ZF	5.5	0.10	0.14	less than 16	less than 0.15
FT0H224ZF	5.5	0.22	0.28	less than 10	less than 0.33
FT0H474ZF	5.5	0.47	0.60	less than 6.5	less than 0.71
FT0H105ZF	5.5	1.0	1.3	less than 3.5	less than 1.5
FT0H225ZF	5.5	2.2	2.8	less than 1.8	less than 3.3
FT0H335ZF	5.5	3.3	4.2	less than 1.0	less than 5.0
FT0H565ZF	5.5	5.6	7.2	less than 0.6	less than 8.4

Same shape as
FT Series
(See page 13.)

FG Series

Part Number	Max. Rated Voltage (V)	Nomial Capacitance Charge System (F)	Nomial Capacitance Discharge System (F)	Max. ESR (at 1 kHz) (Ω)	Max. Current at 30 minutes (mA)	Voltage Holding Characteristic Min.(V)
FG0H103ZF	5.5	0.01	0.013	300	0.015	4.2
FG0H223ZF	5.5	0.022	0.028	200	0.033	4.2
FG0H473ZF	5.5	0.047	0.060	200	0.071	4.2
FG0H104ZF	5.5	0.10	0.13	100	0.15	4.2
FG0H224ZF	5.5	0.22	0.28	100	0.33	4.2
FG0H474ZF	5.5	0.47	0.60	120	0.71	4.2
FG0H105ZF	5.5	1.0	1.3	65	1.5	4.2
FG0H225ZF	5.5	2.2	2.8	35	3.3	4.2
FG0H475ZF	5.5	4.7	6.0	35	7.1	4.2

Part Number	Max. Rated Voltage (V)	Nomial Capacitance Charge System (F)	Nomial Capacitance Discharge System (F)	Max. ESR (at 1 kHz) (Ω)	Max. Current at 30 minutes (mA)	Voltage Holding Characteristic Min.(V)
FGH0H104ZF	5.5	–	0.10	100	0.15	4.2
FGH0H224ZF	5.5	–	0.22	100	0.33	4.2
FGH0H474ZF	5.5	–	0.47	65	0.71	4.2
FGH0H105ZF	5.5	–	1.0	35	1.5	4.2

Same shape as
FG Series
(See page 16., 18.)

FM Series

● 5.5 V Type

Part Number	Ammo pack	Max. Rated Voltage (VDC)	Nomial Capacitance Charge System (F)	Nomial Capacitance Discharge System (F)	Max. ESR (at 1 kHz) (Ω)	Max. Current at 30 minutes (mA)	Voltage Holding Characteristic min. (V)
FM0H103ZF	FM0H103ZFTP ( )	5.5	0.01	0.014	300	0.015	4.2
FM0H223ZF	FM0H223ZFTP ( )	5.5	0.022	0.028	200	0.033	4.2
FM0H473ZF	FM0H473ZFTP ( )	5.5	0.047	0.06	200	0.071	4.2
FM0H104ZF	FM0H104ZFTP ( )	5.5	0.10	0.13	100	0.15	4.2
FM0H224ZF	FM0H224ZFTP ( )	5.5	–	0.22	100	0.33	4.2

Same shape as FM Series 5.5V Type (See page 21.)

Note: To complete part number, insert lead length H. (16 or 18 mm: Refer to Taping Specification on page 30.)

● 3.5 V Type

Part Number	Ammo pack	Max. Rated Voltage (VDC)	Nominal Capacitance Charge System (F)	Nominal Capacitance Discharge System (F)	Max. ESR (at 1 kHz) (Ω)	Max. Current at 30 minutes (mA)
FM0V473ZF	FM0V473ZFTP ( )	3.5	0.047	0.06	200	0.042
FM0V104ZF	FM0V104ZFTP ( )	3.5	0.10	0.13	100	0.090
FM0V224ZF	FM0V224ZFTP ( )	3.5	0.22	0.30	100	0.20

Same shape as FM Series 3.5V Type (See page 22.)

Note: To complete part number, insert lead length H. (16 or 18 mm: Refer to Taping Specification on page 30.)

● FME Type (Backup Large Current , mA Order)

Part Number	Ammo pack	Max. Rated Voltage (VDC)	Nominal Capacitance Charge System (F)	Nominal Capacitance Discharge System (F)	Max. ESR (at 1 kHz) (Ω)	Max. Current at 30 minutes (mA)
FME0H223ZF	FME0H223ZFTP ( )	5.5	0.022	0.028	40	0.033
FME0H473ZF	FME0H473ZFTP ( )	5.5	0.047	0.06	20	0.071

Same shape as FM Series FME Type (See page 22.)

Note: To complete part number, insert lead length H. (16 or 18 mm: Refer to Taping Specification on page 30.)

● FMR Type (Extended Operating Temperature range)

Part Number	Ammo pack	Max. Rated Voltage (VDC)	Nominal Capacitance Charge System (F)	Nominal Capacitance Discharge System (F)	Max. ESR (at 1 kHz) (Ω)	Max. Current at 30 minutes (mA)	Voltage Holding Characteristic min.(V)
FMR0H473ZF	FMR0H473ZFTP ( )	5.5	0.047	0.062	200	0.071	4.2

Same shape as FM Series FMR Type (See page 22.)

Note: To complete part number, insert lead length H. (16 or 18 mm: Refer to Taping Specification on page 30.)

● FM 6.5V Type

Part Number	Ammo pack	Max. Rated Voltage (VDC)	Nominal Capacitance Charge System (F)	Nominal Capacitance Discharge System (F)	Max. ESR (at 1 kHz) (Ω)	Max. Current at 30 minutes (mA)
FM0J473ZF	FM0J473ZFTP ( )	6.5	0.047	0.062	200	0.071

Same shape as FM Series 6.5V Type (See page 22.)

Note: To complete part number, insert lead length H. (16 or 18 mm: Refer to Taping Specification on page 30.)

● FMC Type

Part Number	Ammo pack	Max. Rated Voltage (VDC)	Nomial Capacitance Charge System (F)	Nomial Capacitance Discharge System (F)	Max. ESR (at 1 kHz) (Ω)	Max. Current at 30 minutes (mA)	Voltage Holding Characteristic min. (V)
FMC0H473ZF	FMC0H473ZFTP( )	5.5	0.047	0.062	less than 100	less than 0.071	more than 4.2V
FMC0H104ZF	FMC0H104ZFTP( )	5.5	0.10	0.13	less than 50	less than 0.15	more than 4.2V
FMC0H334ZF	FMC0H334ZFTP( )	5.5	–	0.33	less than 30	less than 0.50	more than 4.2V

Chip parts applicable to treatment in bond hardening furnace (160 ± 5°C for 120 ±10 seconds)

Same shape as FM Series FMC Type (See page 28.)

FA Series

Part Number	Max. Rated Voltage (VDC)	Nominal Capacitance Charge System (F)	Nominal Capacitance Discharge System (F)	Max. Current at 30 minutes (mA)	Max. ESR (at 1 kHz) (Ω)
FA0H473ZF	5.5	0.047	0.075	0.071	20
FA0H104ZF	5.5	0.1	0.16	0.15	8
FA0H224ZF	5.5	0.22	0.35	0.33	5
FA0H474ZF	5.5	0.47	0.75	0.71	3.5
FA0H105ZF	5.5	1.0	1.6	1.5	2.5
FA1A223ZF	11	0.022	0.035	0.066	20
FA1A104ZF	11	0.1	0.16	0.33	8
FA1A224ZF	11	0.22	0.35	0.66	6
FA1A474ZF	11	0.47	0.75	1.41	4

Same shape as FA Series (See page 34.)

FE Series

Part Number	Max. Rated Voltage (V)	Nominal Capacitance Charge System (F)	Nominal Capacitance Discharge System (F)	Max. Current at 30 minutes (mA)	Max. ESR (at 1 kHz) (Ω)
FE0H473ZF	5.5	0.047	0.075	0.071	14.0
FE0H104ZF	5.5	0.10	0.16	0.15	6.5
FE0H224ZF	5.5	0.22	0.35	0.33	3.5
FE0H474ZF	5.5	0.47	0.75	0.71	1.8
FE0H105ZF	5.5	1.0	1.4	1.5	1.0
FE0H155ZF	5.5	1.5	2.1	2.3	0.6

Same shape as FE Series (See page 37.)

FS Series

Part Number	Max. Rated Voltage (V)	Nomial Capacitance		Max. ESR (at 1 kHz) (Ω)	Max. Current at 30 minutes (at 1 kHz) (mA)
		Charge System (F)	Discharge System (F)		
FS0H223ZF	5.5	0.022	0.033	60	0.033
FS0H473ZF	5.5	0.047	0.072	40	0.071
FS0H104ZF	5.5	0.10	0.15	25	0.15
FS0H224ZF	5.5	0.22	0.33	25	0.33
FS0H474ZF	5.5	0.47	0.75	13	0.71
FS0H105ZF	5.5	1.0	1.3	7	1.5
FS1A474ZF	11.0	0.47	0.60	7	1.41
FS1A105ZF	11.0	1.0	1.3	7	3.0
FS1B105ZF	12.0	1.0	1.3	7.5	3.6
FS1B505ZF	12.0	5.0	6.5	4.0	18.0

Same shape as FS Series (See page 40.)

FR Series

Part Number	Max. Rated Voltage (V)	Nomial Capacitance		Max. ESR (at 1 kHz) (Ω)	Max. Current at 30 minutes (mA)	Voltage Holding Characteristic Min. (V)
		Charge System (F)	Discharge System (F)			
FR0H223ZF	5.5	0.022	0.028	220	0.033	4.2
FR0H473ZF	5.5	0.047	0.060	110	0.071	4.2
FR0H104ZF	5.5	0.10	0.15	150	0.15	4.2
FR0H224ZF	5.5	0.22	0.33	180	0.33	4.2
FR0H474ZF	5.5	0.47	0.75	100	0.71	4.2
FR0H105ZF	5.5	1.0	1.6	60	1.5	4.2

Same shape as FR Series (See page 43.)

3.5 V, 6.5 V Rated Voltage Series

Part Number	Max. Rated Voltage (V)	Nomial Capacitance		Max. ESR (at 1 kHz) (Ω)	Max. Current at 30 minutes (mA)
		Charge System (F)	Discharge System (F)		
FSH0V433ZF	3.5	0.043	0.055	50	0.039
FYD0V563ZF	3.5	0.056	0.070	150	0.050
FSH0J223ZF	6.5	0.022	0.033	60	0.040
FYD0J273ZF	6.5	0.027	0.040	200	0.049

Same shape as 3.5V, 6.5V Rated Voltage Series (See page 47.)

FY Series

● FYD-Type

Part Number	Max. Rated Voltage (V)	Nomial Capacitance Charge System (F)	Nomial Capacitance Discharge System (F)	Max. ESR (at 1 kHz) (Ω)	Max. Current at 30 minutes (mA)	Voltage Holding Characteristic Min. (V)
FYD0H223ZF	5.5	0.022	0.033	220	0.033	4.2
FYD0H473ZF	5.5	0.047	0.070	220	0.071	4.2
FYD0H104ZF	5.5	0.10	0.14	100	0.15	4.2
FYD0H224ZF	5.5	0.22	0.35	120	0.33	4.2
FYD0H474ZF	5.5	0.47	0.75	65	0.71	4.2
FYD0H105ZF	5.5	1.0	1.6	35	1.5	4.2
FYD0H145ZF	5.5	1.4	2.1	45	2.1	4.2
FYD0H225ZF	5.5	2.2	3.3	35	3.3	4.2

Same shape as FY Series FYD Type (See page 50.)

● FYH-Type

Part Number	Max. Rated Voltage (V)	Nomial Capacitance Charge System (F)	Nomial Capacitance Discharge System (F)	Max. ESR (at 1 kHz) (Ω)	Max. Current at 30 minutes (mA)	Voltage Holding Characteristic Min. (V)
FYH0H223ZF	5.5	0.022	0.033	200	0.033	4.2
FYH0H473ZF	5.5	0.047	0.075	100	0.071	4.2
FYH0H104ZF	5.5	0.10	0.16	50	0.15	4.2
FYH0H224ZF	5.5	0.22	0.30	60	0.33	4.2
FYH0H474ZF	5.5	0.47	0.70	35	0.71	4.2
FYH0H105ZF	5.5	1.0	0.50	20	1.5	4.2

Same shape as FY Series FYH Type (See page 51.)

● FYL-Type

Part Number	Max. Rated Voltage (V)	Nomial Capacitance Charge System (F)	Nomial Capacitance Discharge System (F)	Max. ESR (at 1 kHz) (Ω)	Max. Current at 30 minutes (mA)	Voltage Holding Characteristic Min. (V)
FYL0H103ZF	5.5	0.010	0.013	300	0.015	4.2
FYL0H223ZF	5.5	0.022	0.028	200	0.033	4.2
FYL0H473ZF	5.5	0.047	0.061	200	0.071	4.2

Same shape as FY Series FYL Type (See page 52.)

Environmental Impact Reduced Products Specifications

FS Series 5.5V Type

Item		Standard		Test Conditions conforming to JIS C 5102-1994
Operating Temperature Range		–25°C to +70˚C		
Maximum Operating Voltage		5.5 VDC		
Nominal Capacitance Range		0.047 to 1.0F		See characteristics measuring method.
Capacitance Allowance		+80%, –20%		See characteristics measuring method.
Equivalent Series Resistance		See standard list		See characteristics measuring method.
Current (30-minutes value)		See standard list		See characteristics measuring method.
*Surge Voltage20		Capacitance	More than 90% of initial requirement	Conforms to 7.14 Surge Voltage: 6.3 V(5.5V products) Temperature: 70 ± 2˚C Charge: 30 sec. Discharge: 9 min. 30 sec. Number of cycles 1000 cycles. Charge resistance: 0.047F 300 Ω Discharge resistance: 0 Ω
		Equivalent series resistance	Not to exceed 120% of initial requirement	
		Current (30-minute value)	Not to exceed 120% of initial requirement	
		Appearance	No obvious abnormality	
*Temperature Variation of Characteristics	Phase 2	Capacitance	50% or higher of initial value	Conforms to 7.12 Phase 1: +25 ± 2°C Phase 2: –25 ± 2°C Phase 3: –40 ± 2°C Phase 4: +25 ± 2°C Phase 5: +70 ± 2°C Phase 6: +25 ± 2°C
		Equivalent series resistance	4 or less times initial value	
	Phase 5	Capacitance	200% or below of initial value	
		Equivalent series resistance	Satisty initial standard value	
		Current (30-minute value)	1.5 CV (mA) or below	
	Phase 6	Capacitance	Within ±20% of initial value	
		Equivalent series resistance	Satisty initial standard value	
		Current (30-minute value)	Satisty initial standard value	
*Vibration Resistance		Capacitance	Satisty initial standard value	Conforms to 8.2.3 Frequency : 10 to 55 Hz Test duration : 6 hours
		Equivalent series resistance		
		Current (30-minute value)		
		Appearance	No obvious abnormality	
*Soldering Heat Resistance		Capacitance	Satisty initial standard value	Conforms to 8.5 Solder temperature: 260 ± 10°C Dipping duration: 10 ± 1 sec. Dipped up to 1.6 mm from the lower end of the capacitor.
		Equivalent series resistance		
		Current (30-minute value)		
		Appearance	No obvious able abnormality	
*Temperature Cycle		Capacitance	Satisty initial standard value	Conforms to 9.3 Temperature condition: –25°C → normal temperature → +70°C → normal temperature Number of cycles: 5 cycles
		Equivalent series resistance		
		Current (30-minute value)		
		Appearance	No obvious abnormality	
*Humidity Resistance		Capacitance	Within 20% of initial value	Conforms to 9.5 Temperature: 40 ± 2°C Relative humidity: 90 to 95% RH Test duration: 240 ± 8 hours
		Equivalent series resistance	1.2 or less times initial standard value	
		Current (30-minute value)	1.2 or less times initial standard value	
		Appearance	No obuious abnormality	
*High Temperature Load		Capacitance	Within 30% of initial value	Conforms to 9.10 Temperature: 70 ± 2°C Voltage applied: 5.5 Vdc Series protection resistance: 0 Ω Test duration: 1000^{+48}_{0} hours
		Equivalent series resistance	Twice or less times initial standard value	
		Current (30-minute value)	Twice or less times initial standard value	
		Appearance	No obvious abnormality	
*Voltage Holding Characteristics (Self Dischage)		Voltage between terminal leads higher than 4.2 V		Charging condition: Voltage applied: 5.0 VDC Series resistance: 0 Ω Charging time: 24hours Storage: Time: 24hours Temperature:Lower than 25°C

* The characteristics above must be satisfied for asterisked items after the end of reflow soldering (according to the reflow condition shown on page).

FC Series 3.5V Type

Item		Standard		Test Conditions Conforming to JIS C 5102-1994
Operating Temperature Range		–25°C to +70˚C		
Maximum Operating Voltage		3.5 VDC		
Nominal Capacitance Range		0.010 to 0.47F		See characteristics measuring method.
Capacitance Allowance		+80%, –20%		See characteristics measuring method.
Equivalent Series Resistance		See standard list		See characteristics measuring method.
Current (30-minutes value)		See standard list		See characteristics measuring method.
*Surge Voltage		Capacitance	More than 90% of initial requirement	Conforms to 7.14 Surge Voltage: 4.0 V(3.5V products) Temperature: 70 ± 2˚C Charge: 30 sec. Discharge: 9 min. 30 sec. Number of cycles 1000 cycles. Charge resistance : 0.10F 150 Ω : 0.22F 56 Ω : 0.47F 30 Ω : 1.0F 15 Ω Discharge resistance: 0 Ω
		Equivalent series resistance	Not to exceed 120% of initial requirement	
		Current (30-minute value)	Not to exceed 120% of initial requirement	
		Appearance	No obvious abnormality	
*Temperature Variation of Characteristics	Phase 2	Capacitance	50% or higher of initial value	Conforms to 7.12 Phase 1: +25 ± 2°C Phase 2: –25 ± 2°C Phase 3: –40 ± 2°C Phase 4: +25 ± 2°C Phase 5: +70 ± 2°C Phase 6: +25 ± 2°C
		Equivalent series resistance	4 or less times initial value	
	Phase 5	Capacitance	200% or below of initial value	
		Equivalent series resistance	Satisty initial standard value	
		Current (30-minute value)	1.5 CV (mA) or below	
	Phase 6	Capacitance	Within ±20% of initial value	
		Equivalent series resistance	Satisty initial standard value	
		Current (30-minute value)	Satisty initial standard value	
*Vibration Resistance		Capacitance	Satisty initial standard value	Conforms to 8.2.3 Frequency : 10 to 55 Hz Test duration : 6 hours
		Equivalent series resistance		
		Current (30-minute value)		
		Appearance	No obvious abnormality	
*Soldering Heat Resistance		Capacitance	Satisty initial standard value	Conforms to 8.5 Solder temperature: 260 ± 10°C Dipping duration: 10 ± 1 sec. Dipped up to 1.6 mm from the lower end of the capacitor.
		Equivalent series resistance		
		Current (30-minute value)		
		Appearance	No obvious able abnormality	
*Temperature Cycle		Capacitance	Satisty initial standard value	Conforms to 9.3 Temperature condition: –25°C → normal temperature → +70°C → normal temperature Number of cycles: 5 cycles
		Equivalent series resistance		
		Current (30-minute value)		
		Appearance	No obvious abnormality	
*Humidity Resistance		Capacitance	Within 20% of initial value	Conforms to 9.5 Temperature: 40 ± 2°C Relative humidity: 90 to 95% RH Test duration: 240 ± 8 hours
		Equivalent series resistance	1.2 or less times initial standard value	
		Current (30-minute value)	1.2 or less times initial standard value	
		Appearance	No obuious abnormality	
*High Temperature Load		Capacitance	Within 30% of initial value	Conforms to 9.10 Temperature: 70 ± 2°C Voltage applied: 3.5 Vdc Series protection resistance: 0 Ω Test duration: 1000^{+48}_{0} hours
		Equivalent series resistance	Twice or less times initial standard value	
		Current (30-minute value)	Twice or less times initial standard value	
		Appearance	No obvious abnormality	

* The characteristics above must be satisfied for asterisked items after the end of reflow soldering (according to the reflow condition shown on page).

FT Series

Item		Specification		Test Conditions Conforming to JIS C 5102-1994
Operating Temperature Range		–40˚C to +85˚C		
Maximum Operating Voltage		5.5 Vdc		
Nominal Capacitance Range		0.1 to 5.6 F (Refer to standard ratings)		
Capacitance Allowance		+80 %, –20 %		See characteristics measuring conditions
Equivalent Series Resistance		See standard list		See characteristics measuring conditions
Current (30-minute value)		See standard list		See characteristics measuring conditions
Surge Voltage		Capacitance	More than 90 % of initial requirement	Conforms to 7.14 At 85˚C Surge voltage 6.3 V Charge: 30 sec. Discharge: 9 min. 30 sec. 1000 cycles Charge resistance: 0.10 F 150 Ω 0.22 F 56 Ω 0.47 F 30 Ω 1.0 F 15 Ω 2.2 F 10 Ω 3.3 F 10 Ω 5.6 F 10 Ω Discharge resistance: Not applicable (0 Ω)
		Equivalent Series Resistance	Not to exceed 120 % of initial requirement	
		Current at 30 minutes	Not to exceed 120 % of initial requirement	
Temperature Variation of Characteristics	Phase 2	Capacitance	More than 50 % of initial value	Conforms to 7.12 Phase 1: +25±2˚C Phase 2: –25±2˚C Phase 3: –40±2˚C Phase 4: +25±2˚C Phase 5: +85±2˚C Phase 6: +25±2˚C
		Equivalent Series Resistance	Not to exceed 3 times initial value	
	Phase 3	Capacitance	More than 30 % of initial value	
		Equivalent Series Resistance	Not to exceed 7 times initial value	
	Phase 5	Capacitance	Not to exceed 150 % of initial value	
		Equivalent Series Resistance	Not to exceed initial requirement	
		Current at 30 minutes	Not to exceed 1.5 CV (mA)	
	Phase 6	ΔC/C	Within ±20 % of initial value	
		Equivalent Series Resistance	Not to exceed initial requirement	
		Current at 30 minutes	Not to exceed initial requirement	
Lead Strength (Tensile)		No loosening nor permanent damage of the leads		Conforms to 8.1.2(1) 0.022 to 0.47 F: 1 kg, 10 sec. 1 F: 2.5 kg, 10 sec.
Vibration Resistance		Capacitance	Meet initial requirement	Conforms to 8.2.3 Frequency: 10 to 55 Hz Test duration: 6 hours
		Equivalent Series Resistance	Meet initial requirement	
		Current at 30 minutes	Meet initial requirement	
Solderability		3/4 or more of the pin surface should be covered with new solder		Conforms to 8.4 245 ± 5˚C 5 ± 0.5 sec. 1.6 mm from body
Soldering Heat Resistance		Capacitance	Meet initial requirement	Conforms to 8.5 260 ±10˚C, 10 ±1 sec. Immersion depth: 1.6 mm from body
		Equivalent Series Resistance	Meet initial requirement	
		Current at 30 minutes	Meet initial requirement	
Temperature Cycle		Capacitance	Meet initial requirement	Conforms to 9.3 Temperatuve condition: –40˚C → Normai temperature → +85˚C→ Normai temperature Number of cycles : 5 cycles
		Equivalent Series Resistance	Meet initial requirement	
		Current at 30 minutes	Meet initial requirement	
Humidity Resistance		Capacitance	Within ± 20% of initial value	Conforms to 9.5 40 ± 2˚C, 90 to 95% RH 240 ± 8 hours
		Equivalent Series Resistance	Not to exceed120 % of initial requirement	
		Current at 30 minutes	Not to exceed120 % of initial requirement	
High temperature Load		Capacitance change	Within ±30% of initial value	Conforms to 9.10 Temperature: 85 ± 2°C Series resistance: 0 Ω Applied voltage: 5.5 VDC Time of test: 1000^{+48}_{-0} hours
		Equivalent Series Resistance	Not to exceed 200% of initial requirement	
		Current at 30 minutes	Not to exceed 200% of initial requirement	

FG Series

Items		Standard		Test Conditions Conforming to JIS C 5102-1994
Operating Temperature Range		–25˚C to +70˚C		
Maximum Operating Voltage.		5.5 Vdc		
Nominal Capacitance Range		0.010 to 4.7 F		See characteristics measuring method
Capacitance Allowance		+80 %, –20 %		See characteristics measuring method
Equivalent Series Resistance		See standard list		See characteristics measuring method
Current (30-minute value)		See standard list		See characteristics measuring method
Surge Voltage		Capacitance	More than 90% of initial requirement	Conforms to 7.14 Surge voltage: 6.3V Temperature: 70±2˚C Charge: 30 sec. Discharge: 9 min 30 sec. Number of cycles: 1000 cycles Series resistance: 0.010F: 1500 Ω 0.47F: 30 Ω 0.022F: 560 Ω 1.0F: 15 Ω 0.047F: 300 Ω 2.2F: 10 Ω 0.10F: 150 Ω 4.7F: 10 Ω 0.22F: 56 Ω Discharge resistance: 0 Ω
		Equivalent series resistance	Not to exceed 120% of initial requirement	
		Current at 30 min.	Not to exceed 120% of initial requirement	
		Appearance	No obvious abnormality	
Temperature Variation of Characteristics	Phase 2	Capacitance	50% or higher of initial value	Conforms to 7.12 Phase 1: +25±2˚C Phase 2: –25±2˚C Phase 3: –40±2˚C Phase 4: +25±2˚C Phase 5: +70±2˚C Phase 6: +25±2˚C
		Equivalent series resistance	4 or less times initial value	
	Phase 5	Capacitance	200% or below of initial value	
		Equivalent series resistance	Satisfy initial standard value	
		Current at 30 min.	1.5 CV (mA) or below	
	Phase 6	Capacitance	Within ±20% of initial value	
		Equivalent series resistance	Satisfy initial standard value	
		Current at 30 min.	Satisfy initial standard value	
Lead Strength (Tensile)		No loosening nor permanent damage of the leads		Conforms to 8.1.2 (1)
Vibration Resistance		Capacitance	Meet initial standard value	Conforms to 8.2.3 (1) Frequency: 10 to 55 Hz Test duration: 6 hours
		Equivalent series resistance		
		Current at 30 min.		
		Appearance	No obvious abnormality	
Solderability		3 / 4 or more of the pin surface should be covered with new solder		Conforms to 8.4 Solder temperature: 245±5˚C Dipping duration: 5±0.5 sec. Should be dipped up to 1.6mm from the lower end of the capacitor
Soldering Heat Resistance		Capacitance	Should satisfy initial standard value	Conforms to 8.5 Solder temperature: 260±10˚C Dipping duration: 10±1 sec. Should be dipped up to 1.6mm from the lower end of the capacitor
		Equivalent series resistance		
		Current at 30 min.		
		Appearance	No obvious abnormality	
Temperature Cycle		Capacitance	Satisfy initial standard value	Conforms to 9.3 Temperature: –25˚C → normal temperature → +70˚C → normal temperature Number of cycles: 5 cycles
		Equivalent series resistance		
		Current at 30 min.		
		Appearance	No obvious abnormality	
Humidity Resistance		Capacitance	Within ±20% of initial value	Conforms to 9.5 Temperature: 40±2˚C Relative humidity: 90 to 95% RH Test duration: 240 ±8hours
		Equivalent series resistance	1.2 or less times initial standard value	
		Current at 30 min.	1.2 or less times initial standard value	
		Appearance	No obvious abnormality	
High Temperature Load		Capacitance	Within ±30% of initial value	Conforms to 9.10 Temperature: 70±2˚C Voltage applied: 5.5Vdc Series protection resistance: 0Ω Test duration: 1000^{+48}_{-0} hours
		Equivalent series resistance	Twice or less times initial standard value	
		Current at 30 min.	Twice or less times initial standard value	
		Appearance	No obvious abnormality	
Voltage Holding Characteristics (Self Discharge)		Voltage between terminal leads higher than 4.2V		Charging Condition: Voltage applied: 5.0VDC (with case side terminal negative) Series resistance: 0Ω Charging time: 24 hours
				Storage: Time: 24 hours Temperature: Lower than 25˚C Humidity: Lower than 70%RH

FG Series FGH Type

Items		Standard		Test Conditions Conforming to JIS C 5102-1994
Operating Temperature Range		–25˚C to +70˚C		
Maximum Operating Voltage.		5.5 Vdc		
Nominal Capacitance Range		0.10 to 1.0 F		See characteristics measuring method
Capacitance Allowance		+80 %, –20 %		See characteristics measuring method
Equivalent Series Resistance		See standard list		See characteristics measuring method
Current (30-minute value)		See standard list		See characteristics measuring method
Surge Voltage		Capacitance	More than 90% of initial requirement	Conforms to 7.14 Surge voltage: 6.3V Temperature: 70±2˚C Charge: 30 sec. Discharge: 9 min 30 sec. Number of cycles: 1000 cycles Series resistance: 0.010F: 1500 Ω 0.47F: 30 Ω 0.022F: 560 Ω 1.0F: 15 Ω 0.047F: 300 Ω 2.2F: 10 Ω 0.10F: 150 Ω 4.7F: 10 Ω 0.22F: 56 Ω Discharge resistance: 0 Ω
		Equivalent series resistance	Not to exceed 120% of inital requirement	
		Current at 30 min.	Not to exceed 120% of inital requirement	
		Appearance	No obvious abnormality	
Temperature Variation of Characteristics	Phase 2	Capacitance	50% or higher of initial value	Conforms to 7.12 Phase 1: +25 ±2˚C Phase 2: –25 ±2˚C Phase 3: –40 ±2˚C Phase 4: +25 ±2˚C Phase 5: +70 ±2˚C Phase 6: +25 ±2˚C
		Equivalent series resistance	4 or less times initial value	
	Phase 5	Capacitance	200% or below of initial value	
		Equivalent series resistance	Satisfy initial standard value	
		Current at 30 min.	1.5 CV (mA) or below	
	Phase 6	Capacitance	Within ±20% of initial value	
		Equivalent series resistance	Satisfy initial standard value	
		Current at 30 min.	Satisfy initial standard value	
Lead Strength (Tensile)		No loosening nor permanent damage of the leads		Conforms to 8.1.2 (1)
Vibration Resistance		Capacitance	Meet initial standard value	Conforms to 8.2.3 Frequency: 10 to 55 Hz Test duration: 6 hours
		Equivalent series resistance		
		Current at 30 min.		
		Appearance	No obvious abnormality	
Solderability		3 / 4 or more of the pin surface should be covered with new solder		Conforms to 8.4 Solder temperature: 245±5˚C Dipping duration: 5±0.5 sec. Should be dipped up to 1.6mm from the lower end of the capacitor
Solder Heat Resistance		Capacitance	Should satisfy initial standard value	Conforms to 8.5 Solder temperature: 260±10˚C Dipping duration: 10±1 sec. Should be dipped up to 1.6mm from the lower end of the capacitor
		Equivalent series resistance		
		Current at 30 min.		
		Appearance	No obvious abnormality	
Temperature Cycle		Capacitance	Satisfy initial standard value	Conforms to 9.3 Temperature: –25˚C → normal temperature → +70˚C → normal temperature Number of cycles: 5 cycles
		Equivalent series resistance		
		Current at 30 min.		
		Appearance	No obvious abnormality	
Humidity Resistance		Capacitance	Within ±20% of initial value	Conforms to 9.5 Temperature: 40±2˚C Relative humidity: 90 to 95% RH Test duration: 240 ±8hours
		Equivalent series resistance	1.2 or less times initial standard value	
		Current at 30 min.	1.2 or less times initial standard value	
		Appearance	No obvious abnormality	
High Temperature Load		Capacitance	Within ±30% of initial value	Conforms to 9.10 Temperature: 70±2˚C Voltage applied: 5.5Vdc Series protection resistance: 0Ω Test duration: 1000^{+48}_{-0} hours
		Equivalent series resistance	Twice or less times initial standard value	
		Current at 30 min.	Twice or less times initial standard value	
		Appearance	No obvious abnormality	
Voltage Holding Characteristics (Self Discharge)		Voltage between terminal leads higher than 4.2V		Charging Condition: Voltage applied: 5.0VDC (with case side terminal negative) Series resistance: 0Ω Charging time: 24 hours Storage: Time: 24 hours Temperature: Lower than 25˚C Humidity: Lower than 70%RH

FM Series 5.5V Type

Item		Standard		Test Conditions Conforming to JIS C 5102-1994
Operating Temperature Range		–25°C to +70°C		
Maximum Operating Voltage		5.5 VDC		
Nominal Capacitance Range		See standard list		
Capacitance Allowance		+80%, –20%		See characteristics measuring method.
Equivalent Series Resistance		See standard list		See characteristics measuring method.
Current (30-minutes value)		See standard list		See characteristics measuring method.
Surge Voltage		Capacitance	More than 90% of initial requirement	Conforms to 7.14 Surge Voltage: 6.3 V Temperature: 70 ± 2°C Charge: 30 sec. Discharge: 9 min. 30 sec. Number of cycles 1000 cycles. Series resistance: 0.01F: 1500 Ω 0.22F: 56 Ω 0.022 F: 560 Ω 0.047 F: 300 Ω 0.10 F: 150 Ω Discharge resistance: 0 Ω
		Equivalent series resistance	Not to exceed 120% of initial requirement	
		Current (30-minute value)	Not to exceed 120% of initial requirement	
		Appearance	No obvious abnormality.	
Temperature Variation of Characteristics	Phase 2	Capacitance	50% or higher of initial value	Conforms to 7.12 Phase 1: +25 ± 2°C Phase 2: –25 ± 2°C Phase 3: –40 ± 2°C Phase 4: +25 ± 2°C Phase 5: +70 ± 2°C Phase 6: +25 ± 2°C
		Equivalent series resistance	4 or less times initial value	
	Phase 5	Capacitance	200% or below of initial value	
		Equivalent series resistance	Satisty initial standard value	
		Current (30-minute value)	1.5 CV (mA) or below	
	Phase 6	Capacitance	Within ±20% of initial value	
		Equivalent series resistance	Satisty initial standard value	
		Current (30-minute value)	Satisty initial standard value	
Lead Strengh (Tensile)		No loosening nor permanent damage of the leads		Conforms to 8.1.2 (1) 1 kg 10sec.
Vibration Resistance		Capacitance	Satisty initial standard value	Conforms to 8.2.3 Frequency : 10 to 55 Hz Test duration : 6 hours
		Equivalent series resistance		
		Current (30-minute value)		
		Appearance	No obvious abnormality	
Solderability		3/4 or more of the pin surface should be covered with new solder		Conforms to 8.4 Solder temperature: 245 ± 5°C Dipping duration: 5 ± 0.5 sec. Dipped up to 1.6 mm from the lower end of the capacitor.
Soldering Heat Resistance		Capacitance	Satisty initial standard value	Conforms to 8.5 Solder temperature: 260 ± 10°C Dipping duration: 10 ± 1 sec. Dipped up to 1.6 mm from the lower end of the capacitor.
		Equivalent series resistance		
		Current (30-minute value)		
		Appearance	No obvious able abnormality	
Temperature Cycle		Capacitance	Satisty initial standard value	Conforms to 9.3 Temperature condition: –25°C → normal temperature → +70°C → normal temperature Number of cycles: 5 cycles
		Equivalent series resistance		
		Current (30-minute value)		
		Appearance	No obvious abnormality	
Humidity Resistance		Capacitance	Within 20% of initial value	Conforms to 9.5 Temperature: 40 ± 2°C Relative humidity: 90 to 95% RH Test duration: 240 ± 8 hours
		Equivalent series resistance	1.2 or less times initial standard value	
		Current (30-minute value)	1.2 or less times initial standard value	
		Appearance	No obuious abnormality	
High Temperature Load		Capacitance	Within 30% of initial value	Conforms to 9.10 Temperature: 70 ± 2°C Voltage applied: 5.5 Vdc Series protection resistance: 0 Ω Test duration: 1000^{+48}_{0} hours
		Equivalent series resistance	Twice or less times initial standard value	
		Current (30-minute value)	Twice or less times initial standard value	
		Appearance	No obvious abnormality	
Voltage Holding Characteristics (Self Discharge)		Voltage between terminal leads higher than 4.2 V		Charging condition: Voltage applied: 5.0 VDC Series resistance: 0 Ω Charging time: 24hours Storage: Time: 24hours Temperature:Lower than 25°C Humidity:Lower than 70%RH

FM Series 3.5V Type

Item		Standard		Test Conditions Conforming to JIS C 5102-1994
Operating Temperature Range		–25°C to +70°C		
Maximum Operating Voltage		3.5 VDC		
Nominal Capacitance Range		See standard list		
Capacitance Allowance		+80%, –20%		See characteristics measuring method.
Equivalent Series Resistance		See standard list		See characteristics measuring method.
Current (30-minutes value)		See standard list		See characteristics measuring method.
Surge Voltage		Capacitance	More than 90% of initial requirement	Conforms to 7.14 Surge voltage: 4.0 V Temperature: 70 ± 2°C Charge: 30 sec. Discharge: 9 min. 30 sec. Number of cycles 1000 cycles. Series resistance: 0.047 F: 300 Ω 0.10 F: 150 Ω 0.22 F: 56 Ω Discharge resistance: 0 Ω
		Equivalent series resistance	Not to exceed 120% of initial requirement	
		Current (30-minute value)	Not to exceed 120% of initial requirement	
		Appearance	No obvious abnormality	
Temperature Variation of Characteristics	Phase 2	Capacitance	50% or higher of initial value	Conforms to 7.12 Phase 1: +25 ± 2°C Phase 2: –25 ± 2°C Phase 3: –40 ± 2°C Phase 4: +25 ± 2°C Phase 5: +70 ± 2°C Phase 6: +25 ± 2°C
		Equivalent series resistance	4 or less times initial value	
	Phase 5	Capacitance	200% or below of initial value	
		Equivalent series resistance	Satisty initial standard value	
		Current (30-minute value)	1.5 CV (mA) or below	
	Phase 6	Capacitance	Within ±20% of initial value	
		Equivalent series resistance	Satisty initial standard value	
		Current (30-minute value)	Satisty initial standard value	
Lead Strengh (Tensile)		No loosening nor permanent damage of the leads		Conforms to 8.1.2 (1) 1 kg 10 sec
Vibration Resistance		Capacitance	Satisty initial standard value	Conforms to 8.2.3 Frequency: 10 to 55 Hz Test duration: 6 hours
		Equivalent series resistance		
		Current (30-minute value)		
		Appearance	No considerable abnormality	
Solderability		3/4 or more of the pin surface should be covered with new solder		Conforms to 8.4 Solder temperature: 245 ± 5°C Dipping duration: 5 ± 0.5 sec. Dipped up to 1.6 mm from for the lower end of the capacitor.
Soldering Heat Resistance		Capacitance	Satisty initial standard value	Conforms to 8.5 Solder temperature: 260 ± 10°C Dipping duration: 10 ± 1 sec. Dipped up to 1.6 mm from for the lower end of the capacitor.
		Equivalent series resistance		
		Current (30-minute value)		
		Appearance	No obvious abnormality	
Temperature Cycle		Capacitance	Satisty initial standard value	Conforms to 9.3 Temperature condition: –25°C → normal temperature → +70°C → normal temperature Number of cycles: 5 cycles
		Equivalent series resistance		
		Current (30-minute value)		
		Appearance	No obvious abnormality	
Humidity Resistance		Capacitance	Within ±20% of initial value	Conforms to 9.5 Temperature: 40 ± 2°C Relative humidity: 90 to 95% RH Test duration: 240 ± 8 hours
		Equivalent series resistance	1.2 or less times initial standard value	
		Current (30-minute value)	1.2 or less times initial standard value	
		Appearance	No obvious abnormality	
High Temperature Load		Capacitance	Within 30% of initial value	Conforms to 9.10 Temperature: 70 ± 2°C Voltage applied: 3.5 Vdc Series protection resistance: 0 Ω Test duration: 1000^{+48}_{0} hours
		Equivalent series resistance	Twice or less times initial standard value	
		Current (30-minute value)	Twice or less times initial standard value	
		Appearance	No obvious abnormality	

FM Series FME Type

Item		Standard		Test Conditions Conforming JIS C 5102-1994
Operating Temperature Range		–25°C to +70°C		
Maximum Operating Voltage		5.5 VDC		
Nominal Capacitance Range		See standard list		
Capacitance Allowance		+80%, –20%		See characteristics measuring method.
Equivalent Series Resistance		See standard list		See characteristics measuring method.
Current (30-minutes value)		See standard list		See characteristics measuring method.
Surge Voltage		Capacitance	More than 90% of initial requirement	Conforms to 7.14 Surge Voltage: 7.4 V Temperature: 70 ± 2°C Chargs: 30 sec. Dischargs: 9 min. 30 sec. Number of cycles 1000 cycles. Series resistance: 0.022 F: 560 Ω 0.047 F: 300 Ω Discharge resistance: 0 Ω
		Equivalent series resistance	Not to exceed 120% of initial requirement	
		Current (30-minute value)	Not to exceed 120% of initial requirement	
		Appearance	No obvious abnormality	
Temperature Variation of Characteristics	Phase 2	Capacitance	50% or higher of initial value	Conforms to 7.12 Phase 1: +25 ± 2°C Phase 2: –25 ± 2°C Phase 3: –40 ± 2°C Phase 4: +25 ± 2°C Phase 5: +70 ± 2°C Phase 6: +25 ± 2°C
		Equivalent series resistance	3 or less times initial value	
	Phase 5	Capacitance	150% or below of initial value	
		Equivalent series resistance	Satisty initial standard value	
		Current (30-minute value)	1.5 CV (mA) or below	
	Phase 6	Capacitance	Within ±20% of initial value	
		Equivalent series resistance	Satisty initial standard value	
		Current (30-minute value)	Satisty initial standard value	
Lead Strengh (Tensile)		No loosening nor permanent damage of the leads		Conforms to 8.1.2 (1) 1 kg 10 sec
Vibration Resistance		Capacitance	Should satisty initial standard value	Conforms to 8.2.3 Frequency: 10 to 55 Hz Test duration: 6 hours
		Equivalent series resistance		
		Current (30-minute value)		
		Appearance	There should be no considerable abnormality	
Solderability		3/4 or more of the pin surface should be covered with new solder		Conforms to 8.4 Solder temperature: 245 ± 5°C Dipping duration: 5 ± 0.5 sec. Dipped up to 1.6 mm from the lower end of the capacitor.
Soldering Heat Resistance		Capacitance	Satisty initial standard value	Conforms to 8.5 Solder temperature: 260 ± 10°C Dipping duration: 10 ± 1 sec. Dipped up to 1.6 mm from the lower end of the capacitor.
		Equivalent series resistance		
		Current (30-minute value)		
		Appearance	No obvious abnormality	
Temperature Cycle		Capacitance	Satisty initial standard value	Conforms to 9.3 Temperature condition: –25°C → normal temperature → +70°C → normal temperature Number of cycles: 5 cycles
		Equivalent series resistance		
		Current (30-minute value)		
		Appearance	No obvious abnormality	
Humidity Resistance		Capacitance	Within ±20% of initial value	Conforms to 9.5 Temperature: 40 ± 2°C Relative humidity: 90 to 95% RH Test duration: 240 ± 8 hours
		Equivalent series resistance	1.2 or less times initial standard value	
		Current (30-minute value)	1.2 or less times initial standard value	
		Appearance	No obvious abnormality	
High Temperature Load		Capacitance	Within 30% of initial value	Conforms to 9.10 Temperature: 70 ± 2°C Voltage applied: 5.5 Vdc Series protection resistance: 0 Ω Test duration: 1000^{+48}_{0} hours
		Equivalent series resistance	Twice or less times initial standard value	
		Current (30-minute value)	Twice or less times initial standard value	
		Appearance	No obvious abnormality	

FM Series FMR Type

Item		Standard		Test Conditions Conforming to JIS C 5102-1994
Operating Temperature Range		–40°C to +85°C		
Maximum Operating Voltage		5.5 VDC		
Nominal Capacitance Range		See standard list		
Capacitance Allowance		+80%, –20%		See characteristics measuring method.
Equivalent Series Resistance		See standard list		See characteristics measuring method.
Current (30-minutes value)		See standard list		See characteristics measuring method.
Surge Voltage		Capacitance	More than 90% of initial requirement	Conforms to 7.14 Surge Voltage: 6.3 V Temperature: 85 ± 2°C Charge: 30 sec. Discharge: 9 min. 30 sec. Number of cycles 1000 cycles. Series resistance: 0.047 F: 300 Ω Discharge resistance: 0 Ω
		Equivalent series resistance	Not to exceed 120% of initial requirement	
		Current (30-minute value)	Not to exceed 120% of initial requirement	
		Appearance	No obvious abnormality	
Temperature Variation of Characteristics	Phase 2	Capacitance	50% or higher initial value	Conforms to 7.12 Phase 1: +25 ± 2°C Phase 2: –25 ± 2°C Phase 3: –40 ± 2°C Phase 4: +25 ± 2°C Phase 5: +85 ± 2°C Phase 6: +25 ± 2°C
		Equivalent series resistance	4 or less times initial value	
	Phase 3	Capacitance	30% or higher initial value	
		Equivalent series resistance	7 or less times initial value	
	Phase 5	Capacitance	200% or higher initial value	
		Equivalent series resistance	Satisfy initial standard value	
		Current (30-minute value)	1.5 CV (mA) or below	
	Phase 6	Capacitance	Within ±20% of initial standard value	
		Equivalent series resistance	Satisfy initial standard value	
		Current (30-minute value)	Satisfy initial standard value	
Lead Strengh (Tensile)		No loosening nor permanent damage of the leads		Conforms to 8.1.2 (1) 1 kg 10sec.
Vibration Resistance		Capacitance	Satisty initial standard value	Conforms to 8.2.3 Frequency : 10 to 55 Hz Test duration : 6 hours
		Equivalent series resistance		
		Current (30-minute value)		
		Appearance	No obvious abnormality	
Solderability		3/4 or more of the pin surface should be covered with new solder.		Conforms to 8.4 Solder temperature: 245 ± 5°C Dipping duration: 5 ± 0.5 sec. Dipped up to 1.6 mm from the lower end of the capacitor.
*Soldering Heat Resistance ①		Capacitance	Satisty initial standard value	Conforms to 8.5 Solder temperature: 260 ± 10°C Dipping duration: 10 ± 1 sec. Dipped up to 1.6 mm from the lower end of the capacitor.
		Equivalent series resistance		
		Current (30-minute value)		
		Appearance	No obvious able abnormality	
*Soldering Heat Resistance ②		Capacitance	Satisty initial standard value	After reflow pre-heating (160°C ± 5°C 120 ±10 sec.)
		Equivalent series resistance		
		Current (30-minute value)		
		Appearance	No obvious able abnormality	
*Temperature Cycle		Capacitance	Satisty initial standard value	Conforms to 9.3 Temperature condition: –40°C → normal temperature → +85°C → normal temperature Number of cycles: 5 cycles
		Equivalent series resistance		
		Current (30-minute value)		
		Appearance	No obvious abnormality	
* Humidity Resistance		Capacitance	Within 20% of initial value	Conforms to 9.5 Temperature: 40 ± 2°C Relative humidity: 90 to 95% RH Test duration: 240 ± 8 hours
		Equivalent series resistance	1.2 or less times initial standard value	
		Current (30-minute value)	1.2 or less times initial standard value	
		Appearance	No obuious abnormality	
* High Temperature Load		Capacitance	Within 30% of initial value	Conforms to 9.10 Temperature: 85 ± 2°C Voltage applied: 5.5 Vdc Series protection resistance: 0 Ω Test duration: 1000^{+48}_{0} hours
		Equivalent series resistance	Twice or less times initial standard value	
		Current (30-minute value)	Twice or less times initial standard value	
		Appearance	No obvious abnormality	
Voltage Holding Characteristics (Self Discharge)		Voltage between terminal leads higher than 4.2 V		Charging condition: Voltage applied: 5.0 VDC Series resistance: 0 Ω Charging time: 24hours
				Storage: Time: 24hours Temperature:Lower than 25°C Humidity:Lower than 70%RH

*Performance items indicated with * are guaranteed for items after reflow pre-heating.

FM Series FM 6.5V Type

Item		Standard		Test Conditions Conforming to JIS C 5102-1994
Operating Temperature Range		–25°C to +70°C		
Maximum Operating Voltage		6.5 VDC		
Nominal Capacitance Range		See standard list		
Capacitance Allowance		+80%, –20%		See characteristics measuring method.
Equivalent Series Resistance		See standard list		See characteristics measuring method.
Current (30-minutes value)		See standard list		See characteristics measuring method.
Surge Voltage		Capacitance	More than 90% of initial requirement	Conforms to 7.14 Surge Voltage: 7.4 V Temperature: 70 ± 2°C Charge: 30 sec. Discharge: 9 min. 30 sec. Number of cycles 1000 cycles. Series resistance: 0.047 F: 300 Ω Discharge resistance: 0 Ω
		Equivalent series resistance	Not to exceed 120% of initial requirement	
		Current (30-minute value)	Not to exceed 120% of initial requirement	
		Appearance	No obvious abnormality	
Temperature Variation of Characteristics	Phase 2	Capacitance	50% or higher of initial value	Conforms to 7.12 Phase 1: +25 ± 2°C Phase 2: –25 ± 2°C Phase 3: –40 ± 2°C Phase 4: +25 ± 2°C Phase 5: +70 ± 2°C Phase 6: +25 ± 2°C
		Equivalent series resistance	4 or less times initial value	
	Phase 5	Capacitance	200% or below of initial value	
		Equivalent series resistance	Satisty initial standard value	
		Current (30-minute value)	1.5 CV (mA) or below	
	Phase 6	Capacitance	Within ±20% of initial value	
		Equivalent series resistance	Satisty initial standard value	
		Current (30-minute value)	Satisty initial standard value	
Lead Strengh (Tensile)		No loosening nor permanent damage of the leads		Conforms to 8.1.2 (1) 1 kg 10sec.
Vibration Resistance		Capacitance	Satisty initial standard value	Conforms to 8.2.3 Frequency : 10 to 55 Hz Test duration : 6 hours
		Equivalent series resistance		
		Current (30-minute value)		
		Appearance	No obvious abnormality	
Solderability		3/4 or more of the pin surface should be covered with new solder		Conforms to 8.4 Solder temperature: 245 ± 5°C Dipping duration: 5 ± 0.5 sec. Dipped up to 1.6 mm from the lower end of the capacitor.
Soidering Heat Resistance		Capacitance	Satisty initial standard value	Conforms to 8.5 Solder temperature: 260 ± 10°C Dipping duration: 10 ± 1 sec. Dipped up to 1.6 mm from the lower end of the capacitor.
		Equivalent series resistance		
		Current (30-minute value)		
		Appearance	No obvious able abnormality	
Temperature Cycle		Capacitance	Satisty initial standard value	Conforms to 9.3 Temperature condition: –25°C → normal temperature → +70°C → normal temperature Number of cycles: 5 cycles
		Equivalent series resistance		
		Current (30-minute value)		
		Appearance	No obvious abnormality	
Humidity Resistance		Capacitance	Within 20% of initial value	Conforms to 9.5 Temperature: 40 ± 2°C Relative humidity: 90 to 95% RH Test duration: 240 ± 8 hours
		Equivalent series resistance	1.2 or less times initial standard value	
		Current (30-minute value)	1.2 or less times initial standard value	
		Appearance	No obuious abnormality	
High Temperature Load		Capacitance	Within 30% of initial value	Conforms to 9.10 Temperature: 70 ± 2°C Voltage applied: 6.5 Vdc Series protection resistance: 0 Ω Test duration: 1000^{+48}_{0} hours
		Equivalent series resistance	Twice or less times initial standard value	
		Current (30-minute value)	Twice or less times initial standard value	

FM Series FMC Type

Item		Standard		Test Conditions Conforming to JIS C 5102-1994
Operating Temperature Range		–25°C to +70˚C		
Maximum Operating Voltage		5.5 VDC		
Nominal Capacitance Range		0.047F , 0.10F , 0.33F		
Capacitance Allowance		+80%, –20%		See characteristics measuring method.
Equivalent Series Resistance		See standard list		See characteristics measuring method.
Current (30-minutes value)		See standard list		See characteristics measuring method.
Surge Voltage		Capacitance	More than 90% of initial requirement	Conforms to 7.14 Surge Voltage: 6.3 V Temperature: 70 ± 2°C Chargs: 30 sec. Dischargs: 9 min. 30 sec. Number of cycles 1000 cycles. Series resistance: 0.1 F: 150 Ω 0.33 F: 51 Ω 0.047 F: 300 Ω Discharge resistance: 0 Ω
		Equivalent series resistance	Not to exceed 120% of initial requirement	
		Current (30-minute value)	Not to exceed 120% of initial requirement	
		Appearance	No obvious abnormality.	
Temperature Variation of Characteristics	Phase 2	Capacitance	50% or higher of initial value	Conforms to 7.12 Phase 1: +25 ± 2°C Phase 2: –25 ± 2°C Phase 3: –40 ± 2°C Phase 4: +25 ± 2°C Phase 5: +70 ± 2°C Phase 6: +25 ± 2°C
		Equivalent series resistance	3 or less times initial value	
	Phase 5	Capacitance	150% or below of initial value	
		Equivalent series resistance	Satisty initial standard value	
		Current (30-minute value)	1.5 CV (mA) or below	
	Phase 6	Capacitance	Within ±20% of initial value	
		Equivalent series resistance	Satisty initial standard value	
		Current (30-minute value)	Satisty initial standard value	
Lead Strengh (Tenile)		No loosening nor permanent damage of the leads		Conforms to 8.1.2 (1) 1 kg 10 sec
Vibration Resistance		Capacitance	Should satisty initial standard value	Conforms to 8.2.3 Frequency: 10 to 55 Hz Test duration: 6 hours
		Equivalent series resistance		
		Current (30-minute value)		
		Appearance	There should be no considerable abnormality	
Solderability		3/4 or more of the pin surface should be covered with new solder		Conforms to 8.4 Solder temperature: 245 ± 5°C Dipping duration: 5 ± 0.5 sec. Dipped up to 1.6 mm from the lower end of the capacitor.
Soldering Heat Resistance		Capacitance	Satisty initial standard value	Conforms to 8.5 Solder temperature: 260 ± 10°C Dipping duration: 10 ± 1 sec. Dipped up to 1.6 mm from the lower end of the capacitor.
		Equivalent series resistance		
		Current (30-minute value)		
		Appearance	No obvious abnormality	
Temperature Cycle		Capacitance	Satisty initial standard value	Conforms to 9.3 Temperature condition: –25°C → normal temperature → +70°C → normal temperature Number of cycles: 5 cycles
		Equivalent series resistance		
		Current (30-minute value)		
		Appearance	No obvious abnormality	
Humidity Resistance		Capacitance	Within ±20% of initial value	Conforms to 9.5 Temperature: 40 ± 2°C Relative humidity: 90 to 95% RH Test duration: 240 ± 8 hours
		Equivalent series resistance	1.2 or less times initial standard value	
		Current (30-minute value)	1.2 or less times initial standard value	
		Appearance	No obvious abnormality	
High Temperature Load		Capacitance	Within 30% of initial value	Conforms to 9.10 Temperature: 70 ± 2°C Voltage applied: 5.5 Vdc Series protection resistance: 0 Ω Test duration: 1000^{+48}_{0} hours
		Equivalent series resistance	Twice or less times initial standard value	
		Current (30-minute value)	Twice or less times initial standard value	
		Appearance	No obvious abnormality	
*Voltage Holding Characteristics (Self Dischage)		Voltage between terminal leads higher then 4.2V		Charging condition: Voltage applied: 5.0 VDC Series resistance: 0 Ω Charging time: 24hours
				Storage: Time: 24hours Temperature:Lower than 25°C Humidity:Lower than 70%RH

*The characteristics above must be satisfied for asterisked items after the end of reflow soldering (according to the reflow condition shown on page).

FA Series

Item		Specification		Test Conditions Conforming to JIS C 5102-1994
Operating Temperature Range		–25˚C to 70˚C		
Maximun Rated Voltage		5.5 VDC, 11.0 VDC		
Nominal Capacitance Range		0.047 to 1.0 F (Refer to standard ratings)		
Capacitance Allowance		+80 %, –20 %		See characteristics measuring conditions
Equivalent Series Resistance		See standard list		See characteristics measuring conditions
Current (30-minute value)		See standard list		See characteristics measuring conditions
Temperature Variation of Characteristics	At min. temp. (–25˚C Step 2)	Capacitance	More than 70 % of initial value	Conforms to 7.14 Phase 1 : +25±2.0˚C Phase 2 : –25±2.0˚C Phase 3 : +25±2.0˚C Phase 4 : +70±2.0˚C Phase 5 : +25±2.0˚C
		Equivalent Series Resistance	Not to exceed 3 times initial value	
	At max. temp. (+70˚C Step 4)	Capacitance	Not to exceed 150 % of initial value	
		Equivalent Series Resistance	Not to exceed initial requirement	
		Current at 30 minutes	Not to exceed 1.5 CV (mA)	
	At room temp. (+25˚C Step 5)	Capacitance	Not to change more than ±20 % from initial value	
		Equivalent Series Resistance	Not to exceed initial requirement	
		Current at 30 minutes	Not to exceed initial requirement	
Lead Strength (Tensile)		No loosening nor permanent damage of the leads		Conforms to 8.1.2 (1) 5.5 VDC: 0.047 F to 0.22 F: 1 kg 10 sec 5.5 VDC: 0.47 F to 1.0 F: 2.5 kg 10 sec 11 VDC: 0.022 F to 0.1 F: 1 kg 10 sec 11 VDC: 0.22 F to 0.47 F: 2.5 kg 10 sec
Vibration Resistance		Capacitance	Meet initial requirement	Conforms to 8.2.3 Frequency: 10 to 55 Hz Test duration: 6 hours
		Equivalent Series Resistance	Meet initial requirement	
		Current at 30 minutes	Meet initial requirement	
Solderability		3/4 or more of the pin surface should be covered with new solder		Conforms to 8.4 245 ±5˚C, 5 ±0.5 sec. Immersion depth: 2.5 mm from body
Soldering Heat Resistance		Capacitance	Meet initial requirement	Conforms to 8.5 260 ±10˚C, 10 ±1 sec. Immersion depth: 2.5 mm from body
		Equivalent Series Resistance	Meet initial requirement	
		Current at 30 minutes	Meet initial requirement	
Temperature Cycle		Capacitance	Meet initial requirement	Conforms to 9.3 Temperature conitiom: –25˚C → normal temperature →+70˚C normal temperature Number of cycles : 5 cycles
		Equivalent Series Resistance	Meet initial requirement	
		Current at 30 minutes	Meet initial requirement	
Humidity Resistance		Capacitance	More than 90 % of initial requirement	Conforms to 9.5 40 ±2˚C, 90 to 95 % RH 240 ± 8 hours
		Equivalent Series Resistance	Not to exceed 120 % of initial requirement	
		Current at 30 minutes	Not to exceed 120 % of initial requirement	
High Temperature Load		Capacitance	More than 85 % of initial requirement	Conforms to 9.10 70 ±2˚C 5.5 V applied for 5 V type 11 V applied for 10 V type 1 000 $^{+48}_{-0}$ hours
		Equivalent Series Resistance	Not to exceed 120 % of initial requirement	
		Current at 30 minutes	Not to exceed 200 % of initial requirement	

FE Series

Item		Specification		Test Conditions Conforming to JIS C 5102-1994
Operating Temperature Range		–40˚C to 70˚C		
Maximun Rated Voltage		5.5 VDC		
Nominal Capacitance Range		0.047 to 1.5 F (Refer to standard ratings)		
Capacitance Allowance		+80 %, –20 %		See characteristics measuring conditions
Equivalent Series Resistance		See standard list		See characteristics measuring conditions
Current (30-minute value)		See standard list		See characteristics measuring conditions
Surge Voltage		Capacitance	More than 90 % of initial requirement	Conforms to 7.14 At 70˚C Surge voltage 6.3 V Temperature : 70±2˚C Charge: 30 sec. Discharge: 9 min. 30 sec. 1 000 cycles Charge resistance : 0.047 F 300 Ω 0.10 F 150 Ω 0.22 F 56 Ω 0.47 F 30 Ω 1.0, 1.5 F 15 Ω Discharge resistance: Not applicable (0 Ω)
		Equivalent Series Resistance	Not to exceed 120 % of initial requirement	
		Current at 30 minutes	Not to exceed 120 % of initial requirement	
Temperature Variation of Characteristics	Phase 3	Capacitance	More than 40 % of initial value	Conforms to 7.12 Phase 1: +25 ± 2˚C Phase 2: –25 ± 2˚C Phase 3: –40 ± 2˚C Phase 4: +25 ± 2˚C Phase 5: +70 ± 2˚C Phase 6: +25 ± 2˚C
		Equivalent Series Resistance	Not to exceed 4 times initial value	
	Phase 5	Capacitance	Not to exceed 200 % of initial value	
		Equivalent Series Resistance	Not to exceed initial requirement	
		Current at 30 minutes	Not to exceed 1.5 CV (mA)	
	Phase 6	Capacitance	Within ±20 % of initial value	
		Equivalent Series Resistance	Not to exceed initial requirement	
		Current at 30 minutes	Not to exceed initial requirement	
Lead Strength (Tensile)		No loosening nor permanent damage of the leads		Conforms to 8.1.2 (1) 0.047 to 0.47 F: 1 kg, 10 sec. 1 F, 1.5 F : 2.5 kg, 10 sec.
Vibration Resistance		Capacitance	Meet initial requirement	Conforms to 8.2.3 Frequency: 10 to 55 Hz Test duration: 6 hours
		Equivalent Series Resistance	Meet initial requirement	
		Current at 30 minutes	Meet initial requirement	
Solderability		3/4 or more of the pin surface should be covered with new solder		Conforms to 8.4 245 ±5˚C Immersion depth: 5 ±0.5 sec. 1.6 mm from body
Soldering Heat Resistance		Capacitance	Meet initial requirement	Conforms to 8.5 260 ±10˚C, 10 ±1 sec. Immersion depth : 1.6 mm from body
		Equivalent Series Resistance	Meet initial requirement	
		Current at 30 minutes	Meet initial requirement	
Temperature Cycle		Capacitance	Shall meet initial requirement	Conforms to 9.3 Temperature condition: –40˚C → normal temperture → +70˚C → normal temperture Number of cycles : 5 cycles
		Equivalent Series Resistance	Meet initial requirement	
		Current at 30 minutes	Meet initial requirement	
Humidity Resistance		Capacitance change	Within ±20 % of initial value	Conforms to 9.5 40 ± 2˚C, 90 to 95 % RH 240 hours 240 ± 8 hours
		Equivalent Series Resistance	Not to exceed 120 % of initial requirement	
		Current at 30 minutes	Not to exceed 120 % of initial requirement	
High Temperature Load		Capacitance change	Within ±30 % of initial value	Conforms to 9.10 70 ± 2˚C 5.5 V applied 1 000 $^{+48}_{-0}$ hours
		Equivalent Series Resistance	Not to exceed 300 % of initial requirement	
		Current at 30 minutes	Not to exceed 200 % of initial requirement	

FS Series

Item		Standard		Test Conditions Conforming to JIS C 5102-1994
Operating Temperature Range		–25°C to +70°C		
Maximum Operating Voltage		5.5 VDC, 11 VDC, 12 VDC		
Nominal Capacitance Range		0.022 to 1.0 F (5.5 V products), 0.47 F to 1.0 F (11 V products), 1.0 F to 5.0 F (12 V products)		See characteristics measuring method.
Capacitance Allowance		+80%, –20%		
Equivalent Series Resistance		See standard list		See characteristics measuring method.
Current (30-minutes value)		See standard list		See characteristics measuring method.
Surge Voltage		Capacitance	More than 90% of initial requirement	Conforms to 7.14 Surge voltage: 6.3 V (5.5 V products) 12.6 V (11 V products) 13.6 V (12 V products) Temperature: 70 ± 2°C Chargs: 30 seconds Discharge: 9 min. 30 sec. Number of cycles 1000 cycles. Series resistance: 0.022 F 560 Ω 0.047 F 300 Ω 0.1 F 150 Ω 0.22 F 56 Ω 0.47 F 30 Ω 1 F 15 Ω 5 F 10 Ω Discharge resistance: 0 Ω
		Equivalent series resistance	Not to exceed 120% of initial requirement	
		Current (30-minute value)	Not to exceed 120% of initial requirement	
		Appearance	No obvious abnormality	
Temperature Variation of Characteristics	Phase 2	Capacitance	50% or higher of initial value	Conforms to 7.12 Phase 1: +25 ± 2°C Phase 2: –25 ± 2°C Phase 3: –40 ± 2°C Phase 4: +25 ± 2°C Phase 5: +70 ± 2°C Phase 6: +25 ± 2°C
		Equivalent series resistance	3 or less times initial value	
	Phase 5	Capacitance	150% or below of initial value	
		Equivalent series resistance	Satisty initial standard value	
		Current (30-minute value)	1.5 CV (mA) or below	
	Phase 6	Capacitance	Within ± 20% of initial value	
		Equivalent series resistance	Satisty initial standard value	
		Current (30-minute value)	Satisty initial standard value	
Lead Strengh (Tensile)		No loosening nor permanent damage of the leads		Conforms to 8.1.2 (1) 5.5 VDC: 0.022 F to 0.22 F: 1 kg 10 sec 5.5 VDC: 0.47 F to 1.0 F: 2.5 kg 10 sec 11 VDC: 2.5 kg 10 sec 12 VDC: 2.5 kg 10 sec
Vibration Resistance		Capacitance	Satisty initial standard value	Conforms to 8.2.3 Frequency: 10 to 55 Hz Test duration: 6 hours
		Equivalent series resistance		
		Current (30-minute value)		
		Appearance	No obvious abnormality	
Solderability		3/4 or more of the pin surface should be covered with new solder		Conforms to 8.4 Solder temperature: 245 ± 5°C Dipping duration: 5 ± 0.5 sec. Should be dipped up to 1.6 mm from the lower end of the capacitor.
Soldering Heat Resistance		Capacitance	Satisty initial standard value	Conforms to 8.5 Solder temperature: 260 ± 10°C Dipping duration: 10 ± 1 sec. Dipped up to 1.6 mm from the lower end of the capacitor.
		Equivalent series resistance		
		Current (30-minute value)		
		Appearance	No obvious abnormality	
Temperature Cycle		Capacitance	Satisty initial standard value	Conforms to 9.3 Temperature condition: –25°C → normal temperature → +70°C → normal temperature Number of cycles: 5 cycles
		Equivalent series resistance		
		Current (30-minute value)		
		Appearance	No obvious abnormality	
Humidity Resistance		Capacitance	90% or higher of initial standard value (5.5 V products) Within 20% of initial value (11 V, 12 V products)	Conforms to 9.5 Temperature: 40 ± 2°C Relative humidity: 90 to 95% RH Test duration: 240 ± 8 hours
		Equivalent series resistance	1.2 or less times initial standard value	
		Current (30-minute value)	1.2 or less times initial standard value	
		Appearance	No obvious abnormality	
High Temperature Load		Capacitance	85% or higher of initial standard value (5.5 V products) Within ±30% of initial value (11 V, 12 V products)	Conforms to 9.10 Temperature: 70 ± 2°C Voltage applied: Maximum operating voltage Series protection resistance: 0 Ω Test duration: 1000^{+48}_{0} hours
		Equivalent series resistance	Twice or less times initial standard value	
		Current (30-minute value)	Twice or less times initial standard value	
		Appearance	No obvious abnormality	

FR Series

Item		Specification		Test Conditions Conforming to JIS C 5102-1994
Operating Temperature Range		–40˚C to +85˚C		
Maximun Working Voltage		5.5 Vdc		
Nominal Capacitance Range		0.022 to 1.0 F (Refer to standard ratings)		
Capacitance Allowance		+80 %, –20 %		See characteristics measuring conditions
Equivalent Series Resistance		See standard list		See characteristics measuring conditions
Current (30-minute Value)		See standard list		See characteristics measuring conditions
Surge Voltage		Capacitance	More than 90 % of initial requirement	Conform to 7.14 Surge voltage 6.3 V Temperature : 85± 2˚C Charge: 30 sec. Discharge: 9 min. 30 sec. 1 000 cycles Charge resistance: 0.022 F 560 Ω 0.047 F 300 Ω 0.10 F 150 Ω 0.22 F 56 Ω 0.47 F 30 Ω 1.0 F 15 Ω Discharge resistance: Not applicable (0 Ω)
		Equivalent Series Resistance	Not to exceed 120 % of initial requirement	
		Current at 30 minutes	Not to exceed 120 % of initial requirement	
Temperature Variation of Characteristics	Phase 2	Capacitance	More than 50 % of initial value	Conform to 7.12 Phase 1: +25 ±2˚C Phase 2: –25 ±2˚C Phase 3: –40 ±2˚C Phase 4: +25 ±2˚C Phase 5: +85 ±2˚C Phase 6: +25 ±2˚C
		Equivalent Series Resistance	Not to exceed 4 times initial value	
	Phase 3	Capacitance	More than 30 % of initial value	
		Equivalent Series Resistance	Not to exceed 7 times initial value	
	Phase 5	Capacitance	Not to exceed 200 % of initial value	
		Equivalent Series Resistance	Not to exceed initial requirement	
		Current at 30 minutes	Not to exceed 1.5 CV (mA)	
	Phase 6	Capacitance	Within ±20 % of initial value	
		Equivalent Series Resistance	Not to exceed initial requirement	
		Current at 30 minutes	Not to exceed initial requirement	
Lead Strength (Tensile)		No loosening nor permanent damage of the leads		Conform to 8.1.2 (1) 0.022 to 0.47 F: 1 kg, 10 sec. 1 F: 2.5 kg, 10 sec.
Vibration Resietance		Capacitance	Meet initial requirement	Conform to 8.2.3 Frequency: 10 to 55 Hz Test duration: 6 hours
		Equivalent Series Resistance	Meet initial requirement	
		Current at 30 minutes	Meet initial requirement	
Solderability		3/4 or more of the pin surface shoud be covered with new solder		Conform to 8.4 245 ± 5˚C 5 ± 0.5 sec. 1.6 mm from body
Soldering Heat Resistance		Capacitance	Meet initial requirement	Conform to 8.5 260 ±10˚C, 10 ±1 sec. Immersion depth: 1.6 mm from body
		Equivalent Series Resistance	Meet initial requirement	
		Current at 30 minutes	Meet initial requirement	
Temperature Cycle		Capacitance	Meet initial requirement	Conform to 9.3 Temperature condition: –40°C → normal temperature → +85°C → normal temperature Number of cycles: 5 cycles
		Equivalent Series Resistance	Meet initial requirement	
		Current at 30 minutes	Meet initial requirement	
Humidity Resistance		Capacitance	Within ± 20% of initial value	Conform to 9.5 40 ± 2˚C, 90 to 95% RH 240 ± 8 hours
		Equivalent Series Resistance	Not to exceed120 % of initial requirement	
		Current at 30 minutes	Not to exceed120 % of initial requirement	

Item	Specification		Test Conditions Conforming to JIS C 5102-1994	
High Temperature Load	Capacitance change	Within ±30% of initial value	Conforms to 9.10 Temperature: 85 ± 2°C Series resistance: 0 Ω Applied voltage: 5.5 VDC Time of test: 1000^{+48}_{-0} hours	
	Equivalent Series Resistance	Not to exceed 200% of initial requirement		
	Current at 30 minutes	Not to exceed 200% of initial requirement		
Voltage Holding Characteristics	Voltage between terminal leads higher than 4.2V		Charging	(1) Applied Voltage: 5.0 V (2) Series Resistance: 0 Ω (3) Charging time: 24 h
			Storege	(1) Load: Nothing (2) Temp.: Less than 25°C (3) Humidity: Less than 70% RH (4) Storage time: 24 h

3.5V, 6.5V Rated Voltage Series

Items		Specifications		Test Conditions Conforming to JIS C 5102-1994
Operating Temperature Range		–25˚C to +70˚C		
Maximum Rated Voltage		3.5 VDC, 6.5 VDC		
Nominal Capacitance Range		See standard ratings		
Capacitance Allowance		+80 %, –20 %		See characteristics measuring conditions
Equivalent Series Resistance		See standard list		See characteristics measuring conditions
Current (30-minutes value)		See standard list		See characteristics measuring conditions
Surge Voltage		Capacitance	More than 90 % of initial requirement	Conforms to 7.14 Surge voltage: 4.0 V (3.5 VDC), 7.4 V (6.5 VDC) rated part rated part Temperature: 70±2˚C Charging for 30 seconds Discharging for 9 min 30 sec. Number of cycles: 1 000 cycles Charge resistance: 0.022 F 560 Ω 0.027 F 560 Ω 0.043 F 300 Ω 0.056 F 240 Ω No discharge resistance
		Equivalent Series Resistance	Less than 200% of initial requirement	
		Current 30 minutes	Less than 120% of initial requirement	
		Appearance	No significant change	
Temperature Variation of Characteristics	Phase 2	Capacitance	More than 50 % of initial value	Conforms to 7.12 Phase 1: +25 ±2˚C Phase 2: –25 ±2˚C Phase 3: –40 ±2˚C Phase 4: +25 ±2˚C Phase 5: +70 ±2˚C Phase 6: +25 ±2˚C
		Equivalent Series Resistance	Less than 400% of initial value	
	Phase 5	Capacitance	Less than 200% of initial value	
		Equivalent Series Resistance	Initial requirement	
		Current 30 minutes	Less than 1.5 CV (mA)	
	Phase 6	Capacitance	Within ±20% of initial value	
		Equivalent Series Resistance	Initial requirement	
		Current 30 minutes	Initial requirement	
Vibration Resistance		Capacitance	Shall meet initial requirements	Conforms to 8.2.3 Frequency: 10 to 55 Hz Time of test: 6 hours
		Equivalent Series Resistance		
		Current 30 minutes		
		Appearance	No significant change	
Solderability		3/ 4 or more of the pin surface should be covered with new solder		Conforms to 8.4 Temperature of solder: 245 ±5˚C Time of immersion: 5 ±0.5 seconds To immerse capacitors up to 1.6 mm from the bottom
Soldering Heat Resistance		Capacitance	Shall meet initial requirements	Conforms to 8.5 Temperature of solder: 260 ±10˚C Time of immersion: 10 ±1 seconds To immerse capacitors up to 1.6 mm from the bottom
		Equivalent Series Resistance		
		Current 30 minutes		
		Appearance	No significant change	
Temperature Cycle		Capacitance	Shall meet initial requirements	Conforms to 9.3 Temperature condition: –25˚C → normal temperature → +70˚C → normal temperature Number of cycles: 5 cycles
		Equivalent Series Resistance		
		Current 30 minutes		
		Appearance	No significant change	
Humidity Resistance		Capacitance	Within ±20% of initial value	Conforms to 9.5 Temperature: 40 ±2˚C Humidity: 90 to 95% RH Time of test: 240 ± 8 hours
		Equivalent Series Resistance	Less than 200% of initial requirement	
		Current 30 minutes	Less than 120% of initial requirement	
		Appearance	No significant change	
High Temperature Load		Capacitance	Within ±30% of initial requirement	Conforms to 9.10 Temperature: 70 ±2˚C Series resistance: 0 Ω Applied voltage: 3.5 VDC, 6.5 VDC Time of test: 1000^{+48}_{-0} hours
		Equivalent Series Resistance	Less than 300% of initial requirement	
		Current 30 minutes	Less than 200% of initial requirement	
		Appearance	No significant change	

FY Series

Items		Specifications		Test Conditions Conforming to JIS C 5102-1994
Operating Temperature Range		–25˚C to +70˚C		
Maximum Operating Voltage		5.5 Vdc		
Nominal Capacitance Range		See standard list		
Capacitance Allowance		+80 %, –20 %		See characteristics measuring conditions
Equivalent Series Resistance		See standard list		See characteristics measuring conditions
Current (30-minutes Value)		See standard list		See characteristics measuring conditions
Surge Voltage		Capacitance	More than 90 % of initial requirement	Conforms to 7.14 Surge voltage: 6.3 V Temperature: 70 ± 2˚C Charging for 30 seconds Discharging for 9 min. 30 sec. Number of cycles 1 000 cycles Charge resistance : 0.01 F 1500 Ω 0.47 F 30 Ω 0.022 F 560 Ω 1.0 F 15 Ω 0.047 F 300 Ω 1.4 F 15 Ω 0.10 F 150 Ω 2.2 F 10 Ω 0.22 F 56 Ω No discharge resistance
		Equivalent Series Resistance	Less than 120% of initial requirement	
		Current at 30 minutes	Less than 120% of initial requirement	
		Appearance	No significant change	
Temperature Variation of Characteristics	Phase 2	Capacitance	More than 50 % of initial value	Conforms to 7.12 Phase 1: +25 ± 2˚C Phase 2: –25 ± 2˚C Phase 3: –40 ± 2˚C Phase 4: +25 ± 2˚C Phase 5: +70 ± 2˚C Phase 6: +25 ± 2˚C
		Equivalent Series Resistance	Less than 400% of initial value	
	Phase 5	Capacitance	Less than 200% of initial value	
		Equivalent Series Resistance	Initial requirement	
		Current at 30 minutes	Less than 1.5 CV (mA)	
	Phase 6	Capacitance	Within ± 20% of initial value	
		Equivalent Series Resistance	Initial requirement	
		Current at 30 minutes	Initial requirement	
Lead Strength (Tensile)		No loosening nor permanent damage of the leads		Conforms to 8.1.2 (1) FYD0H105Z FYD0H145Z FYD0H225Z FYH0H474Z FYH0H105Z : 2.5 kg-f 10 ± 1 sec. Others: 1.0 kg-f 10 ± 1 sec.
Vibration Resistance		Capacitance	Meet initial requirements	Conforms to 8.2.3 Frequency: 10 to 55 Hz Time of test: 6 hours
		Equivalent Series Resistance		
		Current at 30 minutes		
		Appearance	No significant change	
Solderability		3/4 or more of the pin of surface should be covered with the solder		Conforms to 8.4 Temperature of solder: 230 ± 5˚C Time of immersion: 5 ± 0.5 second To immerse capacitors up to 1.6 mm from the bottom
Soldering Heat Resistance		Capacitance	Meet initial requirements	Conforms to 8.5 Temperature of solder: 260 ± 10˚C Time of immersion: 10 ± 1 seconds To immerse capacitors up to 1.6 mm from the bottom
		Equivalent Series Resistance		
		Current at 30 minutes		
		Appearance	No significant change	
Temperature Cycle		Capacitance	Shall meet initial requirements	Conforms to 9.3 Temperature condition: –25˚C → normal temperature → +70˚C → normal temperature Number of cycles: 5 cycles
		Equivalent Series Resistance		
		Current at 30 minutes		
		Visual appearance	No significant change	
Humidity Resistance		Capacitance	Within ± 20% of initial value	Conforms to 9.5 Temperature: 40 ± 2˚C Humidity: 90 to 95% RH Time of test: 240 ± 8 hours
		Equivalent Series Resistance	Less than 120% of initial requirement	
		Current at 30 minutes	Less than 120% of initial requirement	
		Appearance	No significant change	
High Temperature Load		Capacitance	Within ± 30% of initial value	Conforms to 9.10 Temperature: 70 ± 2˚C Series resistance: 0 Ω Applied voltage: 5.5 VDC Time of test: 1000^{+48}_{-0} hours
		Equivalent Series Resistance	Less than 200% of initial requirement	
		Current at 30 minutes	Less than 200% of initial requirement	
		Appearance	No significant change	
Voltage Holding Characteristics (Self Discharge)		Voltage between terminal leads higher than 4.2 V.		Charging condition: Applied voltage: 5.0 VDC Series resistance: 0 Ω Curging time: 24 hours Storage: Load: Nothing Temperature: Lower than 25˚C Humidity: Lower than 70% RH Time: 24 hours

Super Capacitor HV Series

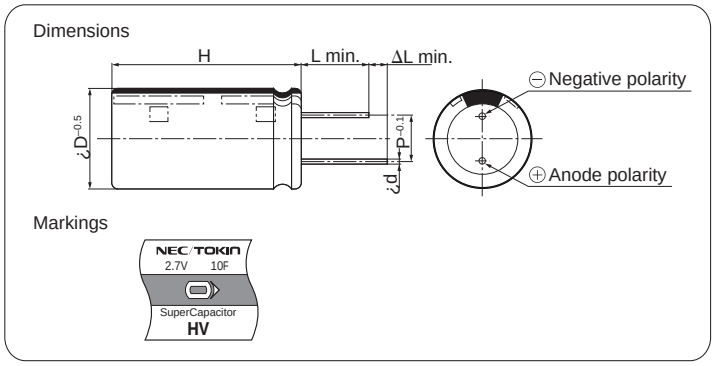

Standard Rating

Part No.	Max. Rated Voltage (Vdc)	Nominal Capacitance (F)	Max. ESR (at 1 kHz) (mΩ)	Max. Current at 30 minutes (mA)	Dimensions (Unit: mm)						Weight (g)
					∅D	H	P	∅d	l	ΔL	
HV0E106N	2.7	10	500	8	10.0	35±2	5.0	0.6	15.0	5.0	3.0
HV0E226N	2.7	22	500	18	12.5	35±2	5.0	0.6	15.0	5.0	3.7
HV0E506N	2.7	50	100	40	18.0	40±5	7.5	0.8	15.0	5.0	9.1
HV0E107N	2.7	100	100	80	22.0	50±5	10.2	1.0	18.0	7.0	2.5

Specifications

Item		Specification		Test Conditions Conforming to JIS C 5102–1994
Operating Temperature Range		–25˚C to +60˚C		
Maximum Operating Voltage		5.5 Vdc		
Nominal Capacitance Range		10F to 50F		
Capacitance Allowance		±30%		
Equivalent Series Resistance (ESR)		See Standard list		
Current at 30 minutes		See Standard list		
Tempere Variation of Characteristics	Phase 2	Capacitance	More than 50% of initial value	Conforms to 7.12 Phase2: –25±2˚C Phase4: +60±2˚C Phase5: +25±2˚C
		ESR	Not to exceed 4 times initial value	
	Phase 4	Capacitance	Not to exceed 150% of initial value	
		ESR	Not to exceed initial requirement	
		Current at 30minutes	Not to exceed 1.5CV(mA)	
	Phase 5	ΔC/C	Within ±20% of initial value	
		ESR	Not to exceed initial requirement	
		Current at 30 minutes	Not to exceed initial requirement	
Lead Strength (Tensile)		No loosening nor permanent damage of the leads		Conforms to 8.1.2 (1)
Vibration Resistance		Caoacitance	Meet initial standard value	Conforms to 8.2.3 (1) Frequency: 10 to 55Hz Test duration: 6 hours
		ESR		
		Current at 30 minutes		
		Appearance	Noobvious abnormality	
Solderability		3/4 or more of the pin surface should be covered with new solder		Conforms to 8.4 Solder temperature: 230±5˚C Dipping duration: 5±0.5sec. Shold be dipped up to 1.6mm from the lower end of the capacitor
Soldering Heat Resistance		Capacitance	Should satisfy initial standard value	Conforms to 8.5 Solder temperature: 260±10˚C Dipping duration: 10±1sec. Shold be dipped up to 1.6mm from the lower end of the capacitor
		ESR		
		Current at 30 minutes		
		Appearance	No obvious abnormality	
Temperature Cycle		Capacitance	Meet initial standard value	Conforms to 9.3 Temperature: –25˚C→R.T.→+60˚C→R.T. Number of cycles: 5 cycles
		ESR		
		Current at 30 minutes		
		Appearance	No obvious abnormality	
Humidity Resistance		Capacitance	Within ±20% of initial value	Conforms 9.5 Temperature: 40±2˚C Relative humidity: 90 to 95% RH Test duration: 240±8hours
		ESR	1.2 or less time initial standard value	
		Current at 30 minutes	1.2 or less time initial standard value	
		Appearance	No obvious abnormality	
High Temperature Load Life		Capacitance	Within ±30% of initial value	Conforms 9.10 Temperature: 60±2˚C Voltage applied: 5.5Vdc Test duration: 1000^{+48}_{-0} hours Series protection resistance: 0Ω
		ESR	Twice or less times initial standard value	
		Current at 30 minutes	Twice or less times initial standard value	
		Appearance	No obvious abnormality	

When using our products, the following precautions should be taken.

(1) Safety designing of an apparatus or a system allowing for failures of electronic components used in the system

In general, failures will occur in electronic components at a certain probability. NEC TOKIN makes every effort to improve the quality and reliability of electronic component products. However, it is impossible to completely eliminate the probability of failures. Therefore, when using NEC TOKIN's electronic component products, systems should be carefully designed to ensure redundancy in the event of an accident which would result in injury or death, fire, or social damage, to ensure the prevention of the spread of fire, and the prevention of faulty operation. (Please refer to pre-cautions to be taken when using SuperCapacitor capacitors for the details of failures.)

(2) Quality level of various kinds of parts, and equipment in which the parts can be utilized
Electronic components have a standard quality level unless otherwise specified.

NEC TOKIN classifies the level of quality of electronic component products into three levels, in order from a lower level, a standard quality level, a special quality level, and a custom quality level in which a customer individually specifies a quality assurance program. Each of the quality levels has recommended applications.
If a user wants to use the electronic parts having a standard quality level in applications other than the applications specified for the standard quality level, they should always consult a member of our company's sales staff before using the electronic parts.

Standard quality level:	Computers, office automation equipment, communications equipment, measuring instruments, AV equipment, household electrical appliances, machine tools, personal equipment, industrial robots
Special quality level:	Transportation equipment (automobiles, railways, shipping, or the like), traffic signals, disaster prevention/crime prevention systems, safety devices, and medical equipment which is not directly intended for life-support purposes
Custom quality level:	Equipment for airplanes, aerospace equipment, nuclear power control systems, and medical equipment, apparatus or systems for life-support purposes

Unless otherwise shown, the quality level of NEC TOKIN's electronic component products included in documents such as catalogues, data sheets or data books is the standard quality level.

(3) This manual is subject to change without notice.

The contents of this manual are based on data which is correct as of September 2002, and they may be changed without notice. If our products are used for mass-production design, please cousult with a member of our company's sales staff by way of precaution.

(4) Reprinting and copying of this manual without prior written permission from NEC TOKIN Corporation are not permitted.

(5) Industrial property problems

In the event any problems associated with industrial property of a third party arising as a result of the use of our products, NEC TOKIN assumes no responsibility for problems other than problems directly associated with the constitution and manufacturing method of the products.

(6) Should any of these products come under the category of strategic goods or services (according to Japan's foreign trade and foreign exchange regulations), the sender must obtain an export license from the Japanese Government befor said products can be exported outside Japan.

NEC/TOKIN NEC TOKIN Corporation

International Business Headquarters
5-8, Kita-Aoyama 2-chome, Minato-ku, Tokyo 107-8620, Japan
Phone:81-3-3402-6179 Fax:81-3-3402-6172

Seoul Branch
#512-1, Korea City Air Terminal Bldg., 159-6, Samsung-Dong, Kangnam-ku, Seoul, Korea
Phone:82-2-551-3651 Fax:82-2-551-3650

NEC TOKIN America Inc. (Headquarters & Western Area Sales)
32950 Alvarado-Niles Road, Suite 500, Union City, California 94587, U.S.A.
Phone:1-510-324-4110 Fax:1-510-324-1762

Eastern Area Sales Office (Chicago Office)
9820 Capitol Drive, Wheeling, Illinois 60090, U.S.A.
Phone:1-847-215-8802 Fax:1-847-215-8804

Southwest Regional Sales (San Diego Office)
2945 Harding Street, Suite 211, Carlsbad, California 92008, U.S.A.
Phone:1-760-434-5044 Fax:1-760-434-5045

Southeast Regional Sales (Tampa Office)
5440 Mariner Street, Suite 207, Tampa, Florida 33609, U.S.A.
Phone:1-813-281-1183 Fax:1-813-281-2544

NEC TOKIN Hong Kong Ltd.
Level 3, Suite 301, Festival Walk, 80 Tat Chee Avenue, Kowloon Tong, Kowloon,
Hong Kong
Phone:852-2730-0028 Fax:852-2375-2508

NEC TOKIN Shanghai Co., Ltd.
Room 1508, Rui Jin Bldg., 205 Mao Ming Road (South), Shanghai 200020, P.R.China
Phone:86-21-6415-0602 Fax:86-21-6472-6655

NEC TOKIN Shenzhen Co., Ltd.
Room 512-515, Office Tower, Shin Hing Square, Di Wang Commercial Centre, Shenzhen,
P.R.China
Phone:86-755-246-5011 Fax:86-755-588-2680

NEC TOKIN Singapore Pte. Ltd.
180 Cecil Street, #14-01/04 Bangkok Bank Building, Singapore 069546
Phone:65-6223-7076 Fax:65-6223-6093

Malaysia Branch
Unit B-07-12, Block B, Plaza Mont' Kiara, 2, Jalan 1/ 70C, 50480 Kuala Lumpur, Malaysia
Phone:60-3-6201-0702 Fax:60-3-6201-0712

Bangkok Representative Office
No.1308, B.B.Bldg., 54 Asoke Road, Sukhumvit 21, Bangkok 10110, Thailand
Phone:66-2-260-7017 Fax:66-2-260-7016

NEC TOKIN Taiwan Co., Ltd.
4FL., No.9, Lane 3, Minsheng W. Road, Jungshan Chiu, Taipei 104, Taiwan, R.O.C.
Phone:886-2-2521-3998 Fax:886-2-2521-3993

NEC TOKIN Europe GmbH
Hellersbergstrasse. 14, 41460 Neuss, Germany
Phone:49-2131-1866-0 Fax:49-2131-1866-18

UK Branch
ECC Berkshire House, 252-256 Kings Road, Reading, Berkshire, RG1 4HP, U.K
Phone:44-(0)-118-953-3722/3723 Fax:44-(0)-118-953-3724

For inquiry, Please call Sales Promotion Department (Japan)
Phone: 81-3-3402-6179 Fax: 81-3-3402-6172

http://www.nec-tokin.com

0274SUCA16VOL02E September 00, 2002 H00P3
Printed in Japan