THIS DRAWING IS UNPUBLISHED. RELEASED FOR PUBLICATION - ,- .
© COPYRIGHT - By - ALL RIGHTS RESERVED.

LOC	DIST
GP	00

REVISIONS

P	LTR	DESCRIPTION	DATE	DWN	APVD
	G1	REVISED PER ECO-11-004835	11MAR11	RK	HMR

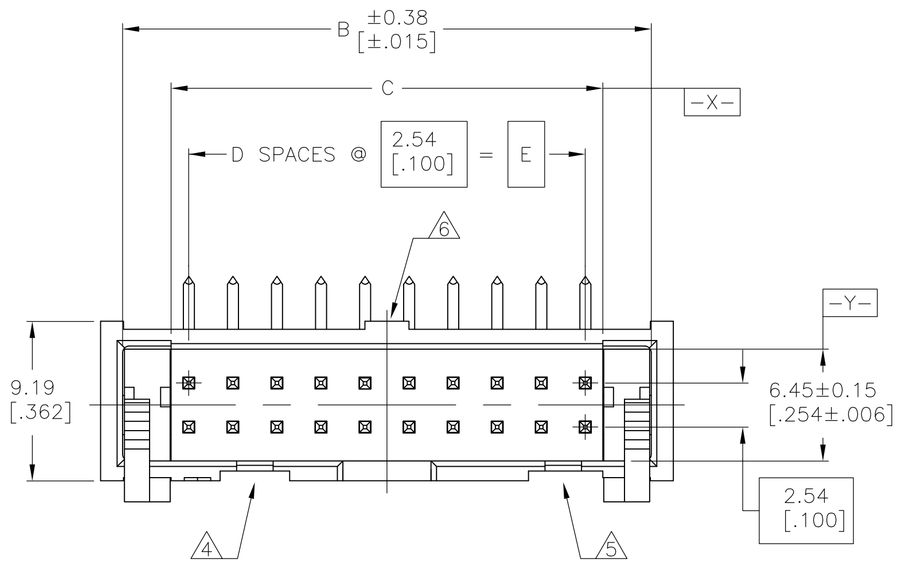

1. HOUSING: PBT, UL94V-0, COLOR (SEE TABLE).
   POSTS: PHOSPHOR BRONZE.
   LATCHES: ZINC ALLOY.
2. POSTS: GOLD FLASH OVER PALLADIUM-NICKEL PLATE, 0.76µm[.000030] MIN TOTAL ON MATING AREA, 2.54µm[.000100] MIN TIN PLATE ON SOLDER-TAIL, ALL OVER 1.27µm[.000050] MIN NICKEL UNDERPLATE ON ENTIRE POST.
   OR
   0.76µm[.000030] MIN GOLD PLATE ON MATING AREA, 2.54µm[.000100] MIN TIN PLATE ON THE SOLDER-TAIL, 1.27µm[.000050] MIN NICKEL UNDERPLATE ON THE ENTIRE POST.
   LATCHES: BLACK NICKEL OVER COPPER.
3. DATUMS S & T TO BE ESTABLISHED BY CUSTOMER.
4. NO KEYING SLOT ON THIS END FOR 6, 8, 10 & 14 POSITION ASSEMBLIES.
5. NO KEYING SLOT ON THIS END FOR 6, 8 & 10 POSITION ASSEMBLIES.
6. NO STANDOFF FOR 6, 8, 10, 14 & 16 POSITION ASSEMBLIES.
7. ALTERNATE LOCATION/ORIENTATON FOR POSITION #1 INDICATOR.

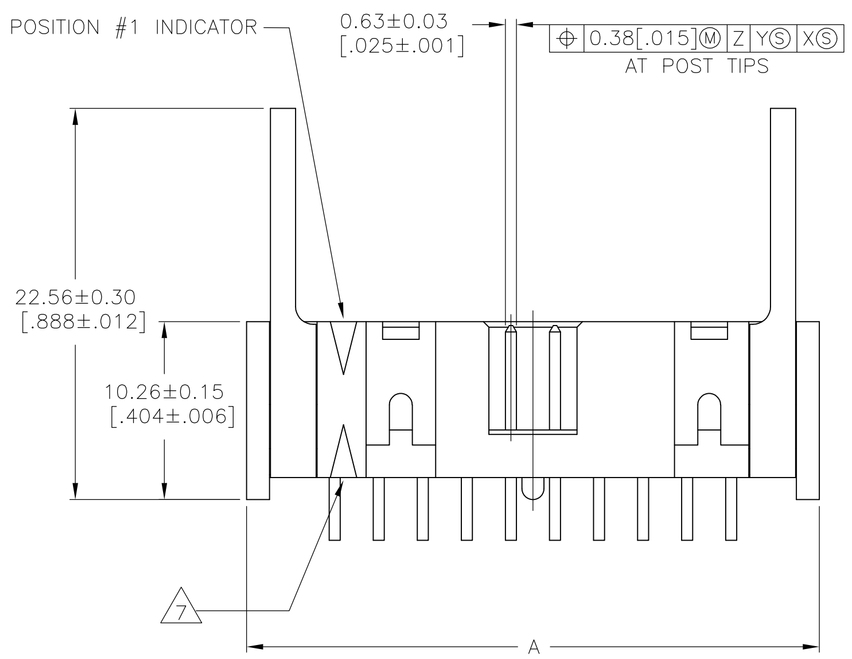

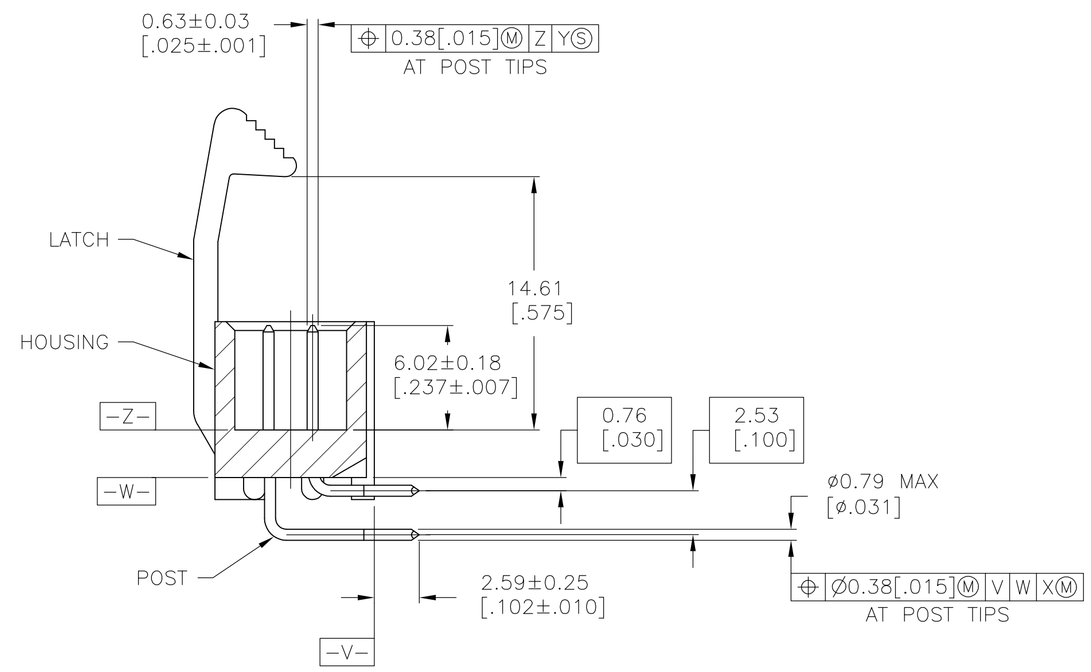

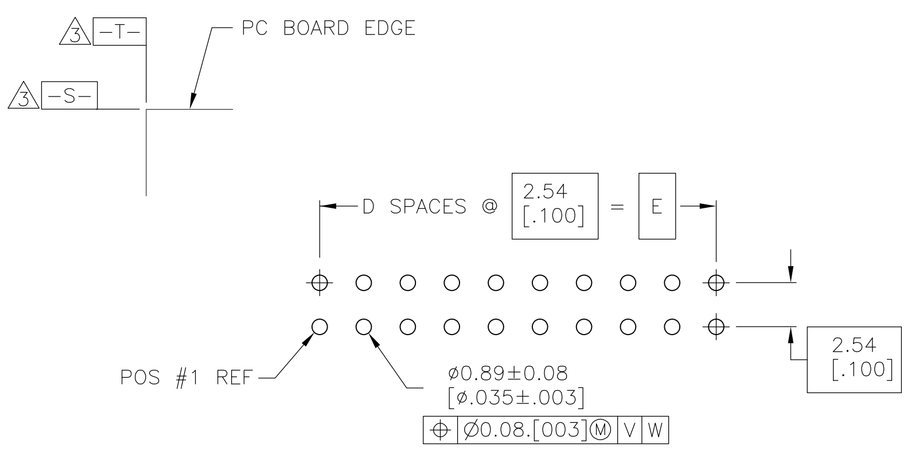

RECOMMENDED PC BOARD LAYOUT
(VIEWED FROM CONNECTOR SIDE)

	HOUSING COLOR	E	D	C	B	A	NO OF POS	PART NUMBER
	BLUE	78.74 [3.100]	31	80.77 [3.180]	86.26 [3.396]	88.90 [3.500]	64	3-1761607-7
	BLUE	73.66 [2.900]	29	75.69 [2.980]	81.18 [3.196]	83.82 [3.300]	60	3-1761607-6
	BLUE	60.96 [2.400]	24	62.99 [2.480]	68.48 [2.696]	71.12 [2.800]	50	3-1761607-5
	BLUE	48.26 [1.900]	19	50.29 [1.980]	55.78 [2.196]	58.42 [2.300]	40	3-1761607-3
	BLUE	40.64 [1.600]	16	42.67 [1.680]	48.16 [1.896]	50.80 [2.000]	34	3-1761607-1
OBSOLETE	BLUE	35.56 [1.400]	14	37.59 [1.480]	43.08 [1.696]	45.72 [1.800]	30	3-1761607-0
	BLUE	30.48 [1.200]	12	32.51 [1.280]	38.00 [1.496]	40.64 [1.600]	26	2-1761607-9
	BLUE	27.94 [1.100]	11	29.97 [1.180]	35.46 [1.396]	38.10 [1.500]	24	2-1761607-8
	BLUE	22.86 [.900]	9	24.89 [.980]	30.38 [1.196]	33.02 [1.300]	20	2-1761607-7
	BLUE	17.78 [.700]	7	19.81 [.780]	25.30 [.996]	27.94 [1.100]	16	2-1761607-6
	BLUE	15.24 [.600]	6	17.27 [.680]	22.76 [.896]	25.40 [1.000]	14	2-1761607-5
	BLUE	10.16 [.400]	4	12.19 [.480]	17.68 [.696]	20.32 [.800]	10	2-1761607-3
	BLUE	7.62 [.300]	3	9.65 [.380]	15.14 [.596]	17.78 [.700]	8	2-1761607-2
	BLUE	5.08 [.200]	2	7.11 [.280]	12.60 [.496]	15.24 [.600]	6	2-1761607-1
	BLACK	73.66 [2.900]	29	75.69 [2.980]	81.18 [3.196]	83.82 [3.300]	60	1-1761607-6
	BLACK	60.96 [2.400]	24	62.99 [2.480]	68.48 [2.696]	71.12 [2.800]	50	1-1761607-5
	BLACK	48.26 [1.900]	19	50.29 [1.980]	55.78 [2.196]	58.42 [2.300]	40	1-1761607-3
	BLACK	40.64 [1.600]	16	42.67 [1.680]	48.16 [1.896]	50.80 [2.000]	34	1-1761607-1
	BLACK	30.48 [1.200]	12	32.51 [1.280]	38.00 [1.496]	40.64 [1.600]	26	1761607-9
	BLACK	22.86 [.900]	9	24.89 [.980]	30.38 [1.196]	33.02 [1.300]	20	1761607-7
	BLACK	17.78 [.700]	7	19.81 [.780]	25.30 [.996]	27.94 [1.100]	16	1761607-6
	BLACK	15.24 [.600]	6	17.27 [.680]	22.76 [.896]	25.40 [1.000]	14	1761607-5
	BLACK	10.16 [.400]	4	12.19 [.480]	17.68 [.696]	20.32 [.800]	10	1761607-3

THIS DRAWING IS A CONTROLLED DOCUMENT.

DIMENSIONS: mm[INCHES]

TOLERANCES UNLESS OTHERWISE SPECIFIED:
0 PLC ± -
1 PLC ± -
2 PLC ± -
3 PLC ± 0.13[.005]
4 PLC ± -
ANGLES ± -

MATERIAL 1
FINISH 2

DWN J.GERACE 15FEB05
CHK S.BOLASH 15FEB05
APVD M.WALMSLEY 15FEB05
PRODUCT SPEC –
APPLICATION SPEC –
WEIGHT –

TE Connectivity

NAME HEADER ASSEMBLY, RIGHT ANGLE, LONG EJECT LATCH, LOW PROFILE, IDC
–

SIZE	CAGE CODE	DRAWING NO	RESTRICTED TO
A1	00779	C-1761607	–

CUSTOMER DRAWING | SCALE 4:1 | SHEET 1 OF 1 | REV G1

4805 (3/11)