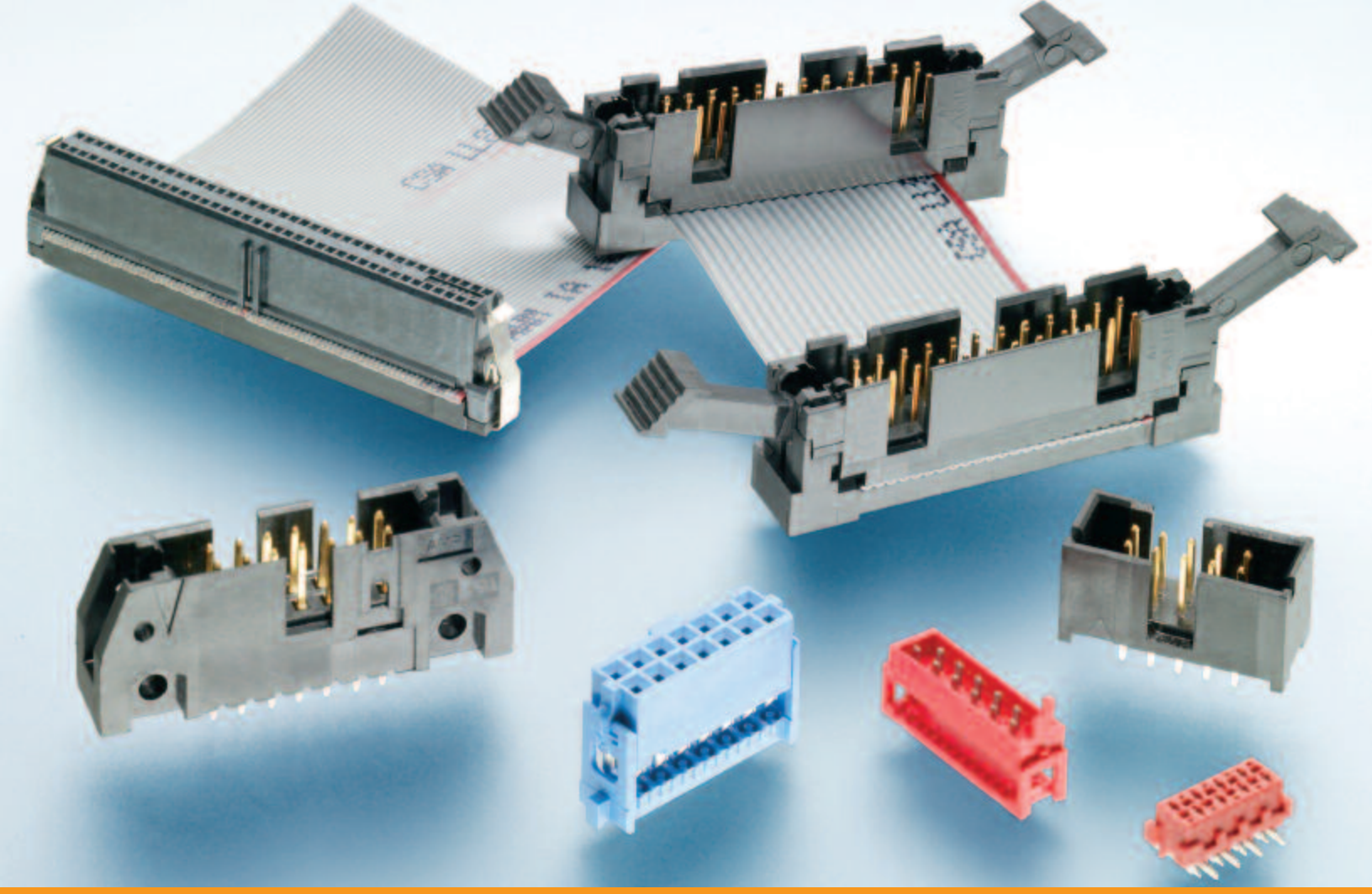

Ribbon Cable Interconnect Solutions

RoHS Ready

TE connectivity

Ribbon Cable Connector Selection Guide

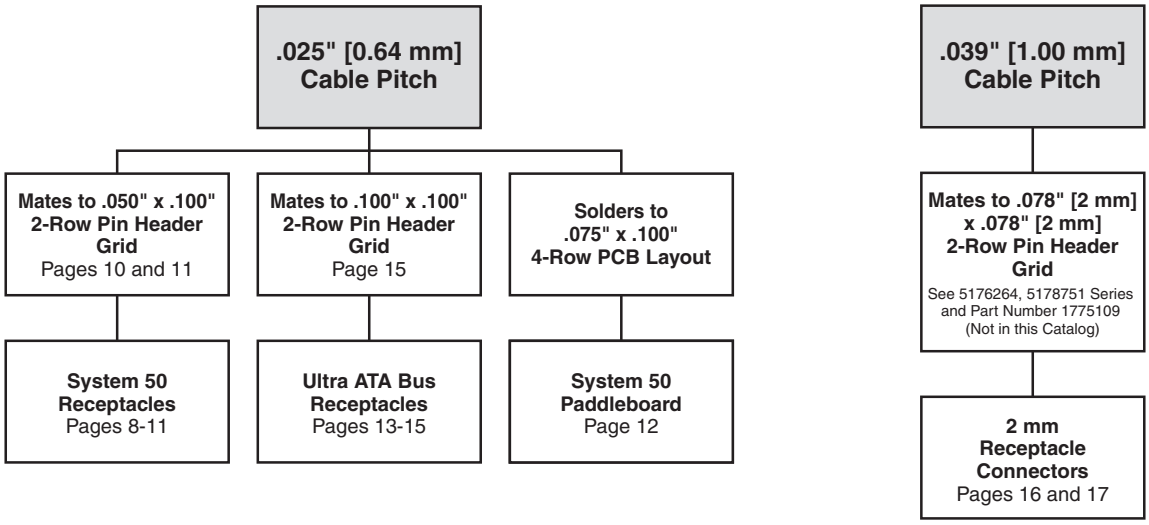

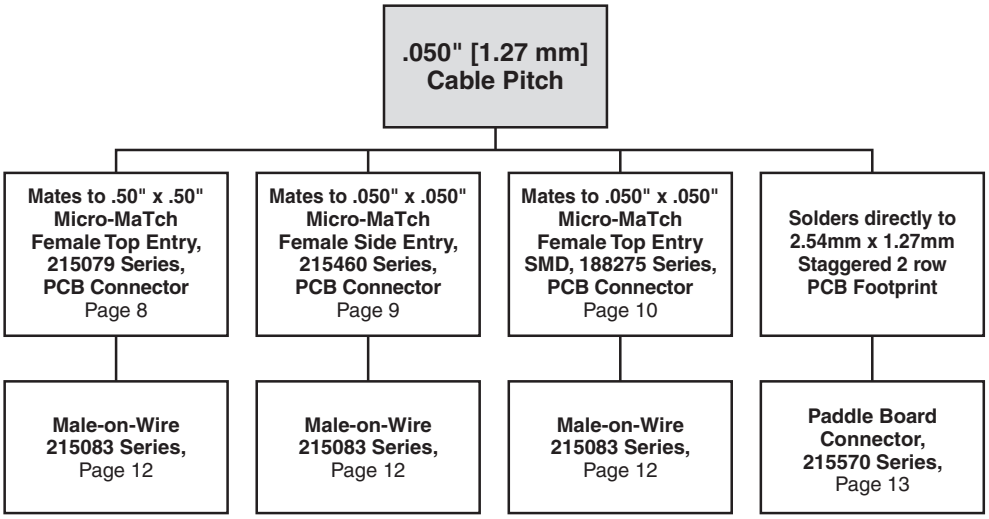

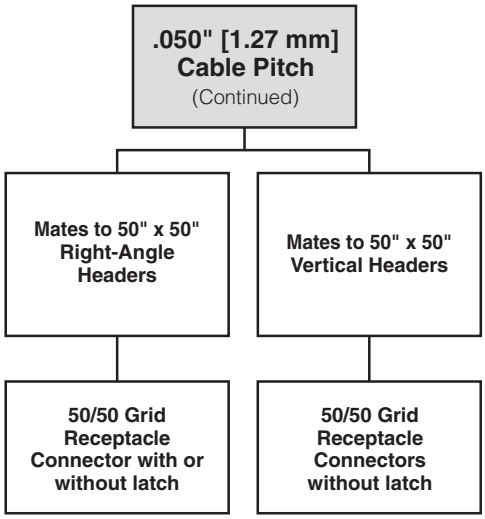

Catalog 82012
Revised 4-12

www.te.com

Dimensions are shown for reference purposes only. Specifications subject to change.

Dimensions are in inches and millimeters unless otherwise specified.
USA: +1 (800) 522-6752

Canada: +1 (905) 475-6222
Mexico/C. Am.: +52 (0) 55-1106-0800
Latin/S. Am.: +54 (0) 11-4733-2200
Germany: +49 (0) 6251-133-1999

UK: +44 (0) 800-267666
France: +33 (0) 1-3420-8686
Netherlands: +31 (0) 73-6246-999
China: +86 (0) 400-820-6015

Ribbon Cable Connector Selection Guide (Continued)

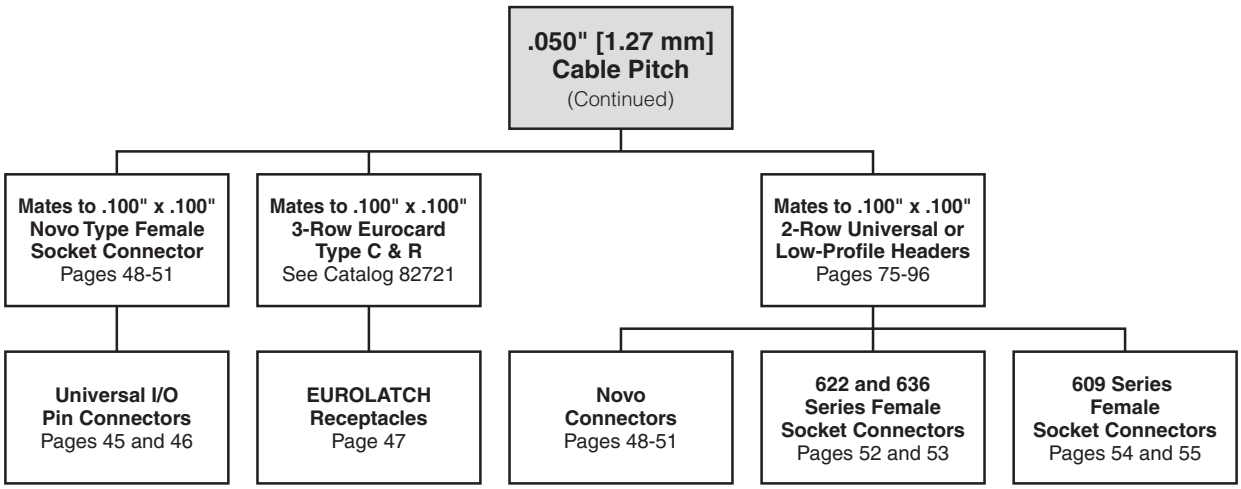

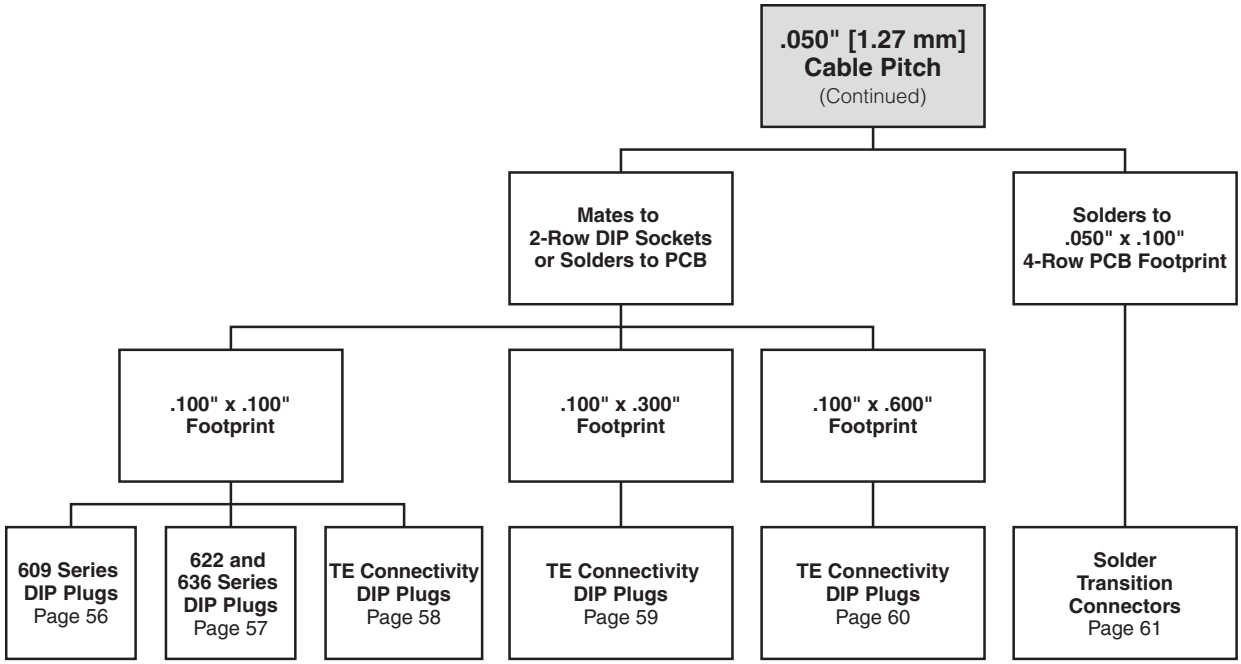

Catalog 82012
Revised 4-12

www.te.com

Dimensions are shown for reference purposes only. Specifications subject to change.

Dimensions are in inches and millimeters unless otherwise specified.
USA: +1 (800) 522-6752

Canada: +1 (905) 475-6222
Mexico/C. Am.: +52 (0) 55-1106-0800
Latin/S. Am.: +54 (0) 11-4733-2200
Germany: +49 (0) 6251-133-1999

UK: +44 (0) 800-267666
France: +33 (0) 1-3420-8686
Netherlands: +31 (0) 73-6246-999
China: +86 (0) 400-820-6015

Introduction

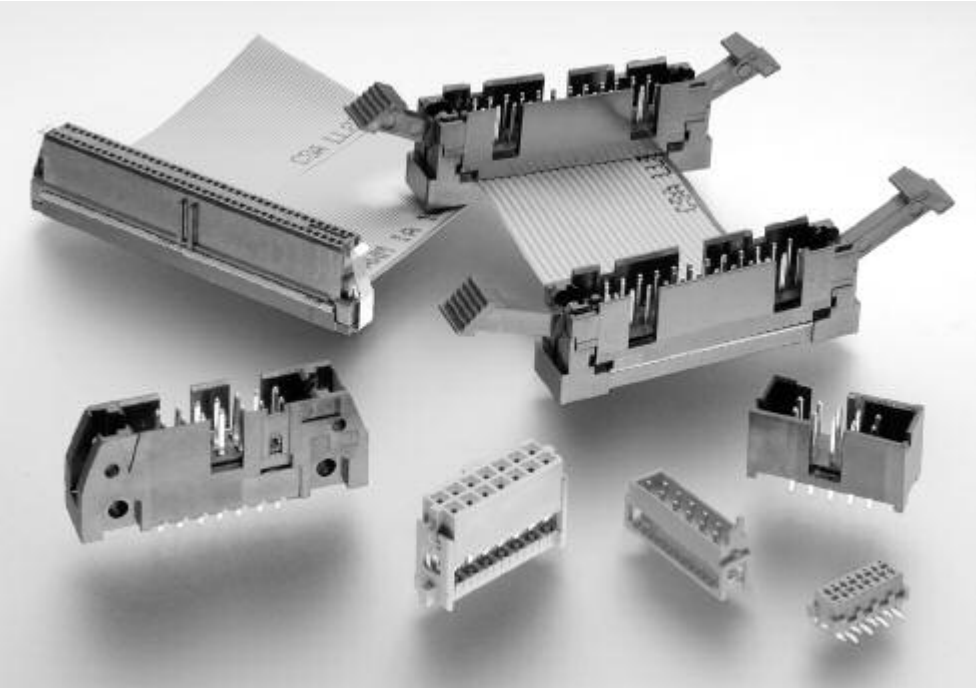

Disclaimer

While TE has made every reasonable effort to ensure the accuracy of the information in this catalog, TE does not guarantee that it is error-free, nor does TE make any other representation, warranty or guarantee that the information is accurate, correct, reliable or current. TE reserves the right to make any adjustments to the information contained herein at any time without notice. TE expressly disclaims all implied warranties regarding the information contained herein, including, but not limited to, any implied warranties of merchantability or fitness for a particular purpose. The dimensions in this catalog are for reference purposes only and are subject to change without notice. Specifications are subject to change without notice. Consult TE for the latest dimensions and design specifications.

© 2012, 2009, 1999, 1998, 1996, 1995, 1993, 1992, 1989, 1988, 1986, 1985, 1983, 1982, 1977, 1976, 1974 and 1973 Tyco Electronics Corporation. All Rights Reserved.

AMP, AMPLIMITE, AMPMODU, CHAMP, EUROLATCH, TE Connectivity and the TE connectivity (logo) are trademarks of the TE Connectivity Ltd. family of companies.

Other logos, product and Company names mentioned herein may be trademarks of their respective owners.

Restriction on the use of Hazardous Substances (RoHS)

At TE Connectivity, we're ready to support your RoHS requirements. We've assessed more than 1.5 million end items/components for RoHS compliance, and issued new part numbers where any change was required to eliminate the restricted materials. Part numbers in this catalog are identified as:

RoHS Compliant — Part numbers in this catalog are RoHS Compliant, unless marked otherwise. These products comply with European Union Directive 2002/95/EC as amended 1 January 2006 that restricts the use of lead, mercury, cadmium, hexavalent chromium, PBB, and PBDE in certain electrical and electronic products sold into the EU as of 1 July 2006.

NOTE: For purposes of this Catalog, included within the definition of RoHS Compliant are products that are clearly "Out of Scope" of the RoHS Directive such as hand tools and other non-electrical accessories.

NOTE: Information regarding RoHS compliance is provided based on reasonable inquiry of our suppliers and represents our current actual knowledge based on the information provided by our suppliers. This information is subject to change. For latest compliance status, refer to our website referenced at right.

Getting the Information You Need

Our comprehensive on-line RoHS Customer Support Center provides a forum to answer your questions and support your RoHS needs. A RoHS FAQ (Frequently Asked Questions) is available with links to more detailed information. You can also submit RoHS questions and receive a response within 24 hours during a normal work week. The Support Center also provides:

- Cross-Reference from Non-compliant to Compliant Products
- Ability to browse RoHS Compliant Products in our on-line catalog
- Downloadable Technical Data Customer Information Presentation
- More detailed information regarding the definitions used above
- So whatever your questions when it comes to RoHS, we have the answers at www.te.com/leadfree

RoHS Customer Support Center

Dimensions are shown for reference purposes only. Specifications subject to change.

Dimensions are in inches and millimeters unless otherwise specified.

USA: +1 (800) 522-6752
Canada: +1 (905) 475-6222
Mexico/C. Am.: +52 (0) 55-1106-0800
Latin/S. Am.: +54 (0) 11-4733-2200
Germany: +49 (0) 6251-133-1999
UK: +44 (0) 800-267666
France: +33 (0) 1-3420-8686
Netherlands: +31 (0) 73-6246-999
China: +86 (0) 400-820-6015

Introduction (Continued)

Mass termination capabilities of the ribbon cable connectors have helped make ribbon cable, and particularly .050 [0.127] centerline cable, popular within the Electronics Industry. The ability to terminate up to 64 conductors simultaneously, without stripping or otherwise preparing the cable, presents obvious labor savings.

Ribbon Cable Connectors are wire-to-board devices used to make the transition between cable and pc board circuitry. They find heavy use within equipment to connect one board to another or one subsystem to another. The connectors are also used in input/output applications, connecting different pieces of equipment.

Ribbon Cable Solutions are available on three separate cable centerline spacings. They include:

.025 [0.64] Centerlines
- System 50 receptacles
- System 50 paddleboards
- Pin headers

.039 [1.00] Centerlines
- 2.0 mm receptacles
- Breakaway pin headers

.050 [1.27] Centerlines
- 50/50 Grid connectors
- Micro-MaTch connectors
- Novo Receptacle connectors
- DIP plugs
- EUROLATCH receptacle connectors per DIN 41612 and IEC 603-2
- Pin Headers

System 50 ribbon cable receptacles will terminate cable on .025 [0.64] centerlines. They are available in select sizes from 20 thru 100-positions, and accept wire size range 30 AWG [0.05 mm^2] solid or stranded wire and 32 AWG [0.03 mm^2] stranded pvc insulated wire. Housing and cover are made of high temperature tolerant thermoplastic material, black, UL 94V-0 rated. A single mating beam, phosphor bronze contact provides the interconnect between the conductor and the $.015^2$ [0.38^2] posts on .050 x .100 [1.27 x 2.54] grid. Also available in paddleboard configurations.

2.0 mm [.079] ribbon cable receptacles feature contacts on a true 2.0 mm [.079 in.] mating grid for 1.0 mm [.039 in.] pitch ribbon cable. Select configurations are available between 8 and 50-positions. Receptacles feature insulation displacement contacts (IDC).

50/50 Grid connectors Although AMPMODU 50/50 Grid Vertical Headers and Receptacles are designed for parallel board-to-board stacking in high density applications, Right-angle board-to-board and cable-to-board applications are also possible since the vertical receptacles also mate with non-latching right-angle headers and the vertical headers also mate with non-latching cable connectors.

Micro-Match connectors Miniaturization and the trend towards higher density of electronic functions on a substrate led to the introduction of Micro-MaTch. The system offers a range of board and wire connectors, enabling a variety of wire-to-board and board-to-board interconnections. Its design prevents the traditional failure mode in tin-plated connections, fretting corrosion. An additional positioning spring in the female part absorbs relative movements caused by vibrations and thermal expansion between male and female contacts. By preventing movements on the contact spot, a gas tight connection can be guaranteed under all circumstances.

Novo receptacles feature two rows of contacts on .100 x .100 [2.54 x 2.54] centers on selected sizes of 10 thru 64-positions and mate with .025 [0.64] square or round posts. The Novo tuning-fork contact offers a military-approved design, at an affordable cost. Polarization options include military, center and military, or dual bar.

DIP (Dual In-Line Package) plugs provide a permanent connection of ribbon cable to a pc board or mating to DIP sockets. Using the same centerline dimensions as DIP integrated circuits, DIP plugs offer space efficiency and a low profile of .253 [6.43].

Need more information?

Call Technical Support at the numbers listed below.

Technical Support is staffed with specialists well versed in all TE products. They can provide you with:
- Technical Support
- Catalogs
- Technical Documents
- Product Samples
- TE Authorized Distributor Locations

Dimensions are shown for reference purposes only. Specifications subject to change.

Dimensions are in inches and millimeters unless otherwise specified.

USA: +1 (800) 522-6752
Canada: +1 (905) 475-6222
Mexico/C. Am.: +52 (0) 55-1106-0800
Latin/S. Am.: +54 (0) 11-4733-2200
Germany: +49 (0) 6251-133-1999
UK: +44 (0) 800-267666
France: +33 (0) 1-3420-8686
Netherlands: +31 (0) 73-6246-999
China: +86 (0) 400-820-6015

Table of Contents

Ribbon Cable Connector Selection Guide 2, 3

.025 [0.64] Centerline Ribbon Cable Connectors
System 50 Connectors 8-12
Cable-to-Board Connectors 8, 9, 12
Board-to-Board Connectors 10, 11
Ultra ATA Bus Connectors 13-15

.039 [1.00] Centerline Ribbon Cable Connectors
2 mm [.079] Receptacle Connectors 16, 17

AMPMODU 50/50 Grid Connector System
Introduction 18
Board-to-Board Vertical Receptacles and Headers 19
Board-to-Board Vertical Receptacles, Double Row, .050 x .050 [1.27 x 1.27] Centers 20
Board-to-Board Vertical Headers, Double Row, .050 x .050 [1.27 x 1.27] Centers . . . 21
Recommended PC Board Layouts for Vertical Connectors 22
Board-to-Board Right-Angle Headers 23
Board-to-Board Right-Angle Headers, Double Row, .050 x .050 [1.27 x 1.27] Centers 24
Cable-to-Board Connectors 25
Cable-to-Board Receptacle Connectors, Double Row, .050 x .050 [1.27 x 1.27] Centers 26
Terminating Covers for Cable Connectors 27
Application Tooling for Cable Connectors 28
Performance Specifications 29
Technical Documents 29

Micro-MaTch Connector System
Miniature Connector System 30
System Overview/Technical Data 31
Applications (3 Dimensions) 32
Applications (2 Dimensions) 33
Female-on-Board Connector, Top Entry 34
Female-on-Board Connector, Side Entry 35
Female-on-Board Connector Surface Mount Device (SMD) 36
Male-on-Board Connector 37
Male-on-Wire Connector 38
Paddle Board Connector 39
Crimp On Snap In (COSI) Connector 40
Specials 41
Application Tooling 42, 43
Lead Assembly and Sample Box 44

.050 [1.27] Centerline Ribbon Cable Connectors
Universal I/O Pin Connectors without Mounting Ears 45
Universal I/O Pin Connectors with Slotted Mounting Ears 46
EUROLATCH Receptacles 64-Position (Three-Row Housings, Two Rows Loaded) 47
Novo Connectors 48-51
Military Polarized, .100 x .100 [2.54 x 2.54] Centers 49
Center and Military Polarized, .100 x .100 [2.54 x 2.54] Centers 50
Dual Polarized, .100 x .100 [2.54 x 2.54] Centers 51
Female Socket Connectors, .100 x .100 [2.54 x 2.54] Centers, 622 and 636 Series . . . 52, 53
Female Socket Connectors, .100 x .100 [2.54 x 2.54] Centers, 609 Series 54, 55
DIP Plugs, .100 x .100 [2.54 x 2.54] Centers, 609 Series 56
DIP Plugs, .100 x .100 [2.54 x 2.54] Centers, 622 Series 57

Dimensions are shown for reference purposes only. Specifications subject to change.

Dimensions are in inches and millimeters unless otherwise specified.
USA: +1 (800) 522-6752

Canada: +1 (905) 475-6222
Mexico/C. Am.: +52 (0) 55-1106-0800
Latin/S. Am.: +54 (0) 11-4733-2200
Germany: +49 (0) 6251-133-1999

UK: +44 (0) 800-267666
France: +33 (0) 1-3420-8686
Netherlands: +31 (0) 73-6246-999
China: +86 (0) 400-820-6015

Table of Contents (Continued)

.050 [1.27] Centerline Ribbon Cable Connectors (Continued)
DIP Plugs, .100 x .100 [2.54 x 2.54] Centers 58
DIP Plugs, .100 x .300 [2.54 x 7.62] Centers 59
DIP Plugs, .100 x .600 [2.54 x 15.24] Centers 60
4-Row PCB Solder Transition Connectors 61
1-Row Horizontal Receptacle 62

Accessories
Flexible Pull Tabs 63
Universal I/O Latches 63
Military Polarizers 63
Keying Plugs 64
Strain Relief for 622 Series DIP Plugs 65
Pull Loops, Permanent (For Receptacles and Pin Connectors) 66
Strain Relief for Universal I/O without Mounting Ears 67
Strain Relief for 609 Series (Tulip Contact) Female Socket Connectors 67
Strain Relief for Novo and Ultra ATA 68
Strain Relief for 2 mm 68
Strain Relief for 622 and 636 Series Female Socket Connectors 69

Application Tooling 70-74

Low Profile Headers 75-83
Low Profile Pin Headers, Center and Dual Polarized, .100 x .100 [2.54 x 2.54] Centerlines 76, 77
Low Profile Pin Headers, Center and Dual Polarized, .100 x .100 [2.54 x 2.54] Centerlines and “Kinked” Solder Tails for PCB Retention 78, 79
IDC Low Profile Ejection Style Pin Headers with Die Cast Ejection Latches, Military and Center Polarized, .100 x .100 [2.54 x 2.54] Centerlines 80, 81
IDC Low Profile Ejection Style Pin Headers, Center Polarized, .100 x .100 [2.54 x 2.54] Centerlines 82, 83

Universal Ejection Style Pin Headers and Pinless Headers
Universal Ejection Style Pin Headers, Military, Center and Dual Polarized, .100 x .100 [2.54 x 2.54] Centerlines 84-86
Universal Ejection Style Pin Headers, ACTION PIN Contacts, Military, Center and Dual Polarized, .100 x .100 [2.54 x 2.54] Centerlines 87, 88
Universal Ejection Style Pin Headers, Military, Center and Dual Polarized, .100 x .100 [2.54 x 2.54] Centerlines, Right-Angle 89-91
Universal Ejection Style Pinless Headers, Military, Center and Dual Polarized, .100 x .100 [2.54 x 2.54] Centerlines 92, 93
Universal Ejection Style Pin Headers, with PCT Housing, .100 x .100 [2.54 x 2.54] Centerlines, .025 [0.64] Sq. Posts (Mating End) 94, 95
Latches for Ejection Style Universal Pin Headers and Pinless Headers 96

Cable Solutions 97, 98

Part Number Index 99

Catalog 82012
Revised 4-12

www.te.com

Dimensions are shown for reference purposes only. Specifications subject to change.

Dimensions are in inches and millimeters unless otherwise specified.
USA: +1 (800) 522-6752

Canada: +1 (905) 475-6222
Mexico/C. Am.: +52 (0) 55-1106-0800
Latin/S. Am.: +54 (0) 11-4733-2200
Germany: +49 (0) 6251-133-1999

UK: +44 (0) 800-267666
France: +33 (0) 1-3420-8686
Netherlands: +31 (0) 73-6246-999
China: +86 (0) 400-820-6015

System 50 Cable-to-Board Connectors, .025 [0.64] Centerline Ribbon Cable

Product Facts

- **Preassembled housing and cover**
- **One-step termination**
- **End and daisy chain termination**
- **Positive end latching of connector to universal header**
- **Terminates 30 AWG [0.05 mm²] solid or stranded and 32 AWG [0.03 mm²] stranded .025 [0.64] centerline ribbon cable with PVC insulation**
- **Connectors are RoHS compliant**
- **Recognized under the Component Program of the Underwriters Laboratories, Inc. UL File No. E28476**
- **Certified by the Canadian Standards Association, File No. LR 7189**

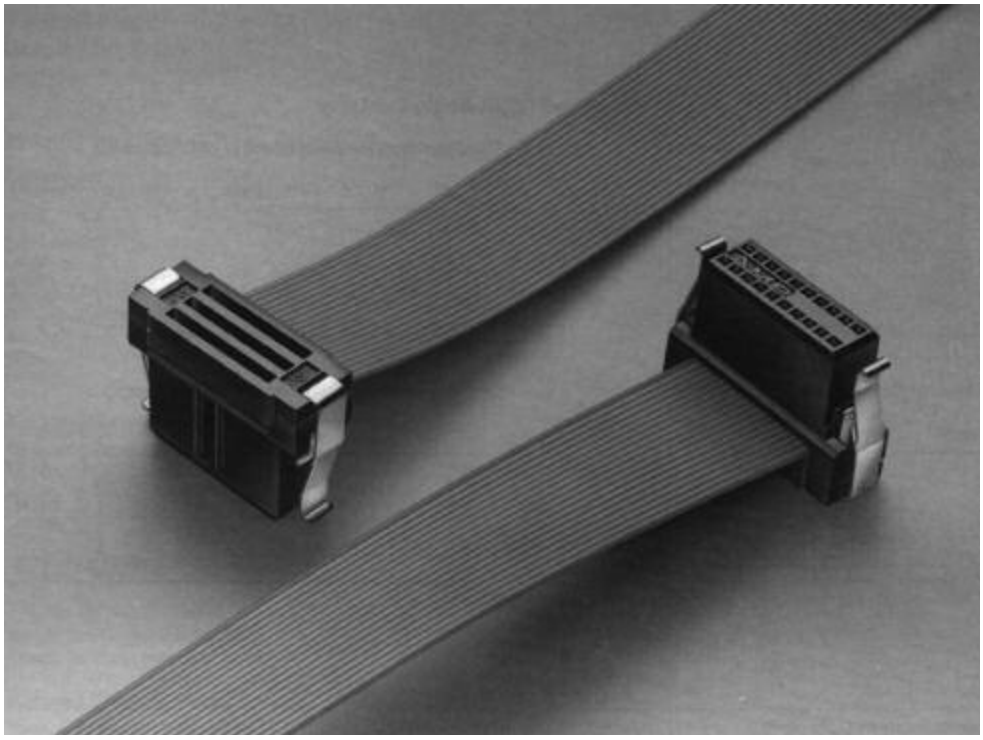

The System 50 Ribbon Cable connector is a receptacle connector that will terminate ribbon cable on .025 [0.64] centerlines. It is available in select sizes from 10 to 100 positions and will accommodate 30 AWG [0.05 mm²] solid or stranded and 32 AWG [0.03 mm²] stranded conductors with PVC cable insulation.

The housing and cover are of a high temperature tolerant thermoplastic (black) with a UL 94V-0 rating. A phosphor bronze single mating beam contact provides the interconnect between the conductor and the .015 [0.38] square posts on the .050 x .100 [1.27 x 2.54] grid. The contacts are plated with 30 gold duplex plating. The latching feature is located on the receptacle, not the header, and saves board space and eliminates future problems of “latch height compatibility.”

Catalog 82012
Revised 4-12

www.te.com

Dimensions are shown for reference purposes only. Specifications subject to change.

Dimensions are in inches and millimeters unless otherwise specified.
USA: +1 (800) 522-6752

Canada: +1 (905) 475-6222
Mexico/C. Am.: +52 (0) 55-1106-0800
Latin/S. Am.: +54 (0) 11-4733-2200
Germany: +49 (0) 6251-133-1999

UK: +44 (0) 800-267666
France: +33 (0) 1-3420-8686
Netherlands: +31 (0) 73-6246-999
China: +86 (0) 400-820-6015

System 50 Cable-to-Board Connectors, .025 [0.64] Centerline Ribbon Cable (Continued)

Double Row Receptacle

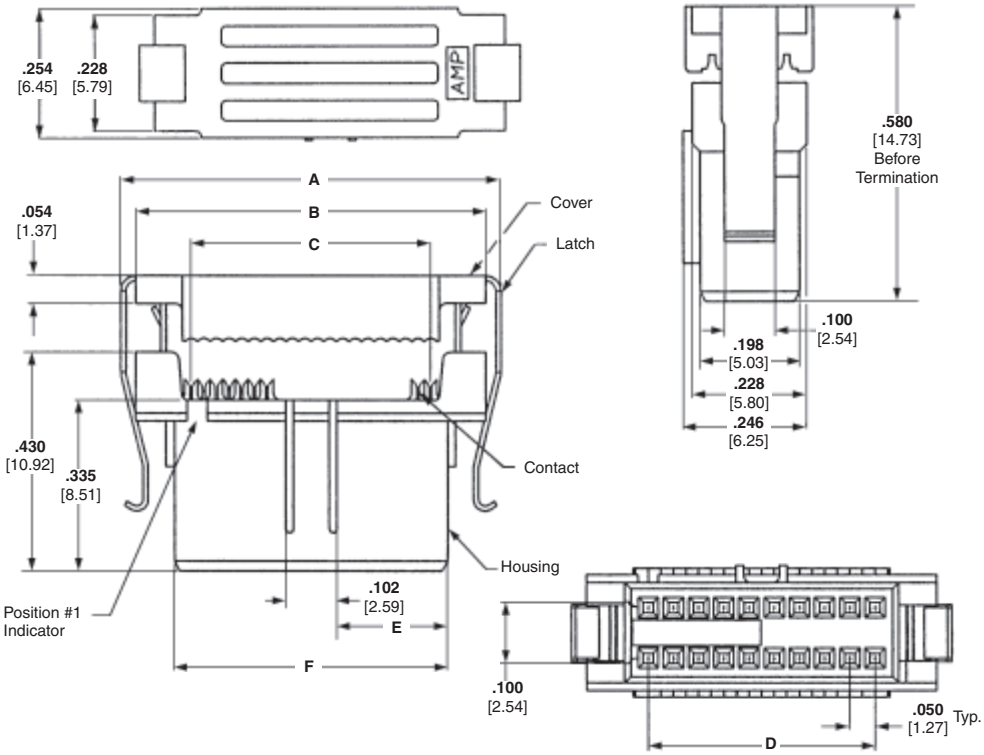

Material and Finish

Housing — Black thermoplastic, UL 94V-0 rated

Latches — Stainless steel

Contacts — Phosphor bronze, plated 30 microinch gold over nickel with tin in termination area

Related Product Data

Mateable Connectors —
See AMP Catalog 82178
See Part Numbers 104068 and 104069 Series on pages 10 and 11

Mates with Posts — .015 [0.38] square, .125 [3.18] long, on .050 x .100 [1.27 x 2.54] grid

Technical Documents

Product Specification
108-1109

Application Specification
114-25029

No. of Pos.	Dimensions						Part Number
	A	B	C	D	E	F	
10	**.510** 12.95	**.445** 11.30	**.225** 5.72	**.200** 5.08	**.096** 2.44	**.294** 7.47	2-111196-5
14	**.610** 15.49	**.545** 13.84	**.325** 8.26	**.300** 7.62	**.146** 3.71	**.394** 10.01	2-111196-6
16	**.660** 16.76	**.595** 15.11	**.375** 9.52	**.350** 8.89	**.171** 4.34	**.444** 11.28	2-111196-7
20	**.760** 19.30	**.695** 17.65	**.475** 12.07	**.450** 11.43	**.221** 5.61	**.544** 13.82	1-111196-8
24	**.860** 20.32	**.795** 20.19	**.575** 14.61	**.550** 13.97	**.271** 6.88	**.644** 16.36	2-111196-8
26	**.910** 23.11	**.845** 21.46	**.625** 15.88	**.600** 15.24	**.296** 7.52	**.694** 17.63	2-111196-9
30	**1.010** 25.65	**.945** 24.00	**.725** 18.42	**.700** 17.78	**.346** 8.79	**.794** 20.17	1-111196-9
34	**1.110** 28.19	**1.045** 26.54	**.825** 20.96	**.800** 20.32	**.396** 10.06	**.894** 22.71	3-111196-0
40	**1.260** 32.00	**1.195** 30.35	**.975** 34.54	**.950** 24.13	**.471** 11.96	**1.044** 26.52	2-111196-0
44	**1.360** 34.54	**1.295** 32.89	**1.075** 27.31	**1.050** 26.67	**.521** 13.23	**1.144** 29.06	3-111196-1
50	**1.510** 38.35	**1.445** 36.70	**1.225** 31.12	**1.200** 30.48	**.596** 15.14	**1.294** 32.87	2-111196-1
60	**1.760** 44.70	**1.695** 43.05	**1.475** 37.47	**1.450** 36.83	**.721** 18.31	**1.544** 39.22	2-111196-2
64	**1.860** 47.24	**1.795** 45.59	**1.575** 40.00	**1.550** 39.37	**.771** 19.58	**1.644** 41.76	3-111196-2
68	**1.960** 49.78	**1.895** 48.13	**1.675** 42.55	**1.650** 41.91	**.821** 20.85	**1.744** 44.30	3-111196-4
72	**2.060** 52.32	**1.995** 50.67	**1.775** 45.08	**1.750** 44.45	**.871** 22.12	**1.844** 46.84	2-111196-3
80	**2.260** 57.40	**2.195** 55.75	**1.975** 50.17	**1.950** 49.53	**.971** 24.66	**2.044** 51.92	3-111196-3
100	**2.760** 70.10	**2.695** 68.45	**2.475** 62.87	**2.450** 62.23	**1.221** 31.01	**2.544** 64.62	2-111196-4

See Application Specification for termination tooling.
Note: All part numbers are RoHS compliant.

Dimensions are shown for reference purposes only. Specifications subject to change.

Dimensions are in inches and millimeters unless otherwise specified.
USA: +1 (800) 522-6752

Canada: +1 (905) 475-6222
Mexico/C. Am.: +52 (0) 55-1106-0800
Latin/S. Am.: +54 (0) 11-4733-2200
Germany: +49 (0) 6251-133-1999

UK: +44 (0) 800-267666
France: +33 (0) 1-3420-8686
Netherlands: +31 (0) 73-6246-999
China: +86 (0) 400-820-6015

System 50 Board-to-Board Connectors, Through-Hole Headers

Shrouded, Double Row Vertical

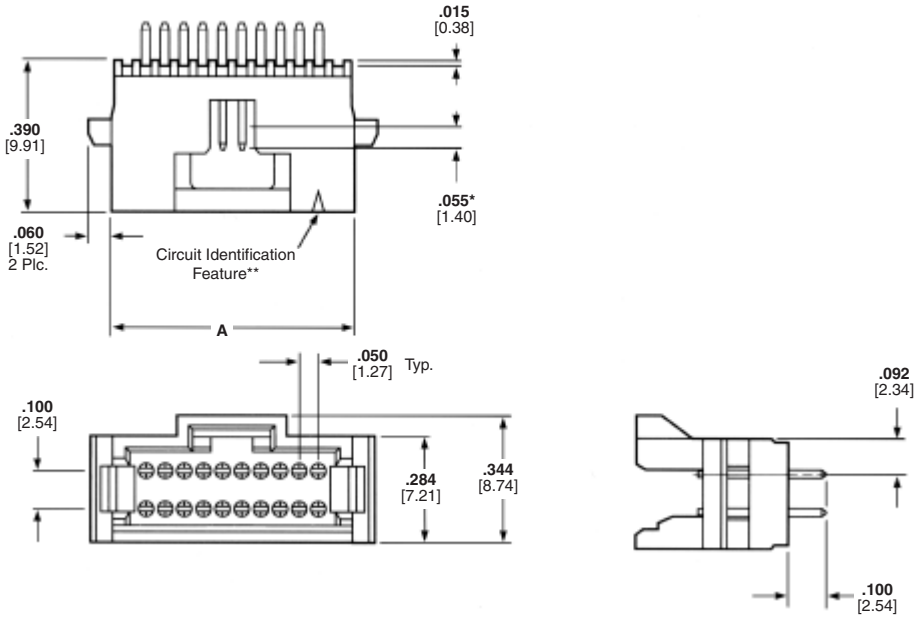

Material and Finish

Housing — Black thermoplastic, UL 94V-0 rated

Contacts — Copper alloy, plated .000030 [0.00076] gold in mating area, .000150 [0.00381] tin on solder posts, with entire contact underplated .000050 [0.00127] nickel

Related Product Data

Mateable Receptacles — page 9

Technical Documents

Product Specification
108-1093

Application Specification
114-25031

No. of Positions	Dim. A	Part Number
10	**.380** 9.65	5-104068-2
12	**.430** 10.92	5-104068-8
14	**.480** 12.19	5-104068-9
16	**.530** 13.46	6-104068-0
20	**.630** 16.00	5-104068-1
24	**.730** 18.54	6-104068-1
26	**.780** 19.81	6-104068-2
30	**.880** 22.35	5-104068-3

No. of Positions	Dim. A	Part Number
34	**.980** 24.89	6-104068-3
40	**1.130** 28.70	5-104068-4
44	**1.230** 31.24	6-104068-4
50	**1.380** 35.05	5-104068-5
60	**1.630** 41.40	5-104068-6
68	**1.830** 46.48	6-104068-8
72	**1.930** 49.02	6-104068-5
80	**2.130** 54.10	6-104068-6
100	**2.630** 66.80	6-104068-7

*Point of measurement for gold thickness.
**Circuit identification feature omitted on 8, 10, 12 and 14 position headers.

Note: All part numbers are RoHS compliant.

Dimensions are shown for reference purposes only. Specifications subject to change.

Dimensions are in inches and millimeters unless otherwise specified.
USA: +1 (800) 522-6752

Canada: +1 (905) 475-6222
Mexico/C. Am.: +52 (0) 55-1106-0800
Latin/S. Am.: +54 (0) 11-4733-2200
Germany: +49 (0) 6251-133-1999

UK: +44 (0) 800-267666
France: +33 (0) 1-3420-8686
Netherlands: +31 (0) 73-6246-999
China: +86 (0) 400-820-6015

System 50 Board-to-Board Connectors, Through-Hole Headers (Continued)

Shrouded, Double Row Right-Angle

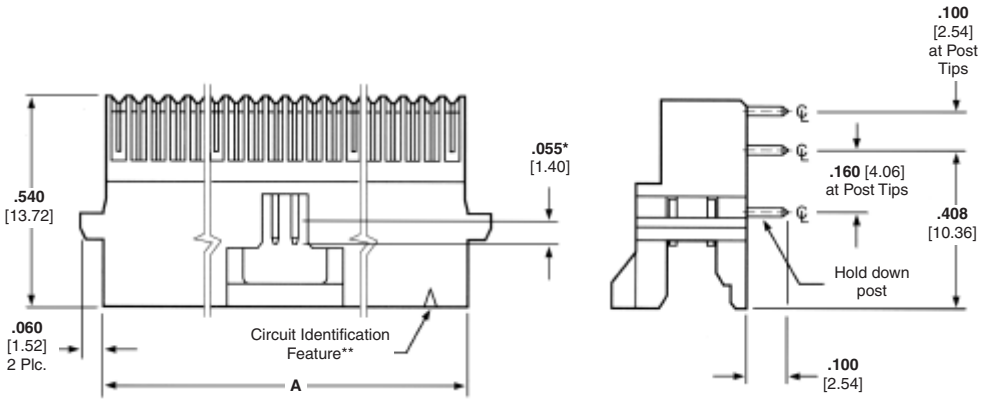

Material and Finish

Housing — Black thermoplastic, UL 94V-0 rated

Contacts — Copper alloy, plated .000030 [0.00076] gold in mating area, .000150 [0.00381] tin on solder posts, with entire contact underplated .000050 [0.00127] nickel

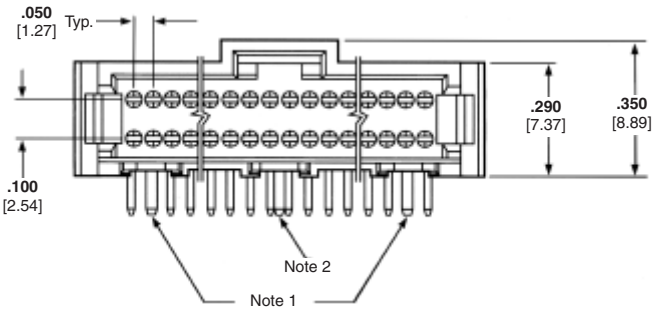

Related Product Data

Mateable Receptacles — page 9

Technical Documents

Product Specification
108-1093

Application Specification
114-25031

No. of Positions	Dim. A	Part Number
8	**.330** 8.38	5-104069-8
10	**.380** 9.65	5-104069-4
20	**.630** 16.00	5-104069-1
24	**.730** 18.54	6-104069-2
26	**.780** 19.81	6-104069-3
30	**.880** 22.35	5-104069-5
34	**.980** 24.89	6-104069-4

No. of Positions	Dim. A	Part Number
40	**1.130** 28.70	5-104069-6
50	**1.380** 35.05	5-104069-2
60	**1.630** 41.40	5-104069-7
68	**1.830** 46.80	6-104069-8
72	**1.930** 49.02	6-104069-6
80	**2.130** 54.10	5-104069-3
100	**2.630** 66.80	6-104069-7

*Point of measurement for gold thickness.
**Circuit identification feature omitted on 8, 10, 12 and 14 position headers.

Notes: 1. Hold down posts located as shown for 16 through 100 position headers.
2. Hold down posts located as shown for 8 through 14 and 60 through 100 position headers.
3. All part numbers are RoHS compliant.

Dimensions are shown for reference purposes only. Specifications subject to change.

Dimensions are in inches and millimeters unless otherwise specified.
USA: +1 (800) 522-6752

Canada: +1 (905) 475-6222
Mexico/C. Am.: +52 (0) 55-1106-0800
Latin/S. Am.: +54 (0) 11-4733-2200
Germany: +49 (0) 6251-133-1999

UK: +44 (0) 800-267666
France: +33 (0) 1-3420-8686
Netherlands: +31 (0) 73-6246-999
China: +86 (0) 400-820-6015

System 50 Cable-to-Board Connectors, .025 [0.64] Centerline Ribbon Cable

Paddleboard

Material and Finish

Housing — LCP thermoplastic, UL 94V-0 rated, black

Cover — Polyester, UL 94V-0 rated, black

Contacts — Phosphor bronze, plated .000100 [0.00245] min. tin over .000050 [0.00127] min. nickel underplating

Technical Documents

Product Specification
108-1109

Application Specification
114-25040

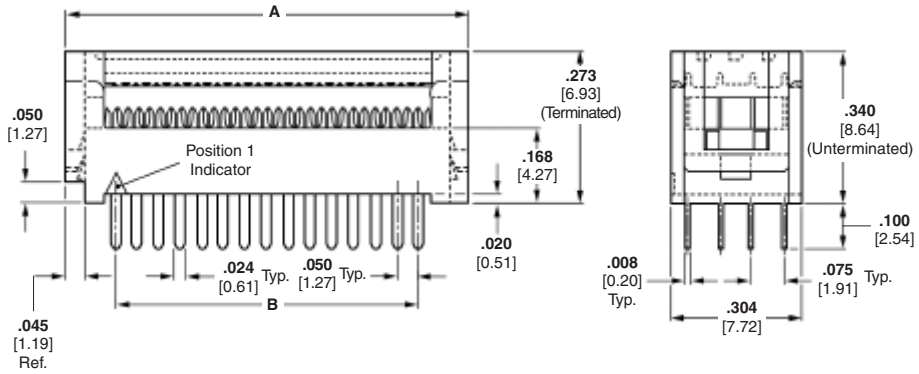

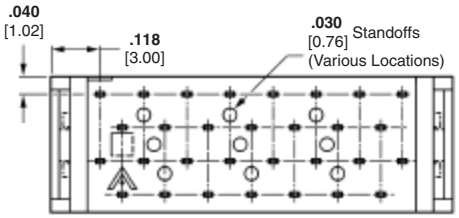

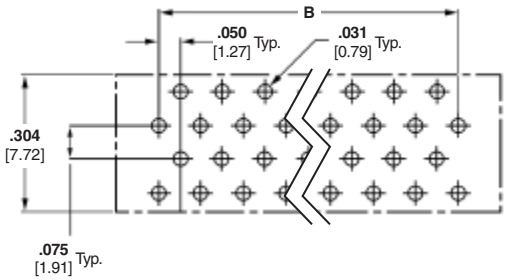

Printed Circuit Board Hole Layout #1

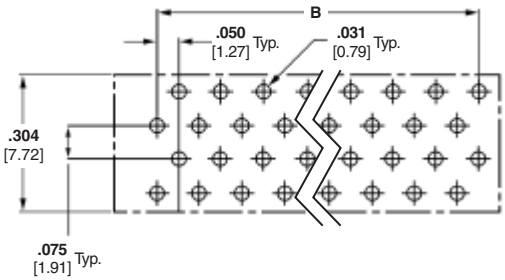

Printed Circuit Board Hole Layout #2

No. of Pos.	PCB Layout	Dimensions A	Dimensions B	Kinked Legs
10	1	**.436** 11.07	**.200** 5.08	5111595-1
14	1	**.536** 13.61	**.300** 7.62	5111595-2
16	2	**.586** 14.88	**.350** 8.89	5111595-3
20	2	**.686** 17.42	**.450** 11.43	5111595-4
24	2	**.786** 19.96	**.550** 13.97	5111595-5
26	1	**.836** 21.23	**.600** 15.24	5111595-6
28	2	**.886** 22.50	**.650** 16.51	2-5111595-0
30	1	**.936** 23.77	**.700** 17.78	5111595-7
34	1	**1.036** 26.31	**.800** 20.32	5111595-8
40	2	**1.186** 30.12	**.950** 24.13	5111595-9

No. of Pos.	PCB Layout	Dimensions A	Dimensions B	Kinked Legs
44	2	**1.286** 32.66	**1.050** 26.67	1-5111595-0
46	1	**1.336** 33.93	**1.100** 27.94	1-5111595-7
50	1	**1.436** 36.47	**1.200** 30.48	1-5111595-1
60	2	**1.686** 42.82	**1.450** 36.83	1-5111595-2
64	2	**1.786** 45.36	**1.550** 39.37	1-5111595-3
68	2	**1.886** 47.90	**1.650** 41.91	1-5111595-9
72	2	**1.986** 50.44	**1.750** 44.45	1-5111595-4
80	2	**2.186** 55.52	**1.950** 40.53	1-5111595-5
100	2	**2.686** 68.22	**2.450** 62.23	1-5111595-6

See Application Specification for termination tooling.
Note: All part numbers are RoHS compliant.

Catalog 82012
Revised 4-12

www.te.com

Dimensions are shown for reference purposes only. Specifications subject to change.

Dimensions are in inches and millimeters unless otherwise specified.
USA: +1 (800) 522-6752

Canada: +1 (905) 475-6222
Mexico/C. Am.: +52 (0) 55-1106-0800
Latin/S. Am.: +54 (0) 11-4733-2200
Germany: +49 (0) 6251-133-1999

UK: +44 (0) 800-267666
France: +33 (0) 1-3420-8686
Netherlands: +31 (0) 73-6246-999
China: +86 (0) 400-820-6015

Ultra ATA Bus Connectors, .025 [0.64] Centerline Ribbon Cable

Product Facts

- **IDC termination**
- **Backward compatible with current IDE Interfaces**
- **Improved signal integrity: 1 to 1 signal to ground ratio**
- **Improved crosstalk when compared to existing IDE Cable Assembly**
- **Color coded connectors for "System board," and "Master HDD" and "Slave HDD"**
- **Cable impedance 80 ohms**
- **Up to 3 connectors per cable assembly**
- **15 microinches gold plating**
- **Recognized under the Component Program of the Underwriters Laboratories, Inc. UL File No. E28476**
- **Certified by the Canadian Standards Association, File No. LR 7189**
- **Terminates 30 AWG solid or stranded PVC insulated 80 conductor ribbon cable**

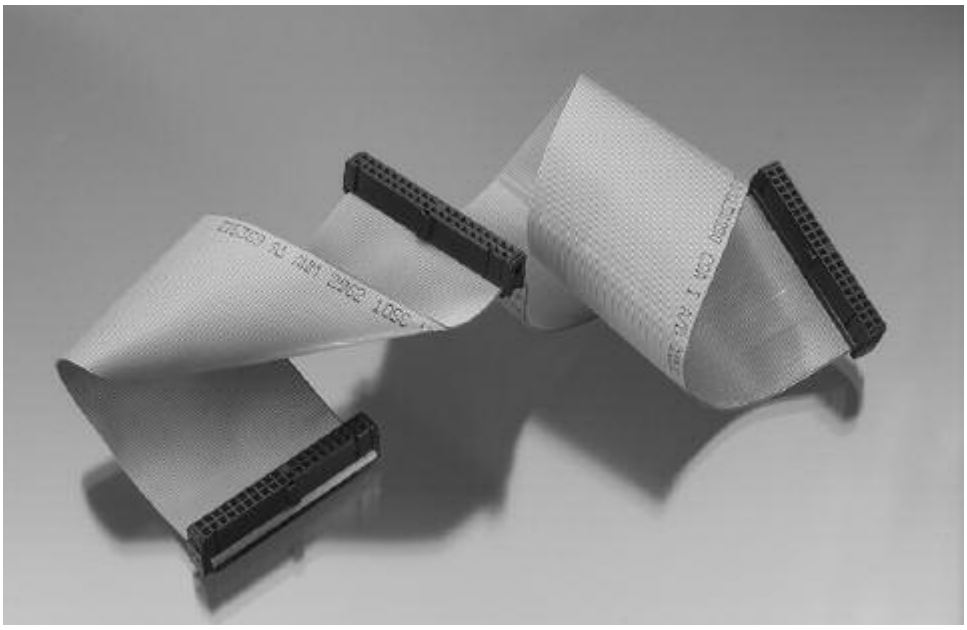

Ultra ATA is the next generation IDE (Integrated Drive Electronics) bus. The current IDE bus has a maximum data transfer rate of about 16.5 MB/second. As the bus speeds and disk drive performances increase, the cable assembly between the motherboard and hard drive becomes a limiting factor in data transfer from the drive.

The Ultra ATA connector and cable assembly from TE provide the customer with improved electrical performance by creating a 1:1 signal-to-ground ratio. The connector design incorporates an IDC bus bar to common the 40 additional ground signals. The cable is .025" centerline PVC ribbon cable. The connector is fully backward compatible with existing 40-position headers with pin 20 removed on motherboards and disk drives.

The new connectors are color coded to identify:

1. system board connector
2. primary or master hard drive connector
3. slave drive connector

Standard Issues

The Ultra ATA cable performance specification is part of the Small Form Factor Committee No. 8049. Compaq Computer and Western Digital are the major sponsors of the standard.

Contacts Available:

- 80 position IDC contact terminations
- 40 signal contacts
- 40 ground terminations to special IDC bus bar

Catalog 82012
Revised 4-12

www.te.com

Dimensions are shown for reference purposes only. Specifications subject to change.

Dimensions are in inches and millimeters unless otherwise specified.
USA: +1 (800) 522-6752

Canada: +1 (905) 475-6222
Mexico/C. Am.: +52 (0) 55-1106-0800
Latin/S. Am.: +54 (0) 11-4733-2200
Germany: +49 (0) 6251-133-1999

UK: +44 (0) 800-267666
France: +33 (0) 1-3420-8686
Netherlands: +31 (0) 73-6246-999
China: +86 (0) 400-820-6015

Ultra ATA Bus Connectors, .025 [0.64] Centerline Ribbon Cable (Continued)

Related Product Data

Strain Relief — Part Number 499252-1

Mateable Headers — page 15

Material & Finish

Housing and Cover — Thermoplastic, UL 94 V-0 rated, color per table

Contacts — Phosphor bronze, plated gold per table on mating end, .000050 [0.00127]min. tin in wire termination area, over .000050 [0.00127] min nickel on entire contact.

Technical Documents

Product Specification
108-1740

Application Specification
114-40056

See Application Specification for termination tooling.

Accessories

Strain Relief — page 68
Keying Plug — page 64
Pull Loops — page 66
Pull Tabs — page 63

Terminated View

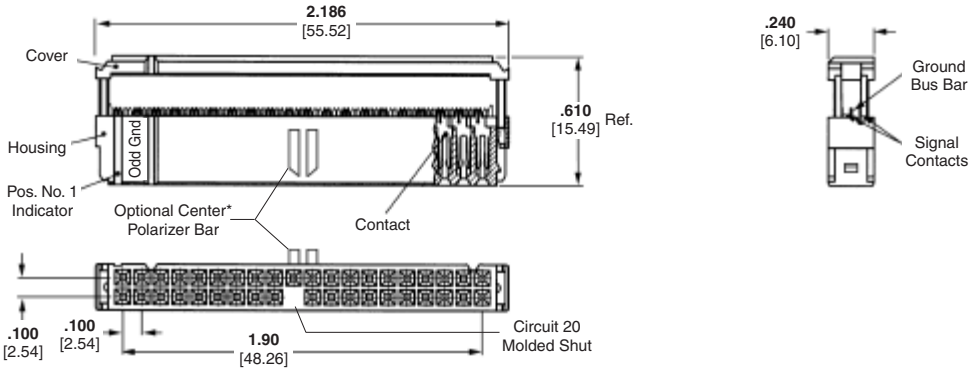

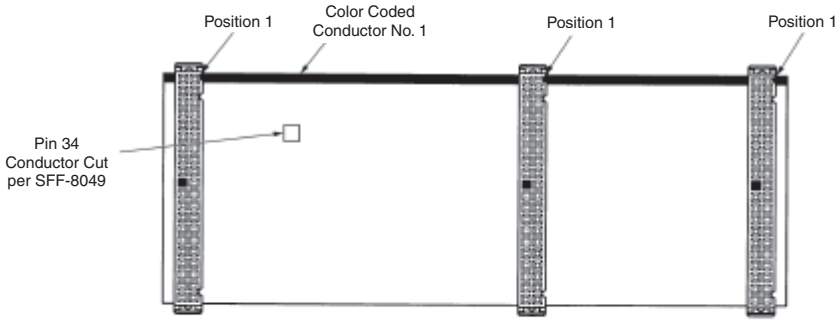

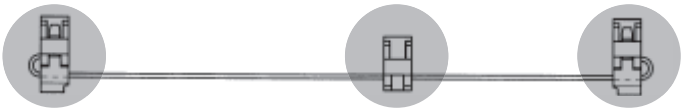

Configuration A	**"System" Board Connector**	**"Master" or "Primary" Connector**	**"Slave" Connector**
Configuration B	**"System" Board Connector**	**"Slave" Connector**	**"Master" or "Primary" Connector**

Connector Type	*Center & Military Polarized			Military Polarized		
	15µ" Gold	Housing Color	Cover Color	15µ" Gold	Housing Color	Cover Color
"System" Board	1658619-2	Blue	Black	1658618-2	Blue	Black
"Primary" or "Master"	1658619-1	Black	Black	1658618-1	Black	Black
"Slave"	1658619-3	Gray	Black	1658618-3	Gray	Black

Notes: 1. All connectors are "ODD GROUND" configuration, ie. all odd cable conductors are grounded. "EVEN GROUND" connectors are not available. See Customer Drawings for detailed electrical connection descriptions.
2. All part numbers are RoHS compliant.

Catalog 82012
Revised 4-12

www.te.com

Dimensions are shown for reference purposes only. Specifications subject to change.

Dimensions are in inches and millimeters unless otherwise specified.
USA: +1 (800) 522-6752

Canada: +1 (905) 475-6222
Mexico/C. Am.: +52 (0) 55-1106-0800
Latin/S. Am.: +54 (0) 11-4733-2200
Germany: +49 (0) 6251-133-1999

UK: +44 (0) 800-267666
France: +33 (0) 1-3420-8686
Netherlands: +31 (0) 73-6246-999
China: +86 (0) 400-820-6015

Ultra ATA Bus Connectors, .025 [0.64] Centerline Ribbon Cable (Continued)

Ultra ATA Compatible Headers

Universal Headers — Pin 20 Omitted

Post Type	Housing Material	Latch Type	Part Number	Contact Finish (Plating Code)	Solder Tail Length	Comments
Vertical	Nylon or PBT	Long	5111824-9	D	**.110** 2.79	
Vertical	Nylon or PBT	Short	6489700-1	B	**.123** 3.12	PP

Legend: PP — Polarization Peg

Low Profile Headers — Pin 20 Omitted

Post Type	Housing Material	Latch Type	Part Number	Contact Finish (Plating Code)	Solder Tail Length	Housing Color
Vertical	Nylon	None	1888188-1	A	**.120** 3.05	Black
Vertical	Nylon	None	1888188-2	B	**.120** 3.05	Black
Vertical	Nylon 6T	None	2-1734161-4	C	**.122** 3.10	Black
Vertical	Nylon 6T	None	2-1734161-5	C	**.122** 3.10	Blue
Vertical	Nylon	None	1734162-2	C	**.110** 2.79	Black
Vertical	Nylon	None	1734162-4	C	**.110** 2.79	Blue

Plating Code A — Duplex plated, gold flash on mating surfaces, .000100 [0.00254] min. tin on solder area, with entire post underplated .000050 [0.00127] min. nickel.
Plating Code B — Duplex plated, gold flash over palladium-nickel, .000015 [0.00038] min. total on mating surfaces, .000100 [0.00254] min. tin on solder area, with entire post underplated .000050 [0.00127] min. nickel **or** .000015 [0.00038] min. gold on mating surfaces, .000100 [0.00254] min. tin on solder area, with entire post underplated .000050 [0.00127] min. nickel.
Plating Code C — Gold flash over nickel underplate on entire post.
Plating Code D — Duplex plated, gold flash over palladium-nickel, .000030 [0.00076] min. total on mating surfaces, .000100 [0.00254] min. tin on solder area, with entire post underplated .000050 [0.00127] min. nickel **or** .000015 [0.00038] min. gold on mating surfaces, .000100 [0.00254] min. tin on solder area, with entire post underplated .000050 [0.00127] min. nickel.

Note: All part numbers are RoHS compliant.

Dimensions are shown for reference purposes only. Specifications subject to change.

Dimensions are in inches and millimeters unless otherwise specified.
USA: +1 (800) 522-6752

Canada: +1 (905) 475-6222
Mexico/C. Am.: +52 (0) 55-1106-0800
Latin/S. Am.: +54 (0) 11-4733-2200
Germany: +49 (0) 6251-133-1999

UK: +44 (0) 800-267666
France: +33 (0) 1-3420-8686
Netherlands: +31 (0) 73-6246-999
China: +86 (0) 400-820-6015

2.0 mm [.079] Receptacle Connectors

Product Facts

- **True hard metric 2.0 x 2.0 [.079 x .079] mating grid for 1.0 [.039] pitch ribbon cable**
- **Wide selection of configurations, 8-50 positions**
- **Insulation displacement (IDC), beryllium copper contacts, duplex plated gold-over-nickel**
- **Top/bottom single beam contact orientation**
- **UL 94V-0 rated thermoplastic components**
- **Assemblies are furnished preassembled with termination covers**
- **Optional polarization**
- **Optional strain relief available**
- **Connector assemblies packaged for ease of handling and protection**
- **Recognized under the Component Program of the Underwriters Laboratories, Inc. UL File No. E28476**
- **Certified by the Canadian Standards Association, File No. LR 7189**

Performance Data

Durability — 150 cycles

Termination Resistance — 25 milliohms max.

Mating Force — 1.67 N max. per contact

Unmating Force — 0.14 N min. per contact

Operating Temperature — -65°C to +105°C

Technical Documents

Product Specification
108-1372

Application Specification
114-40038

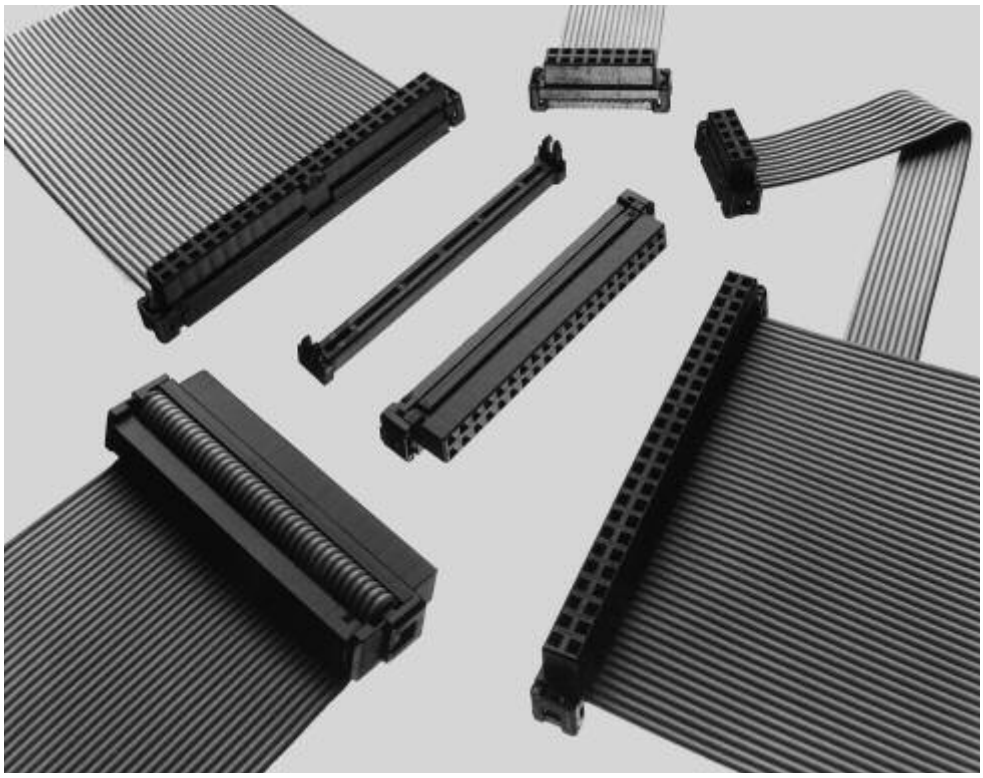

The 2.0 [.079] receptacle connector family features contacts on a true 2.0 x 2.0 [.079 x .079] mating grid for 1.0 [.039] pitch 28 AWG ribbon cable. A variety of configurations are available from 8 through 50 positions. This small, compact connector is finding wide acceptance throughout the electronic industry, particularly in the smaller laptop and notebook type computers with 63.5 [2.5] drives. Other areas of application include point-of-sale terminals, fax machines, photocopiers, printers, consumer electronics, and other computer peripheral equipment.

These receptacles feature insulation displacement contacts (IDC) with a top/bottom single-beam contact orientation. Contacts are beryllium copper, duplex plated 0.00076 [.000030] gold in the mating area and 0.00254 [.000100] min. tin on termination end, all over 0.00127 [.000050] nickel underplating. Contact mating area is 1.54 [.061] from the face of the housing and they accept 0.50mm [.0197] round or square posts.

Housings are made of UL 94V-0 rated polyester with optional center bar polarization. Complete assemblies are furnished preassembled with termination covers. The complete assembly presents a compact design only 5.2 [.203] wide over the termination cover by 4 [.157] deep by 4 [.157] wide mating end. Terminated height is 8.48 [.334]. Optional strain relief available. Assemblies are packaged for ease of handling and protection.

Catalog 82012
Revised 4-12

www.te.com

Dimensions are shown for reference purposes only. Specifications subject to change.

Dimensions are in inches and millimeters unless otherwise specified.
USA: +1 (800) 522-6752

Canada: +1 (905) 475-6222
Mexico/C. Am.: +52 (0) 55-1106-0800
Latin/S. Am.: +54 (0) 11-4733-2200
Germany: +49 (0) 6251-133-1999

UK: +44 (0) 800-267666
France: +33 (0) 1-3420-8686
Netherlands: +31 (0) 73-6246-999
China: +86 (0) 400-820-6015

2.0 mm [.079] Receptacle Connectors, Non-Polarized and Center Polarized Bar

Material and Finish

Housing and Termination Cover — UL 94V-0 rated polyester, black

Contacts — Beryllium copper, duplex plated 0.00076 [.000030] min. gold on mating end, 0.00013 [.000005] min. gold on termination end, all underplated 0.00127 [.000050] min. nickel

Note: Accepts 0.08-0.09mm² [28 AWG] ribbon cable, PVC insulated 1.00 [.039] pitch. See Application Specification for details.

Technical Documents

Product Specification
108-1372

Application Specification
114-40038

Mateable Connectors — pages 9 and 12, or see Application Specification for header requirements

Accessories

Pull Loops — page 66
Keying Plugs — page 64
Strain Relief — page 68

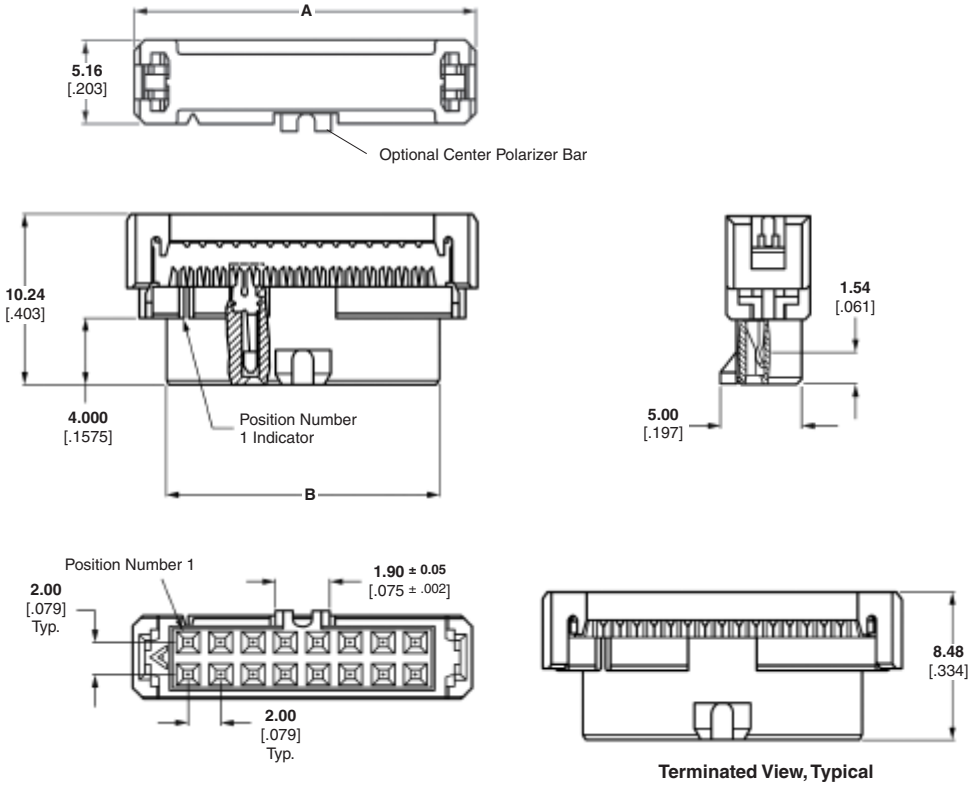

Terminated View, Typical

No. of Positions	Dimensions A	Dimensions B	Center Polarized	Non-Polarized
8	**13.18** .519	**8.41** .331	3-111623-0	2-111626-4
10	**15.16** .597	**10.41** .410	1-111623-8	1-111626-7
12	**17.15** .675	**12.40** .488	3-111623-1	—
14	**19.18** .755	**14.40** .567	1-111623-9	1-111626-8
16	**21.18** .834	**16.41** .646	2-111623-0	2-111626-5
20	**25.17** .991	**20.40** 803	2-111623-1	1-111626-9
22	**27.18** 1.070	**22.40** .882	2-111623-9	—
24	**29.18** 1.149	**24.41** .961	2-111623-7	2-111626-6
26	**31.17** 1.227	**26.42** 1.040	2-111623-2	2-111626-7
30	**35.18** 1.385	**30.40** 1.197	2-111623-3	—
34	**39.17** 1.542	**34.42** 1.355	2-111623-8	2-111626-0
40	**45.19** 1.779	**40.41** 1.591	2-111623-4	2-111626-1
44	**49.17** 1.936	**44.40** 1.748	2-111623-5	2-111626-2
50	**55.17** 2.172	**50.39** 1.984	2-111623-6	2-111626-3

Note: All part numbers are RoHS compliant.

Catalog 82012
Revised 4-12

www.te.com

Dimensions are shown for reference purposes only. Specifications subject to change.

Dimensions are in inches and millimeters unless otherwise specified.
USA: +1 (800) 522-6752

Canada: +1 (905) 475-6222
Mexico/C. Am.: +52 (0) 55-1106-0800
Latin/S. Am.: +54 (0) 11-4733-2200
Germany: +49 (0) 6251-133-1999

UK: +44 (0) 800-267666
France: +33 (0) 1-3420-8686
Netherlands: +31 (0) 73-6246-999
China: +86 (0) 400-820-6015

AMPMODU 50/50 Grid Connector System

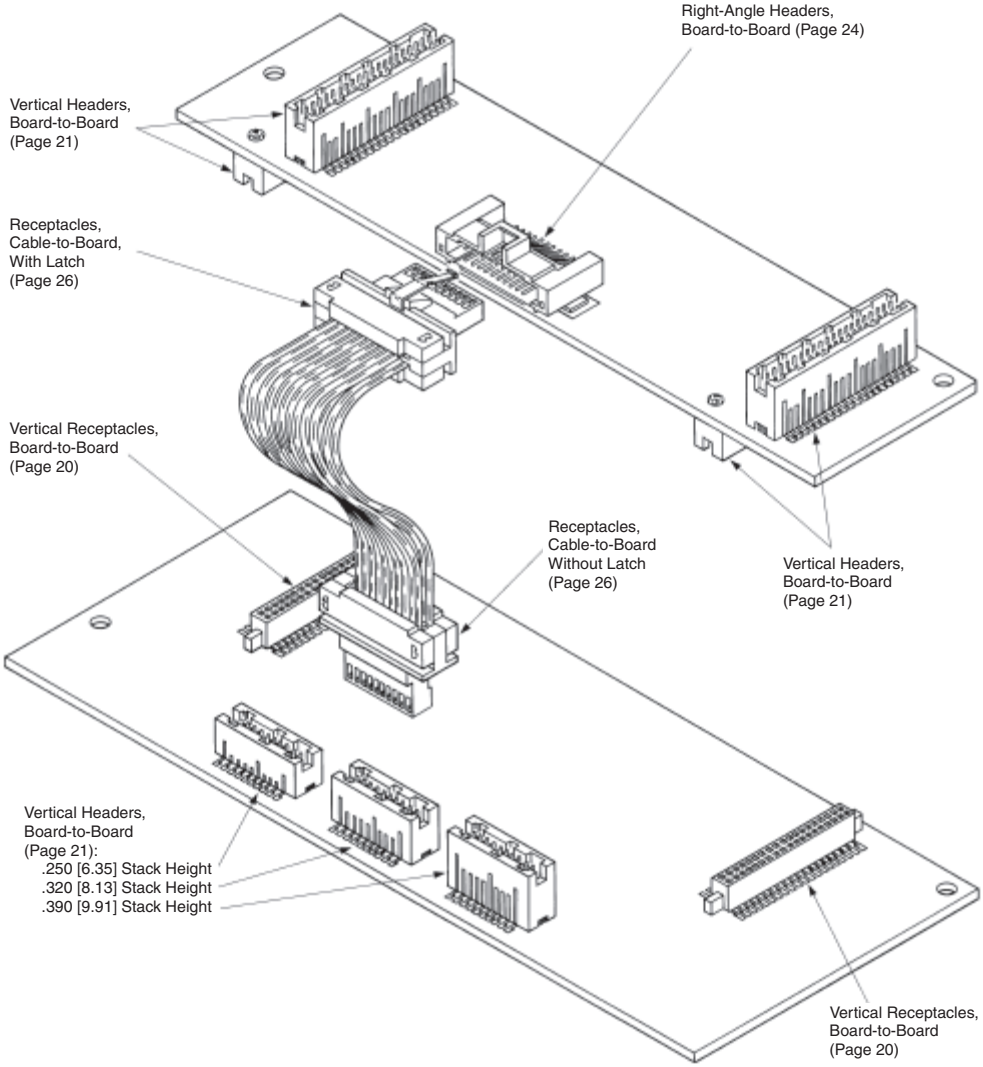

Produced under a Quality Management System certified to ISO 9001

A copy of the certificate is available upon request.

Catalog 82012
Revised 4-12

www.te.com

Dimensions are shown for reference purposes only. Specifications subject to change.

Dimensions are in inches and millimeters unless otherwise specified.
USA: +1 (800) 522-6752

Canada: +1 (905) 475-6222
Mexico/C. Am.: +52 (0) 55-1106-0800
Latin/S. Am.: +54 (0) 11-4733-2200
Germany: +49 (0) 6251-133-1999

UK: +44 (0) 800-267666
France: +33 (0) 1-3420-8686
Netherlands: +31 (0) 73-6246-999
China: +86 (0) 400-820-6015

Board-to-Board Vertical Receptacles and Headers

Product Facts

- **Surface-mount products for parallel board-to-board applications, as well as right-angle board-to-board and cable-to-board applications**
- **High density .050 x .050 [1.27x1.27] centerline grid**
- **Three board-to-board stack heights: .250 [6.35], .320 [8.13] and .390 [9.91]**
- **Non-protrusive metallic holddowns**
- **Reliable dual beam receptacle contacts for redundant contact**
- **Duplex plated receptacle and post contacts; gold plated on mating areas, tin plated on tails**
- **Compatible with standard surface-mount processing (VPR and IR)**
- **Receptacle and header allow for drainage of processing fluids**
- **Tape and reel packaging available. Contact TE for details**
- **Polarized header and receptacle assemblies**
- **Sizes of 10, 20, 30, 40, 50, 60, 70, 80 and 100 positions**
- **Recognized under the Component Program of Underwriters Laboratories Inc., File No. E28476**
- **Certified by Canadian Standards Association File No. LR7189**

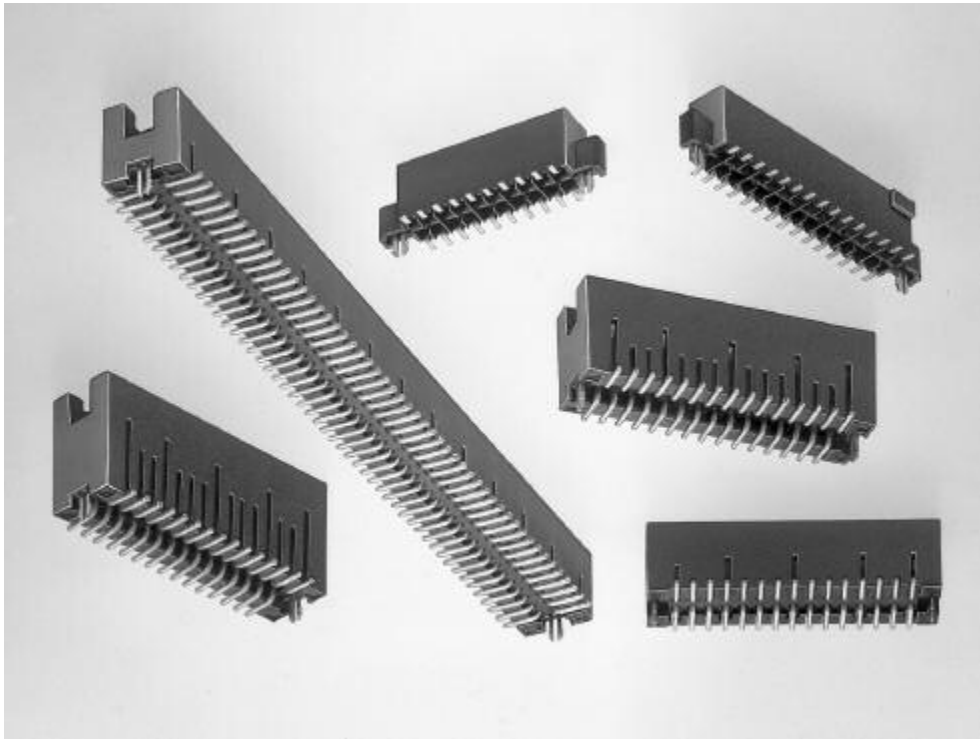

AMPMODU 50/50 Grid Vertical Headers and Receptacles are designed for parallel board-to-board stacking in high density applications.

Right-angle board-to-board and cable-to-board applications are also possible, since the vertical receptacles also mate with non-latching right-angle headers (page 24) and the vertical headers also mate with non-latching cable connectors.

Available are double row, vertical shrouded headers and receptacles in sizes ranging from 10 through 100 positions (in 10 position increments).

Parallel board-to-board stack heights of .250 [6.35], .320 [8.13] and .390 [9.91] are achievable by selection of the appropriate header. The receptacle is the same for all three stack height headers.

Non-protrusive metallic holddowns are designed for use in .062 [1.57] or thicker PC boards and allow surface mounting to both sides of the board. In addition to providing retention during processing, the holddowns are soldered during reflow and therefore provide long-term strain relief for the solder joints.

AMPMODU 50/50 Grid Vertical Headers and Receptacles are designed to be compatible with standard surface-mount processes; IR (infrared) and VPR (vapor phase reflow). The surface-mount connectors have been designed so that dimensioning, tolerances, referenced datums, holddown characteristics and packaging methods result in a system that is compatible with robotic assembly.

The headers and receptacles feature polarization to prevent misalignment.

Non-Protrusive Metallic Holddowns

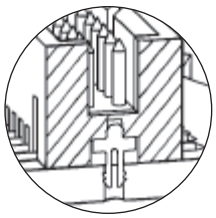

Three Board Stack Heights

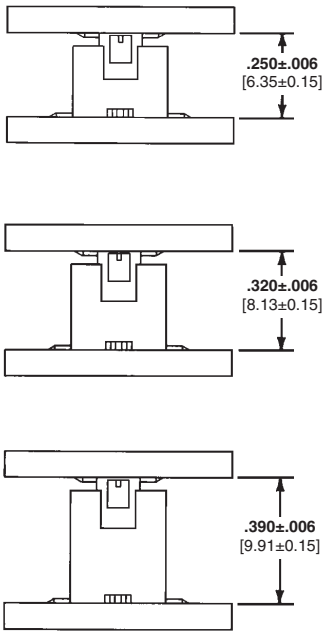

Dimensions are shown for reference purposes only. Specifications subject to change.

Dimensions are in inches and millimeters unless otherwise specified.
USA: +1 (800) 522-6752

Canada: +1 (905) 475-6222
Mexico/C. Am.: +52 (0) 55-1106-0800
Latin/S. Am.: +54 (0) 11-4733-2200
Germany: +49 (0) 6251-133-1999

UK: +44 (0) 800-267666
France: +33 (0) 1-3420-8686
Netherlands: +31 (0) 73-6246-999
China: +86 (0) 400-820-6015

Board-to-Board Vertical Receptacles, Double Row, .050 x .050 [1.27 x 1.27] Centerline

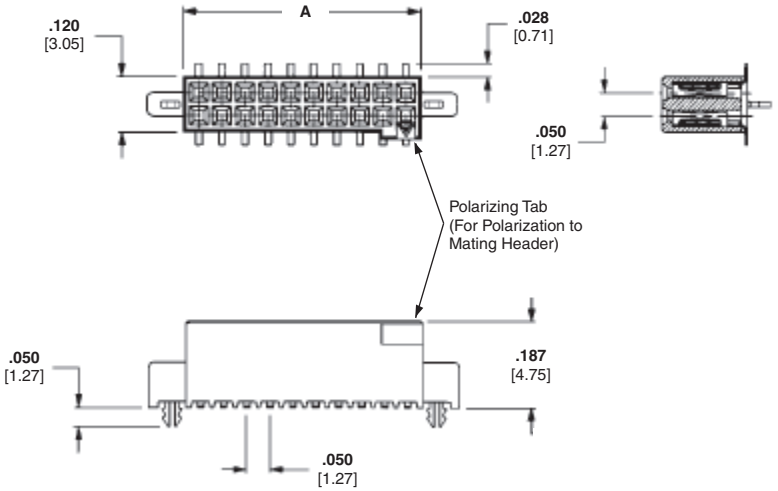

Material and Finish

Housing—Glass-filled thermoplastic, black, 94V-0 rated

Contacts—Copper alloy; duplex plated .000030 [0.00076] gold in mating area, .000150 [0.00381] tin on solder tail, with entire contact underplated .000050 [0.00127] nickel

Holddown—Copper alloy; plated .000150 [0.00381] tin over .000050 [0.00127] nickel

Related Product Data

Mating Headers — pages 21 and 24
PC Board Layouts — page 22
Performance Specifications — page 29

Technical Documents — page 29

Product Specification 108-1332
Application Specification 114-7010
Packaging — Tube or Tape and Reel

No. of Pos.	Dimension A	Receptacle Part Numbers		
		Tube	Tape and Reel*	No Hold Down w/Vacuum Cover
10	**.266** [6.75]	5-104652-1	5-147384-1	5-147413-1
20	**.516** [13.11]	5-104652-2	5-147384-2	5-147413-3
30	**.766** [19.46]	5-104652-3	5-147384-3	5-147413-4
40	**1.016** [25.81]	5-104652-4	5-147384-4	—
50	**1.266** [32.16]	5-104652-5	5-147384-5	5-147413-2
60	**1.516** [38.51]	5-104652-6	5-147384-6	—
70	**1.766** [44.86]	5-104652-7	5-147384-7	—
80	**2.016** [51.21]	5-104652-8	5-147384-8	—
100	**2.516** [63.91]	6-104652-0	5-147384-9	—

* Parts packaged in tape and reel have vacuum pick and place cover.
See PC Board Layout on page 22.

Note: All part numbers are RoHS compliant.

Catalog 82012
Revised 4-12

www.te.com

Dimensions are shown for reference purposes only. Specifications subject to change.

Dimensions are in inches and millimeters unless otherwise specified.
USA: +1 (800) 522-6752

Canada: +1 (905) 475-6222
Mexico/C. Am.: +52 (0) 55-1106-0800
Latin/S. Am.: +54 (0) 11-4733-2200
Germany: +49 (0) 6251-133-1999

UK: +44 (0) 800-267666
France: +33 (0) 1-3420-8686
Netherlands: +31 (0) 73-6246-999
China: +86 (0) 400-820-6015

Board-to-Board Vertical Headers, Double Row, .050 x .050 [1.27 x 1.27] Centerline

For .250 [6.35] Mated Height

For .320 [8.13] Mated Height

For .390 [9.91] Mated Height

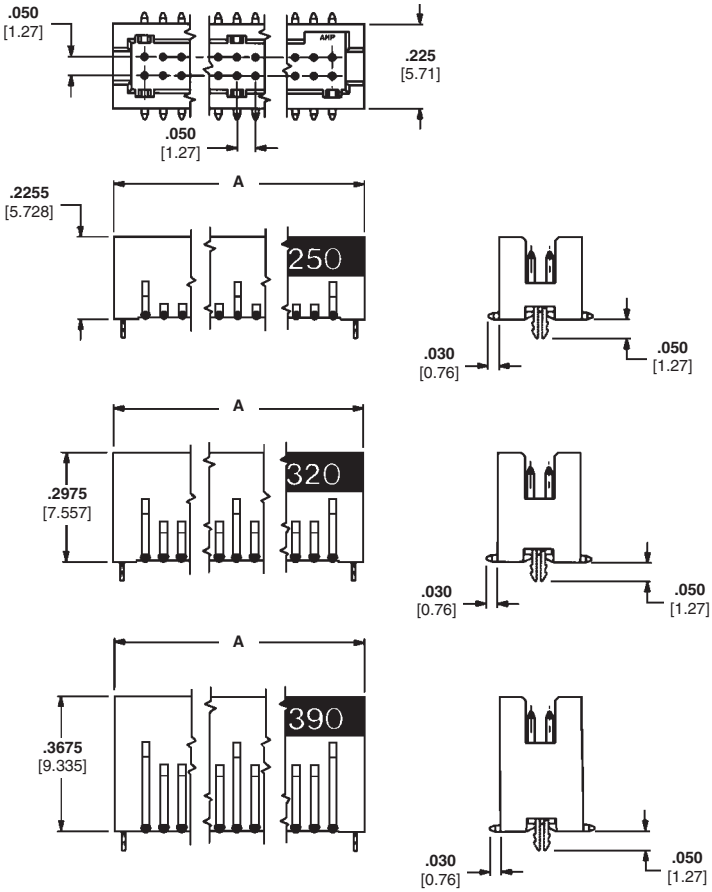

Material and Finish

Housing—Glass-filled thermoplastic, black, 94V-0 rated

Contacts—Copper alloy; duplex plated .000030 [0.00076] gold in mating area, .000150 [0.00381] tin on solder tail, with entire contact underplated .000050 [0.00127] nickel

Holddown—Copper alloy; plated .000150 [0.00381] tin over .000050 [0.00127] nickel

Related Product Data

Mating Receptacles — pages 20 and 26 (without latch only)

PC Board Layouts — page 22

Performance Specifications — page 29

Technical Documents — page 29

Product Specification 108-1332

Application Specification 114-7010

Packaging — Tube or Tape and Reel

No. of Pos.	Dimension A	Header Part Numbers							
		.250 [6.35] Mated Height			.320 [8.13] Mated Height		.390 [9.91] Mated Height		
		Tubes	Tape & Reel*		Tubes	Tape & Reel*	Tubes		Tape & Reel*
			Hold Down	No Hold Down			Hold Down	No Hold Down	
10	**.372** [9.44]	5-104655-1	5-147381-1	5-147121-1	5-104656-1	5-147382-1	5-104693-1	—	5-147383-1
20	**.622** [15.79]	5-104655-3	5-147381-2	5-147121-2	5-104656-2	5-147382-2	5-104693-2	—	5-147383-2
30	**.872** [22.14]	5-104655-4	5-147381-3	—	5-104656-3	5-147382-3	5-104693-3	—	5-147383-3
40	**1.122** [28.49]	5-104655-5	5-147381-4	—	5-104656-4	5-147382-4	5-104693-4	—	5-147383-4
50	**1.372** [34.84]	5-104655-6	5-147381-5	—	5-104656-5	5-147382-5	5-104693-5	—	5-147383-5
60	**1.622** [41.19]	5-104655-7	5-147381-6	—	5-104656-6	5-147382-6	5-104693-6	—	5-147383-6
70	**1.872** [47.54]	5-104655-8	5-147381-7	—	5-104656-7	5-147382-7	5-104693-7	—	5-147383-7
80	**2.122** [53.89]	5-104655-9	5-147381-8	—	5-104656-8	5-147382-8	5-104693-8	—	5-147383-8
90	**2.372** [60.24]	—	—	—	5-104656-9	—	5-104693-9	—	—
100	**2.622** [66.59]	6-104655-1	5-147381-9	—	6-104656-0	5-147382-9	6-104693-0	5-147503-1	5-147383-9

*Parts packaged in tape and reel have vacuum pick and place cover.
See PC Board Layout on page 22.

Note: All part numbers are RoHS compliant.

Dimensions are shown for reference purposes only. Specifications subject to change.

Dimensions are in inches and millimeters unless otherwise specified.
USA: +1 (800) 522-6752

Canada: +1 (905) 475-6222
Mexico/C. Am.: +52 (0) 55-1106-0800
Latin/S. Am.: +54 (0) 11-4733-2200
Germany: +49 (0) 6251-133-1999

UK: +44 (0) 800-267666
France: +33 (0) 1-3420-8686
Netherlands: +31 (0) 73-6246-999
China: +86 (0) 400-820-6015

Recommended PC Board Layouts for Vertical Connectors

Headers

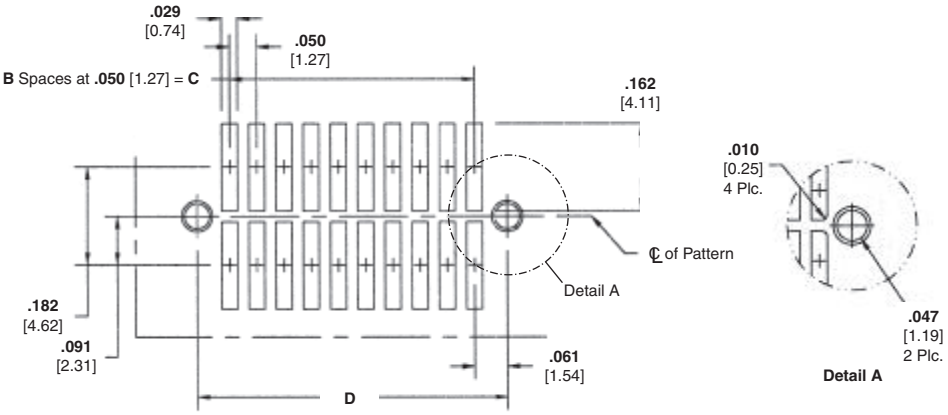

Receptacles

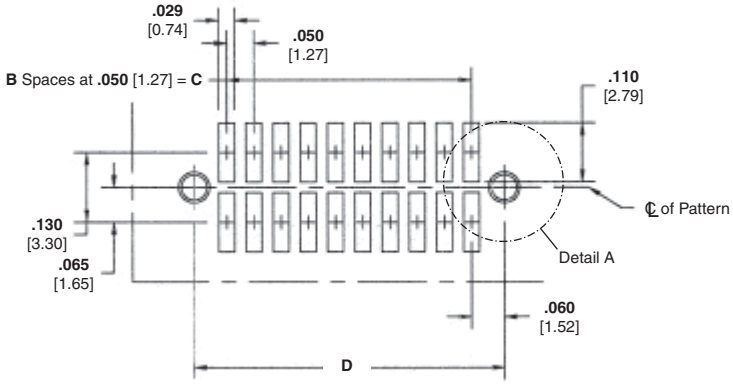

No. of Pos.	Receptacle Dimensions			Header Dimensions		
	B	C	D	B	C	D
10	4	**.200** [5.08]	**.320** [8.12]	4	**.200** [5.08]	**.322** [8.17]
20	9	**.450** [11.43]	**.570** [14.48]	9	**.450** [11.43]	**.572** [14.52]
30	14	**.700** [17.78]	**.820** [20.83]	14	**.700** [17.78]	**.822** [20.87]
40	19	**.950** [24.13]	**1.070** [27.19]	19	**.950** [24.13]	**1.072** [27.22]
50	24	**1.200** [30.48]	**1.320** [33.53]	24	**1.200** [30.48]	**1.322** [33.57]
60	29	**1.450** [36.83]	**1.570** [39.88]	29	**1.450** [36.83]	**1.572** [39.92]
70	34	**1.700** [43.18]	**1.820** [46.23]	34	**1.700** [43.18]	**1.822** [46.27]
80	39	**1.950** [49.53]	**2.070** [52.58]	39	**1.950** [49.53]	**2.072** [52.62]
90	44	**2.200** [55.88]	**2.320** [58.93]	44	**2.200** [55.88]	**2.322** [58.97]
100	49	**2.450** [62.23]	**2.570** [65.28]	49	**2.450** [62.23]	**2.572** [65.32]

Note: Refer to TE Customer Drawings for additional PC board layout information and dimensional tolerances.

Dimensions are shown for reference purposes only. Specifications subject to change.

Dimensions are in inches and millimeters unless otherwise specified.
USA: +1 (800) 522-6752

Canada: +1 (905) 475-6222
Mexico/C. Am.: +52 (0) 55-1106-0800
Latin/S. Am.: +54 (0) 11-4733-2200
Germany: +49 (0) 6251-133-1999

UK: +44 (0) 800-267666
France: +33 (0) 1-3420-8686
Netherlands: +31 (0) 73-6246-999
China: +86 (0) 400-820-6015

Board-to-Board Right-Angle Headers

Product Facts

- **Surface-mount products for right-angle board-to-board and cable-to-board applications**
- **Double-row, right-angle shrouded headers**
- **High density .050 x .050 [1.27 x 1.27] centerline grid**
- **Latching and non-latching versions available**
- **Non-protrusive metallic holddowns**
- **Metallic tabs, when soldered to PC board pad, provide added mechanical support**
- **Duplex plated post contacts; gold plated on mating area, tin plated on tails**
- **Compatible with standard surface-mount processing (VPR and IR)**
- **Standoffs on header housings allow for drainage of processing fluids**
- **All headers are polarized**
- **Sizes of 10, 20, 30, 40, 50, 60, 70, 80 and 100 positions**
- **Recognized under the Component Program of Underwriters Laboratories Inc., File No. E28476**
- **Certified by Canadian Standards Association File No. LR7189**

AMPMODU 50/50 Grid Right-Angle Headers will accommodate a variety of high density packaging applications; right-angle board-to-board applications when mated with vertical receptacles (page 20) and right-angle cable-to-board applications when mated with cable connectors (page 26). The small .050 x .050 [1.27 x 1.27] centerline contact spacing allows efficient use of the PC board area.

Mechanical support of the headers to the PC board is provided by non-protrusive metallic holddowns designed for .062 [1.57] or thicker PC boards. These holddowns are of the same design as those used in the vertical headers (page 21) and receptacles (page 20). There are also metallic tabs that are soldered to the surfaces of the PC board pads for added support.

AMPMODU 50/50 Grid Right-Angle Headers are available in double-row, in either latching or non-latching versions, and in sizes ranging from 10 through 100 positions (in 10 position increments). The latching version provides positive retention when mated with the latching cable connector (page 26). All headers feature polarization to help prevent misalignment during mating.

Catalog 82012
Revised 4-12

www.te.com

Dimensions are shown for reference purposes only. Specifications subject to change.

Dimensions are in inches and millimeters unless otherwise specified.
USA: +1 (800) 522-6752

Canada: +1 (905) 475-6222
Mexico/C. Am.: +52 (0) 55-1106-0800
Latin/S. Am.: +54 (0) 11-4733-2200
Germany: +49 (0) 6251-133-1999

UK: +44 (0) 800-267666
France: +33 (0) 1-3420-8686
Netherlands: +31 (0) 73-6246-999
China: +86 (0) 400-820-6015

Board-to-Board Right-Angle Headers, Double Row, .050 x .050 [1.27 x 1.27] Centerline

Non-Latching Header

Latching Header

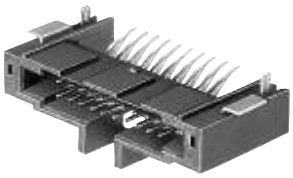

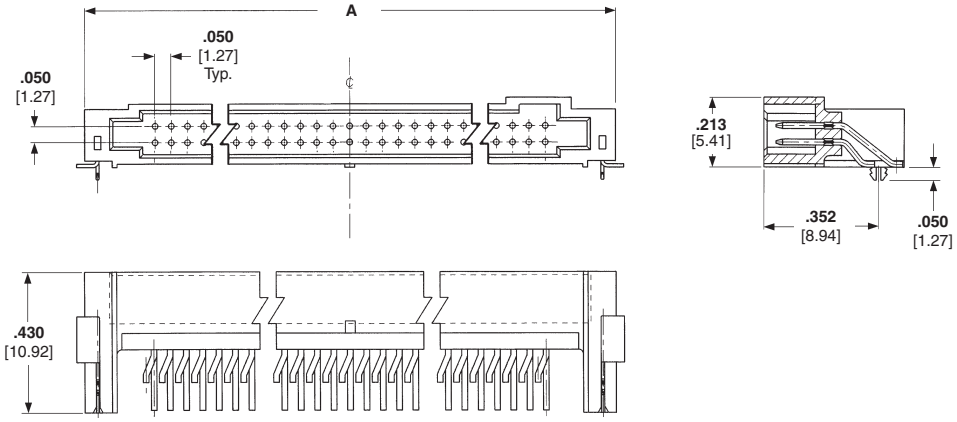

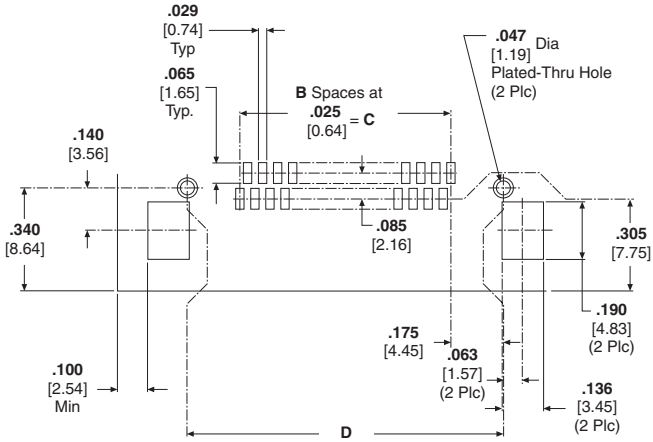

Recommended PC Board Layout

Note: Refer to TE Customer Drawings for additional PC board layout information and dimensional tolerances.

Material and Finish

Housing — Liquid crystal polymer, black, 94V-0 rated

Contacts — Copper alloy; duplex plated .000030 [0.00076] gold in mating area, .000150 [0.000381] tin on solder tail, with entire contact under-plated .000050 [0.00127] nickel

Holddown — Copper alloy; plated .0000150 [0.00381] tin over .000050 [0.00127] nickel

Related Product Data

Mating Receptacles — pages 20 and 26

Performance Specifications — page 29

Technical Documents — page 29

Product Specification 108-1443

Application Specification 114-7010

Packaging — Tube

No. of Pos.	Dimensions				Header Part Numbers	
	A	B	C	D	Latching	Non-Latching
10	**.630** [16.00]	9	**.225** [5.72]	**.550** [13.97]	5-104895-1	5-104894-1
20	**.880** [22.35]	19	**.475** [12.07]	**.800** [20.32]	5-104895-2	5-104894-2
30	**1.130** [28.70]	29	**.725** [18.42]	**1.050** [26.67]	5-104895-3	5-104894-3
40	**1.380** [35.05]	39	**.975** [24.77]	**1.300** [33.02]	5-104895-4	5-104894-4
50	**1.630** [41.40]	49	**1.225** [31.12]	**1.550** [39.37]	5-104895-5	5-104894-5
60	**1.880** [47.75]	59	**1.475** [37.47]	**1.800** [45.72]	5-104895-6	5-104894-6
70	**2.130** [54.10]	69	**1.725** [43.82]	**2.050** [52.07]	5-104895-7	5-104894-7
80	**2.380** [60.45]	79	**1.975** [50.17]	**2.300** [58.42]	5-104895-8	5-104894-8
100	**2.880** [73.15]	99	**2.475** [62.87]	**2.800** [71.12]	6-104895-0	6-104894-0

Note: All part numbers are RoHS compliant.

Dimensions are shown for reference purposes only. Specifications subject to change.

Dimensions are in inches and millimeters unless otherwise specified.
USA: +1 (800) 522-6752

Canada: +1 (905) 475-6222
Mexico/C. Am.: +52 (0) 55-1106-0800
Latin/S. Am.: +54 (0) 11-4733-2200
Germany: +49 (0) 6251-133-1999

UK: +44 (0) 800-267666
France: +33 (0) 1-3420-8686
Netherlands: +31 (0) 73-6246-999
China: +86 (0) 400-820-6015

Cable-to-Board Connectors

Product Facts

- **Double-row receptacle connectors provide cable-to-board connection capabilities for vertical headers (non-latching) and right-angle headers (latching and non-latching)**
- **IDC (Insulation Displacement Crimp) mass termination of solid or stranded round conductor .050 [1.27] centerline ribbon cable with PVC or polyethylene insulation**
- **Accommodates ribbon cable conductor sizes of 28 AWG [0.08-0.09 mm²] and 30 AWG [0.05 mm²] and insulation diameters up to .036 [0.91] maximum**
- **Reliable single beam receptacle contact design**
- **Duplex plated receptacle contacts; gold plated in mating area, tin in termination area**
- **Terminating covers (sold separately) provide both strain relief and protection to the termination area**
- **Sizes of 10, 20, 30, 40, 50, 60, 70, 80 and 100 positions**
- **Connectors available with or without metal latch**
- **Connectors without latches are polarized to help prevent mismating**
- **Recognized under the Component Program of Underwriters Laboratories Inc., File No. E28476**
- **Certified by Canadian Standards Association File No. LR7189**

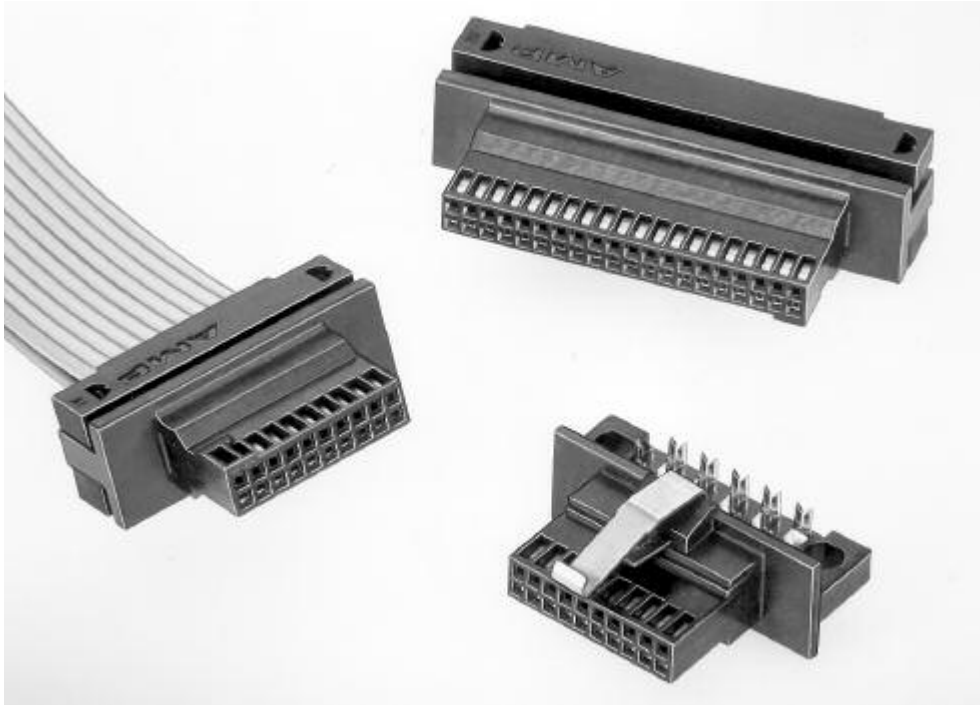

These double-row cable connectors, with a .050 x .050 [1.27 x 1.27] centerline contact spacing, provide cable-to-board connection capabilities for the AMPMODU 50/50 Grid Connector System. Cable connectors without a latch will mate with the vertical headers (page 21), while cable connectors with or without a latch can be used to mate with the right-angle headers (page 24).

The cable connectors feature reliable single-beam IDC (insulation displacement crimp) contacts which are duplex plated with .000030 [0.00076] gold. These contacts can be mass terminated to either solid or stranded round conductor ribbon cable with conductor sizes of 28 AWG [0.08-0.09 mm²] and 30 AWG [0.05 mm²] and a maximum insulation diameter of .036 [0.91]. During termination, the terminating covers, which must be purchased separately, assist in guiding the wire into the IDC contacts, then provide strain relief when fully seated. Actual termination is accomplished with the TE manual tooling shown on page 28.

The latching version of the cable connector is equipped with a metal latch which provides positive retention of the receptacle cable connector when mated with a surface-mounted right-angle header. The cable connector without a metal latch features polarization to help prevent mismating. All connectors are available in sizes ranging from 10 through 100 positions (in 10 position increments).

Catalog 82012
Revised 4-12

www.te.com

Dimensions are shown for reference purposes only. Specifications subject to change.

Dimensions are in inches and millimeters unless otherwise specified.
USA: +1 (800) 522-6752

Canada: +1 (905) 475-6222
Mexico/C. Am.: +52 (0) 55-1106-0800
Latin/S. Am.: +54 (0) 11-4733-2200
Germany: +49 (0) 6251-133-1999

UK: +44 (0) 800-267666
France: +33 (0) 1-3420-8686
Netherlands: +31 (0) 73-6246-999
China: +86 (0) 400-820-6015

Cable-to-Board Receptacle Connectors, Double Row, .050 x .050 [1.27 x 1.27] Centerline

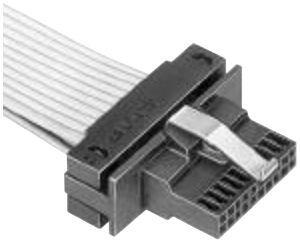

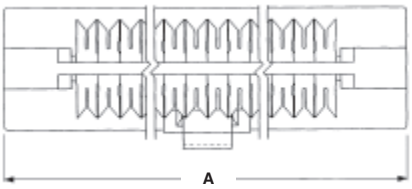

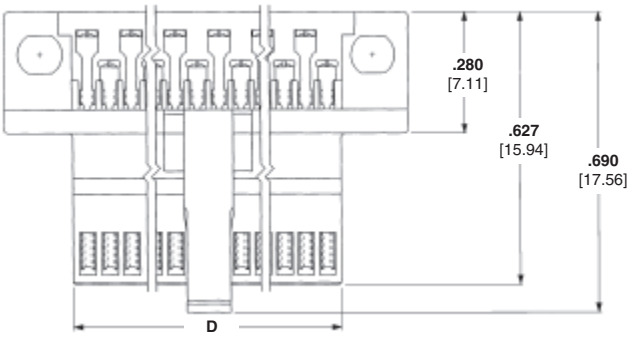

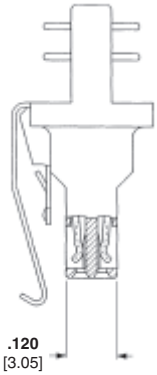

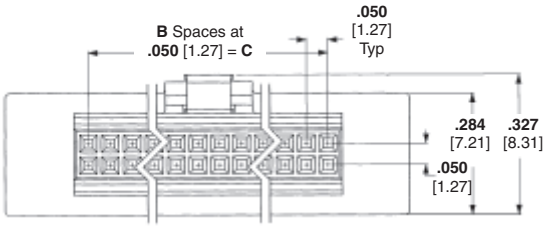

Material and Finish

Housing — Thermoplastic, black, 94V-0 rated

Latch — Stainless steel

Contacts — Phosphor bronze; duplex plated .000030 [0.00076] minimum gold in mating area, .000150 [0.00381] minimum tin on solder tail, with entire contact underplated .000050 [0.00127] minimum nickel

Related Product Data

Mating Headers — pages 21 and 24 (latching)

Terminating Covers (Must be Purchased Separately, 2 Required per Connector) — page 27

Termination Tooling — page 28

Performance Specifications — page 29

Technical Documents — page 29

Product Specification 108-1443

Application Specification 408-9817, 408-9909

Packaging — Tube

No. of Pos.	Dimensions				Receptacle Part Numbers	
	A	B	C	D	With Latch	Without Latch
10	**.578** [14.68]	4	**.200** [5.08]	**.266** [6.76]	5-104892-1	5-104893-1
20	**.828** [21.03]	9	**.450** [11.43]	**.516** [13.11]	5-104892-2	5-104893-2
30	**1.078** [27.38]	14	**.700** [17.78]	**.766** [19.46]	5-104892-3	5-104893-3
40	**1.328** [33.73]	19	**.950** [24.13]	**1.016** [25.81]	5-104892-4	5-104893-4
50	**1.578** [40.08]	24	**1.200** [30.48]	**1.266** [32.16]	5-104892-5	5-104893-5
60	**1.828** [46.43]	29	**1.450** [36.83]	**1.516** [38.51]	5-104892-6	5-104893-6
70	**2.078** [52.78]	34	**1.700** [43.18]	**1.766** [44.86]	5-104892-7	5-104893-7
80	**2.328** [59.13]	39	**1.950** [49.53]	**2.016** [51.21]	5-104892-8	5-104893-8
100	**2.828** [71.83]	49	**2.450** [62.23]	**2.516** [63.91]	6-104892-0	6-104893-0

Note: All part numbers are RoHS compliant.

Dimensions are shown for reference purposes only. Specifications subject to change.

Dimensions are in inches and millimeters unless otherwise specified.
USA: +1 (800) 522-6752

Canada: +1 (905) 475-6222
Mexico/C. Am.: +52 (0) 55-1106-0800
Latin/S. Am.: +54 (0) 11-4733-2200
Germany: +49 (0) 6251-133-1999

UK: +44 (0) 800-267666
France: +33 (0) 1-3420-8686
Netherlands: +31 (0) 73-6246-999
China: +86 (0) 400-820-6015

Terminating Covers for Cable Connectors

Material

Glass-filled thermoplastic, black, 94V-0 rated

Related Product Data

Connectors used with Covers — page 26
Termination Tooling — page 28

Technical Documents — page 29

Product Specification 108-1443
Application Specification 408-9817, 408-9909
Packaging — Plastic bag

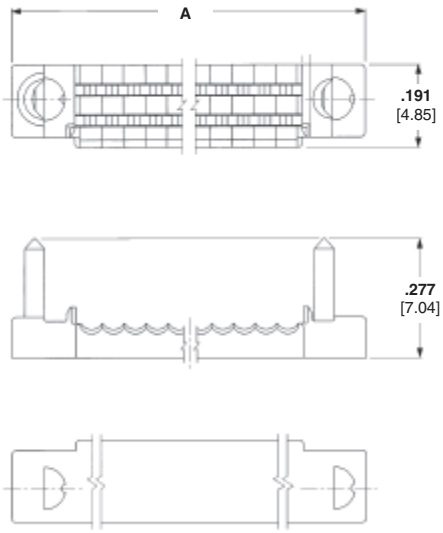

No. of Pos.	Dimension A	Terminator Cover Part Numbers
10	**.565** [14.35]	104891-1
20	**.815** [20.70]	104891-2
30	**1.065** [27.05]	104891-3
40	**1.315** [33.82]	104891-4
50	**1.565** [39.75]	104891-5
60	**1.815** [46.10]	104891-6
70	**2.065** [52.45]	104891-7
80	**2.315** [58.80]	104891-8
100	**2.815** [71.50]	1-104891-0

Note: Terminating covers must be purchased separately, two are required for each cable connector.

Note: All part numbers are RoHS compliant.

Catalog 82012
Revised 4-12

www.te.com

Dimensions are shown for reference purposes only. Specifications subject to change.

Dimensions are in inches and millimeters unless otherwise specified.
USA: +1 (800) 522-6752

Canada: +1 (905) 475-6222
Mexico/C. Am.: +52 (0) 55-1106-0800
Latin/S. Am.: +54 (0) 11-4733-2200
Germany: +49 (0) 6251-133-1999
UK: +44 (0) 800-267666
France: +33 (0) 1-3420-8686
Netherlands: +31 (0) 73-6246-999
China: +86 (0) 400-820-6015

Application Tooling for Cable Connectors

The Manual Miniature Application Frame Assembly 91295-1, equipped with a Cover Closing Kit 543518-1, is used for the IDC termination of ribbon cable to the cable connectors shown on page 26.

Prior to termination, the covers must be partially assembled onto a connector housing, the cable inserted between the covers and contacts and the covers preclosed by hand, clamping the cable in place.

In the Manual Miniature Application Frame Assembly, the covers are fully seated to complete the mass termination and provide strain relief for the completed connection.

For tooling information, call Technical Support Center **1-800-522-6752.**

Manual Miniature Application Frame Assembly 91295-1 with Cover Closing Kit 543518-1

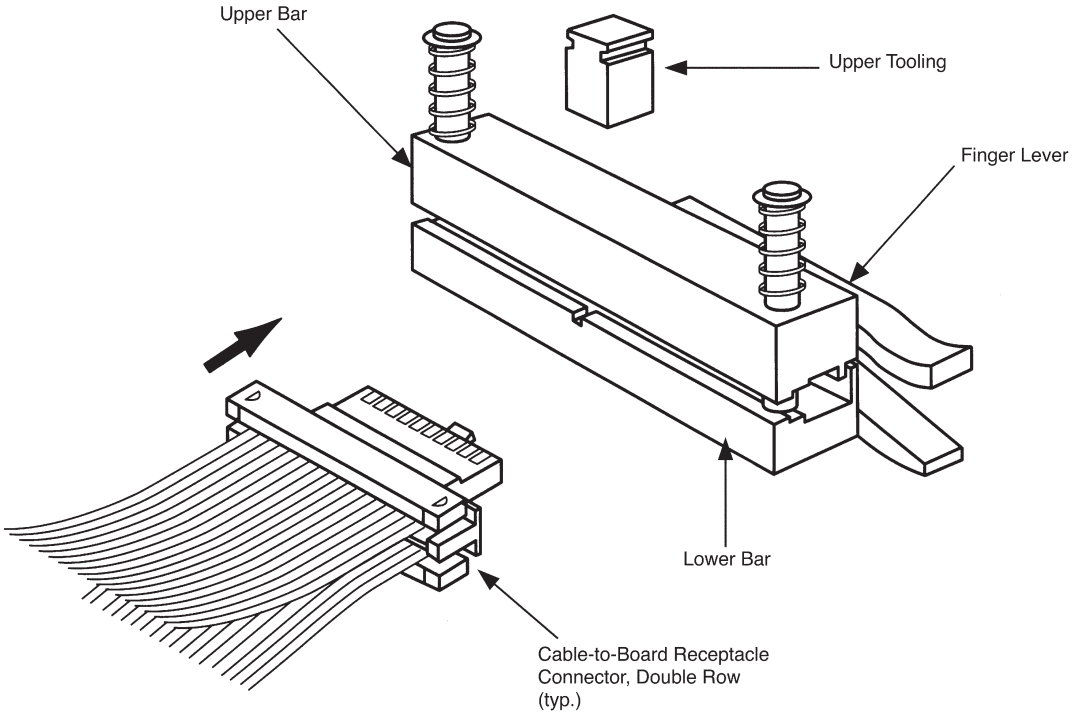

Note: Refer to TE Instruction Sheets 408-9817 (Frame Assembly 91295-1) and 408-9909 (Cover Closing Kit 543518-1) for complete termination/tooling information.

Note: All part numbers are RoHS compliant.

Catalog 82012
Revised 4-12

www.te.com

Dimensions are shown for reference purposes only. Specifications subject to change.

Dimensions are in inches and millimeters unless otherwise specified.
USA: +1 (800) 522-6752

Canada: +1 (905) 475-6222
Mexico/C. Am.: +52 (0) 55-1106-0800
Latin/S. Am.: +54 (0) 11-4733-2200
Germany: +49 (0) 6251-133-1999

UK: +44 (0) 800-267666
France: +33 (0) 1-3420-8686
Netherlands: +31 (0) 73-6246-999
China: +86 (0) 400-820-6015

Performance Specifications

Board-to-Board Connectors, Vertical and Right-Angle

Mating Force — 6.4 oz (1.78 N] max. per contact
Unmating Force — 1.0 oz [0.28 N] min. per contact
Durability — Tested to 200 cycles min.
Current Rating — (30°C T rise): .5 ampere per contact
Operating Temperature Range — -65°C to +105°C
Termination Resistance — 16 milliohms max. (initial)
Insulation Resistance — 5000 megohms min. (initial)
Dielectric Withstanding Voltage — 300 VAC

Cable-to-Board Connectors

Mating Force — 6.4 oz (1.78 N] max. per contact
Unmating Force Without Latch — .5 oz [0.14 N] min. per contact
Durability — Tested to 200 cycles min.
Current Rating — (10°C T rise); .5 ampere per contact
Operating Temperature Range — -65°C to +105°C
Termination Resistance — 25 milliohms max. (initial and final)
Insulation Resistance — 5000 megohms min. (initial)
Dielectric Withstanding Voltage — 300 VAC

Technical Documents

Various technical documents are available for your use:

Product Specifications describe technical performance characteristics and verification tests. They are intended for the Design, Component and Quality Engineer.

108-1332	AMPMODU 50/50 Grid Vertical Board-to-Board Connectors
108-1443	AMPMODU 50/50 Grid Right-Angle Board-to-Board and Cable Connectors

Application Specifications describe requirements for using the product in its intended application and/or crimping information. They are intended for the Packaging and Design Engineer and the Machine Setup Person.

114-7010	AMPMODU 50/50 Grid Connector System

Instruction Sheets provide instructions for assembling or applying the product. They are intended for the Manufacturing Assembler or Operator.

408-9817	Manual Miniature Application Frame Assembly 91295-1
408-9909	Cover Closing Kit 543518-1

Note: All part numbers are RoHS compliant.

Dimensions are shown for reference purposes only. Specifications subject to change.

Dimensions are in inches and millimeters unless otherwise specified.
USA: +1 (800) 522-6752

Canada: +1 (905) 475-6222
Mexico/C. Am.: +52 (0) 55-1106-0800
Latin/S. Am.: +54 (0) 11-4733-2200
Germany: +49 (0) 6251-133-1999

UK: +44 (0) 800-267666
France: +33 (0) 1-3420-8686
Netherlands: +31 (0) 73-6246-999
China: +86 (0) 400-820-6015

Micro-MaTch Miniature Connector System

Features/ Benefits

- **Available in 2 to 20 positions**
- **Applicable Wire: 20~28 AWG**
- **Wire connectors supplied on-tape and suitable for mass termination of 28 AWG [0.08 mm² to 0.09 mm²] ribbon cable**
- **Tin plated contact design**
- **Guaranteed minimum contact force of 2.0 N**
- **Fretting corrosion proof thanks to additional positioning spring member**
- **Full range of application tooling from hand tool to fully automated equipment**

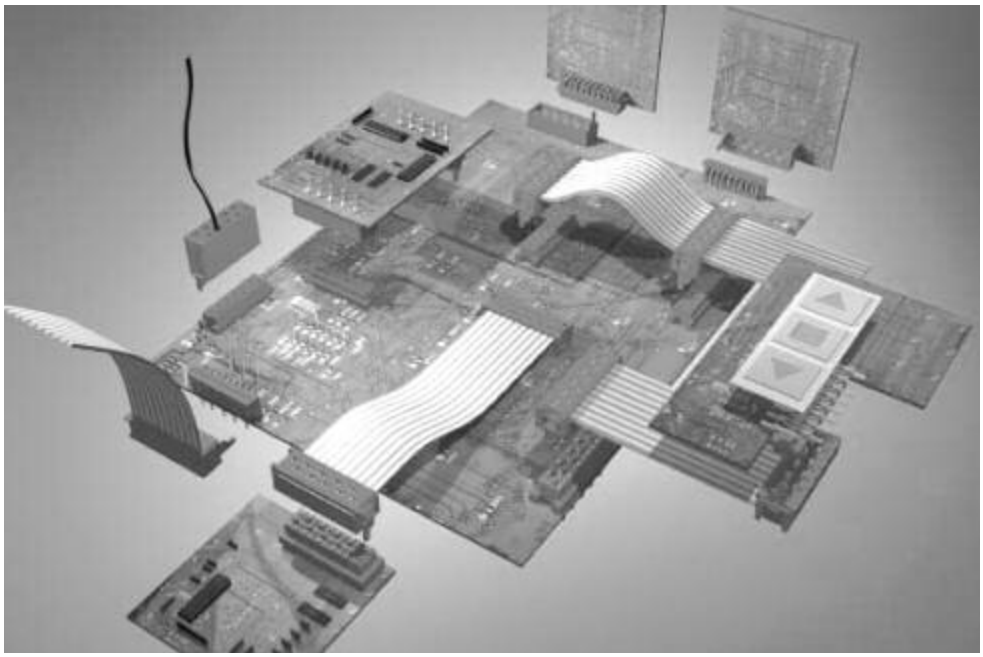

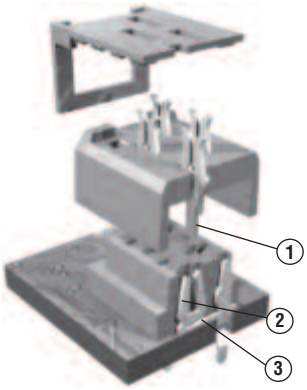

1. Contact Pin

2. Contact Spring

3. Positioning

Miniaturization and the trend towards higher density of electronic functions on a substrate led to the introduction of smaller interconnection systems. The Micro-MaTch connector family, with it's contact spacing of 1.27 mm, fully complies with the electronic packaging requirements of today and the future. The system offers a range of board and wire connectors, enabling a variety of wire-to-board and board-to-board interconnections.
The Micro-MaTch contact concept shown on this page is essentially different from other systems available.

By its design the traditional failure mode in tin plated connections, fretting corrosion, is prevented. Due to an additional positioning spring in the female part, relative movements caused by vibrations/thermal expansion between male and female contacts are absorbed. By preventing movements on the contact spot, a gas tight connection can be guaranteed under all circumstances.

The contact spring is located in the board connector and not in the cable connector, which is usually the case. The counter part, incorporated in the cable connector, is a simple pin, either with an insulation displacement section, suitable for the mass-termination of cable or with a kinked solder leg to be soldered onto a PC Board. The separation of these two basic functions of the contact system — contact force generation and wire termination — enables the independent optimization of both functions and also leads to relatively simple contact shapes.

Because of their shapes contacts can be post-plated, leaving no bare edges in the contact and wire slot area. The contact spring system features an additional spring member — the positioning spring — which compensates positional tolerances. In this way the contact spring can be fully optimized for its basic function, so that the relatively high contact force, required for tin plated contact systems, can be guaranteed under all circumstances.

The Micro-MaTch contact spring system is absolutely fretting corrosion proof by its design.

Catalog 82012
Revised 4-12

www.te.com

Dimensions are shown for reference purposes only. Specifications subject to change.

Dimensions are in inches and millimeters unless otherwise specified.
USA: +1 (800) 522-6752

Canada: +1 (905) 475-6222
Mexico/C. Am.: +52 (0) 55-1106-0800
Latin/S. Am.: +54 (0) 11-4733-2200
Germany: +49 (0) 6251-133-1999

UK: +44 (0) 800-267666
France: +33 (0) 1-3420-8686
Netherlands: +31 (0) 73-6246-999
China: +86 (0) 400-820-6015

Micro-MaTch Miniature Connector System Overview Technical Data

Technical Data

Centerline:	1.27 mm (staggered)
Number of Positions:	4, 6, 8, 10, 12, 14, 16, 18, 20, and some 24 positions
Contact Material:	Phosphor bronze
Contact Finish:	Tin over Nickel
Housing Material:	Thermoplastic polyester, red, glass-filled For surface mount versions polyamide 4.6
Flammability rating:	per UL 94 V-0
UL-recognized:	File E28476 Vol. 23 Section 4
Contact Resistance:	10 MΩ max.
Insulation Resistance:	1.000 MΩ min.
Nominal Voltage:	230 V
Current Rating:	1.5 A max.
Temperature Range:	-40° C to +105° C (operating)
Mating Force:	5N max. per contact
Unmating Force:	1N min. per contact
Minimum Contact Force:	2N min.
Product Specification:	108-19052
Application Specification:	114-19016, 114-19051
RoHS Compliance Code:	Always RoHS compliant (directive 2002/95/EC) for all types
Lead-free Process Capable:	Wave solder capable to 265° C for through hole versions reflow solder capable to 260° C for SMD versions

PC Board Connectors

PC Board Thickness:	1.6 mm nominal
PC Board Hole Diameter:	0.8 mm for solder connectors

Ribbon Connectors

Cable Type:	Ribbon cable, UL Style 2651
Conductor Spacing:	1.27 mm (.050")
Conductor Diameter:	Solid 0.30 mm diameter Stranded 0.08 mm^2 7 x 0.12 - 0.13 mm (other diameters and/or configurations on request)
Insulation Type:	semi-rigid PVC
Insulation Diameter:	0.9 ± 0.1 mm

Discrete Wire (COSI) Connectors

Cable Type :	AWG 28-24 and 24-20

Catalog 82012
Revised 4-12

www.te.com

Dimensions are shown for reference purposes only. Specifications subject to change.

Dimensions are in inches and millimeters unless otherwise specified.
USA: +1 (800) 522-6752

Canada: +1 (905) 475-6222
Mexico/C. Am.: +52 (0) 55-1106-0800
Latin/S. Am.: +54 (0) 11-4733-2200
Germany: +49 (0) 6251-133-1999

UK: +44 (0) 800-267666
France: +33 (0) 1-3420-8686
Netherlands: +31 (0) 73-6246-999
China: +86 (0) 400-820-6015

Micro-MaTch Miniature Connector System Applications (3 Dimensions)

Male Connectors / Female Connectors	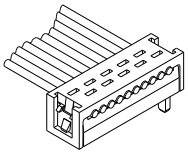 Male-on-Wire Part Number 215083	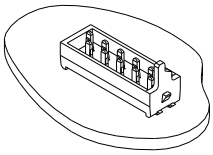 Male-on-Board Part Number 215464	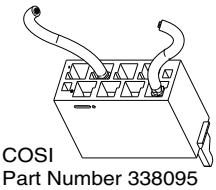 COSI Part Number 338095 Part Number 338096 Part Number 338097	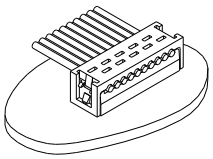 Paddle Board Part Number 215570
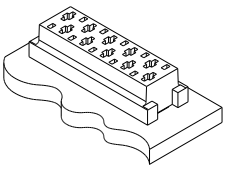 Female Top Entry Part Number 215079	1 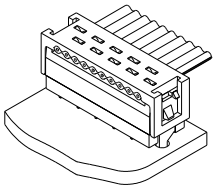	2 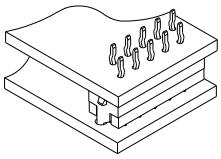	3 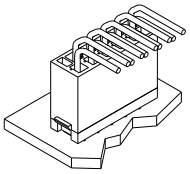	
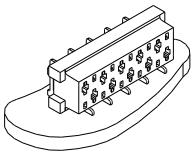 Female Side Entry Part Number 215460	4 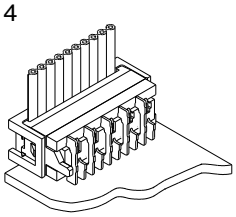	5/6 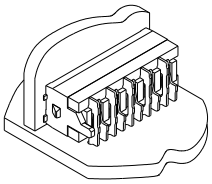	7 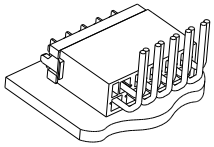	
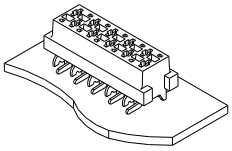 SMD Top Entry Part Number 188275	8 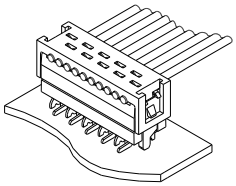	9 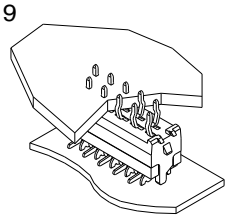	10 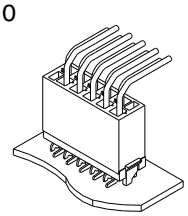	

Image	Description (see also page 33)
1	Wire-to-Board through hole
2	Board-to-Board through hole
3	Wire-to-Board (discrete wire), through hole
4	Wire-to-Board right angle, through hole
5	Board-to-Board right angle, through hole
6	Board-to-Board right angle, through hole
7	Wire-to-Board right angle (discrete wire), through hole
8	Wire-to-Board surface mount
9	Board-to-Board surface mount, through hole
10	Wire-to-Board (discrete wire), surface mount

Catalog 82012
Revised 4-12

www.te.com

Dimensions are shown for reference purposes only. Specifications subject to change.

Dimensions are in inches and millimeters unless otherwise specified.
USA: +1 (800) 522-6752

Canada: +1 (905) 475-6222
Mexico/C. Am.: +52 (0) 55-1106-0800
Latin/S. Am.: +54 (0) 11-4733-2200
Germany: +49 (0) 6251-133-1999

UK: +44 (0) 800-267666
France: +33 (0) 1-3420-8686
Netherlands: +31 (0) 73-6246-999
China: +86 (0) 400-820-6015

Micro-MaTch Miniature Connector System Applications (2 Dimensions)

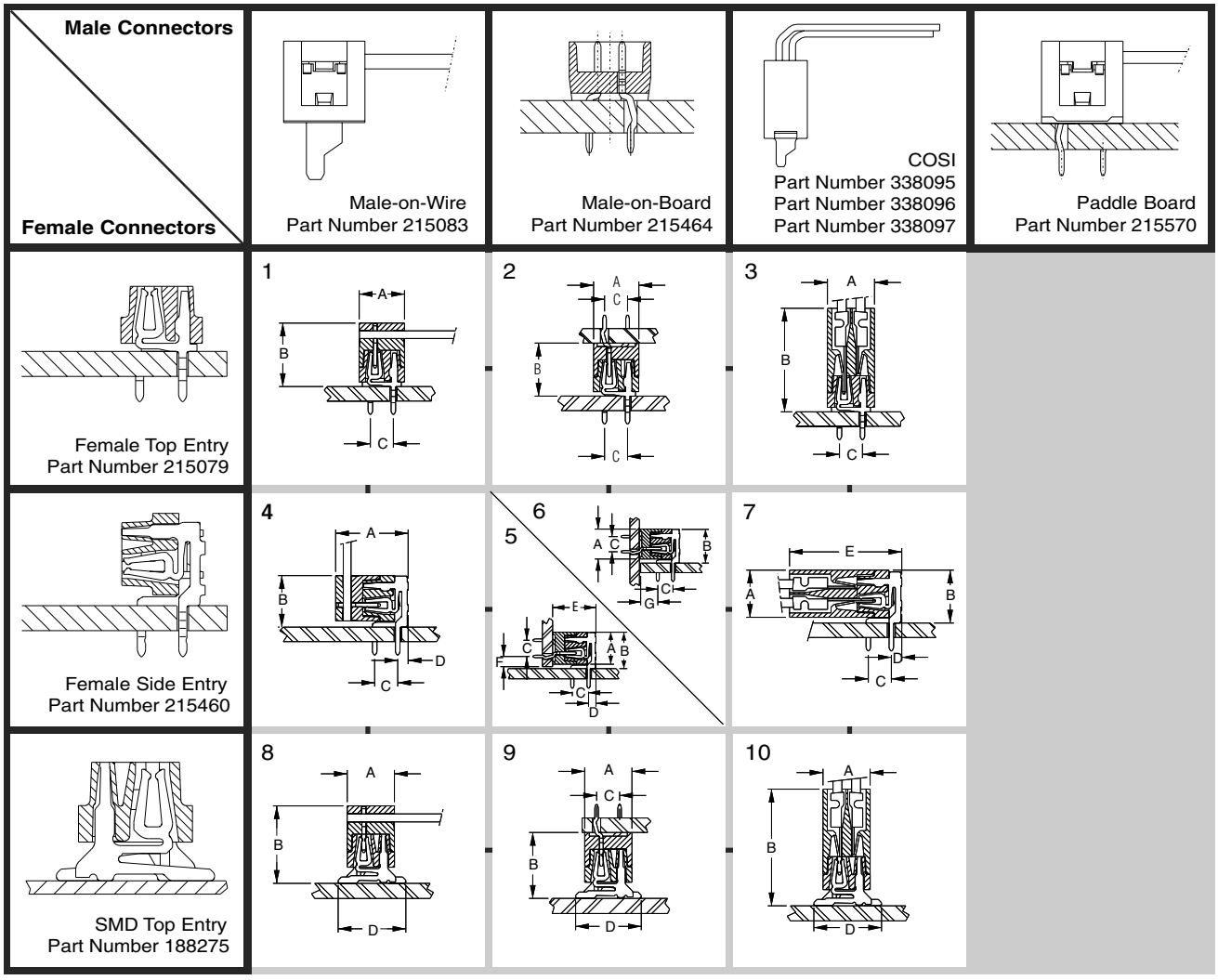

Image	Dimensions (mm)						
	A (max)	B (max)	C	D (max)	E (max)	F(max)	G (max)
1	5.2	7.5	2.54	—	—	—	—
2	5.2	6.2	2.54	—	—	—	—
3	5.2	9.7	2.54	—	—	—	—
4	8.4	5.9	2.54	1.5	—	—	—
5	5.2	5.9	2.54	1.5	7.0	1.6	—
6	5.2	5.9	2.54	1.5	—	—	2.8
7	5.2	5.9	2.54	1.5	10.6	—	—
8	5.2	8.5	—	7.1	—	—	—
9	5.2	7.1	2.54	7.1	—	—	—
10	5.2	10.7	—	7.1	—	—	—

Catalog 82012
Revised 4-12

www.te.com

Dimensions are shown for reference purposes only. Specifications subject to change.

Dimensions are in inches and millimeters unless otherwise specified.
USA: +1 (800) 522-6752

Canada: +1 (905) 475-6222
Mexico/C. Am.: +52 (0) 55-1106-0800
Latin/S. Am.: +54 (0) 11-4733-2200
Germany: +49 (0) 6251-133-1999

UK: +44 (0) 800-267666
France: +33 (0) 1-3420-8686
Netherlands: +31 (0) 73-6246-999
China: +86 (0) 400-820-6015

Micro-MaTch Miniature Connector System — Female-on-Board Connector, Top Entry

This connector version incorporates the patented Micro-MaTch contact spring system and is designed to be soldered onto PC Boards with a nominal thickness of 1.6 mm.

The solder legs are indented, providing firm retention of the connector before and during the soldering operations.

As polarization is accomplished directly between the Micro-MaTch male connectors and the PC Board, this top entry female connector does not have any polarizing features. Therefore, the orientation of the connector on the PC Board is irrelevant.

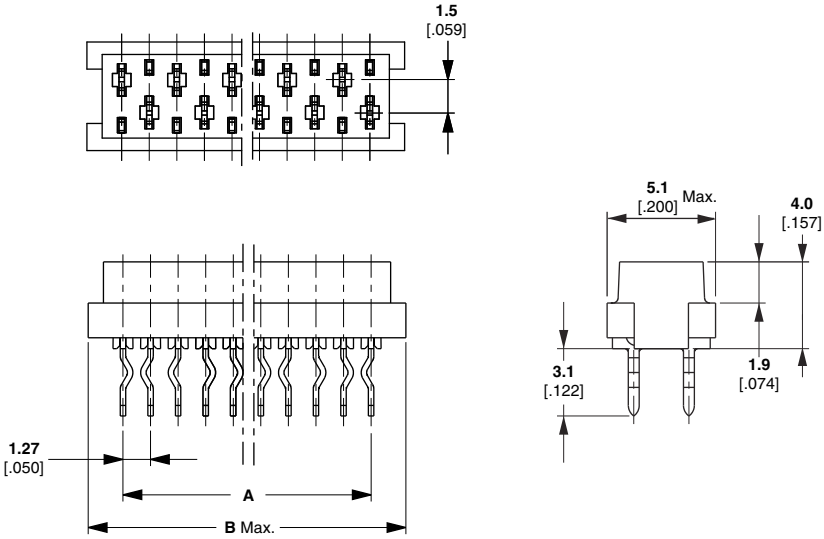

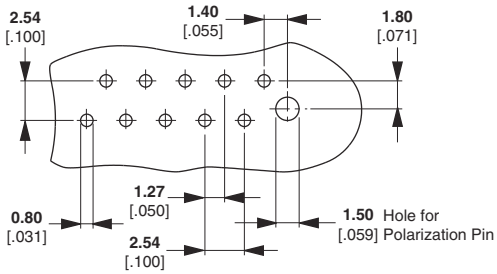

Typical Hole Pattern
Not Solder Side Shown

Notes:

1. Connectors are always sideways mounted onto an adhesive tape.
2. Standard packaging quantity is 2500 connectors on a reel with a diameter of 600 mm.
3. At additional charge a special packaging option is available: 250 connectors on a reel with a diameter of 250 mm, packed in a dedicated dispenser box.

Mates with:
X-338095-X
X-215083-X
X-215464-X
X-338728-X

No. of Positions	Dimensions (mm)		Part Numbers	
	A	B	2500 Connectors/Reel	250 Connectors/Box
4	3.81	7.1	215079-4	7-215079-4
6	6.35	9.7	215079-6	7-215079-6
8	8.89	12.2	215079-8	7-215079-8
10	11.43	14.7	1-215079-0	8-215079-0
12	13.97	17.3	1-215079-2	8-215079-2
14	16.51	19.8	1-215079-4	8-215079-4
16	19.05	22.4	1-215079-6	8-215079-6
18	21.59	24.9	1-215079-8	8-215079-8
20	24.13	27.4	2-215079-0	9-215079-0

Dimensions are shown for reference purposes only. Specifications subject to change.

Dimensions are in inches and millimeters unless otherwise specified.
USA: +1 (800) 522-6752

Canada: +1 (905) 475-6222
Mexico/C. Am.: +52 (0) 55-1106-0800
Latin/S. Am.: +54 (0) 11-4733-2200
Germany: +49 (0) 6251-133-1999

UK: +44 (0) 800-267666
France: +33 (0) 1-3420-8686
Netherlands: +31 (0) 73-6246-999
China: +86 (0) 400-820-6015

Micro-MaTch Miniature Connector System — Female-on-Board Connector, Side Entry

This connector version is identical to the top entry version with two exceptions:

- The solder legs are parallel to the mating face of the connector instead of perpendicular.
- It's housing is polarized, so that polarization is accomplished directly between the two mating connectors. Proper orientation of the connectors on the PC Board is relevant here.

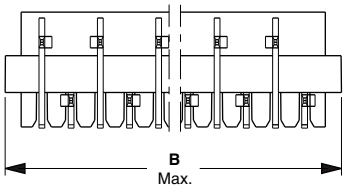

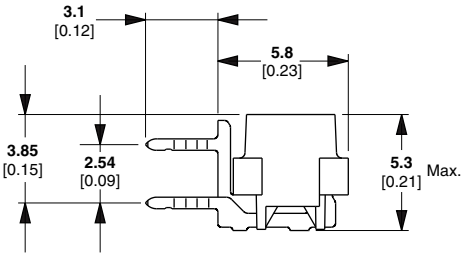

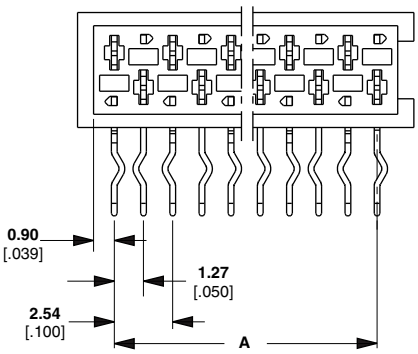

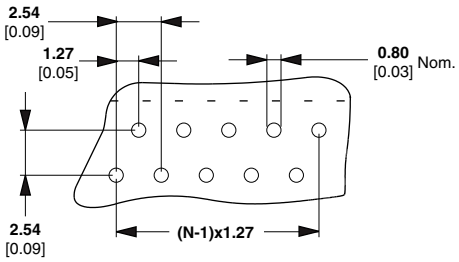

Recommended PCB Hole Layout
Not Solder Side Shown

Notes:

1. Connectors are always sideways mounted onto an adhesive tape.
2. Standard packaging quantity is 2500 connectors on a reel with a diameter of 600 mm.
3. At additional charge a special packaging option is available: 250 connectors on a reel with a diameter of 250 mm, packed in a dedicated dispenser box.

Mates with:

X-338095-X
X-215083-X
X-215464-X
X-338728-X

No. of Positions	Dimensions (mm)		Part Numbers	
	A	B	2500 Connectors/Reel	250 Connectors/Box
4	3.81	7.1	(1500) 215460-4	7-215460-4
6	6.35	9.7	215460-6	7-215460-6
8	8.89	12.2	215460-8	7-215460-8
10	11.43	14.7	1-215460-0	8-215460-0
12	13.97	17.3	1-215460-2	8-215460-2
14	16.51	19.8	1-215460-4	8-215460-4
16	19.05	22.4	1-215460-6	8-215460-6
18	21.59	24.9	1-215460-8	8-215460-8
20	24.13	27.4	2-215460-0	9-215460-0

Catalog 82012
Revised 4-12

www.te.com

Dimensions are shown for reference purposes only. Specifications subject to change.

Dimensions are in inches and millimeters unless otherwise specified.
USA: +1 (800) 522-6752

Canada: +1 (905) 475-6222
Mexico/C. Am.: +52 (0) 55-1106-0800
Latin/S. Am.: +54 (0) 11-4733-2200
Germany: +49 (0) 6251-133-1999

UK: +44 (0) 800-267666
France: +33 (0) 1-3420-8686
Netherlands: +31 (0) 73-6246-999
China: +86 (0) 400-820-6015

Micro-MaTch Miniature Connector System — Female-on-Board Connector Surface Mount Device (SMD)

This SMD connector version is designed for standard reflow and infrared solder processes ("FULL SMD"). Polarization is accomplished by the housing, therefor no polarization holes in the PC Board are required.

The contact is designed with an additional spring to compensate for differences in thermal expansion between housing and PCB. Due to this feature, tension on solder joints is prevented.

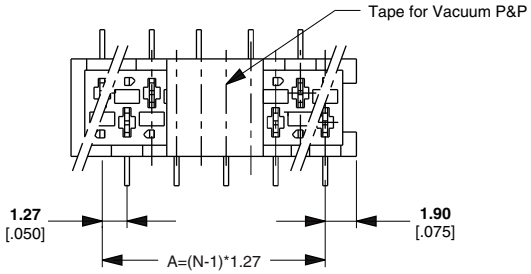

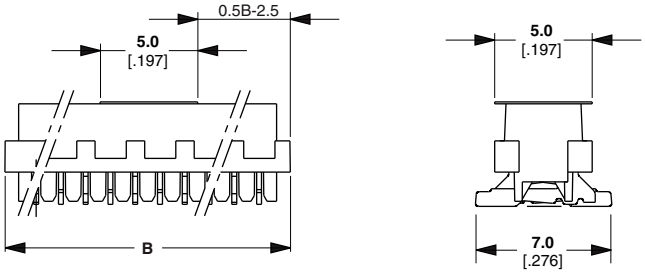

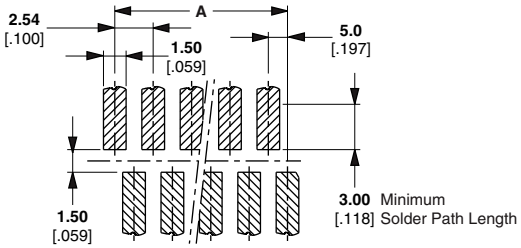

Recommended PCB Layout Top View

Notes:

1. To enable automatic Pick & Placement, connectors are always packed in embossed tape according EIA481 specification.
2. Standard packaging quantity is 900 pcs on a reel with a diameter of 330 mm.
3. Connectors are supplied with or without a feature for vacuum Pick & Placement.
4. For this connector no additional solder hold down is required.

Mates with:

X-338095-X
X-215083-X
X-215464-X
X-338728-X

No. of Positions	Dimensions (mm)		Part Numbers	
	A	B	2500 Connectors/Reel	250 Connectors/Box
4	3.81	7.1	188275-4	7-188275-4
6	6.35	9.7	188275-6	7-188275-6
8	8.89	12.2	188275-8	7-188275-8
10	11.43	14.7	1-188275-0	8-188275-0
12	13.97	17.3	1-188275-2	8-188275-2
14	16.51	19.8	1-188275-4	8-188275-4
16	19.05	22.4	1-188275-6	8-188275-6
18	21.59	24.9	1-188275-8	8-188275-8
20	24.13	27.4	2-188275-0	9-188275-0

Dimensions are shown for reference purposes only. Specifications subject to change.

Dimensions are in inches and millimeters unless otherwise specified.
USA: +1 (800) 522-6752

Canada: +1 (905) 475-6222
Mexico/C. Am.: +52 (0) 55-1106-0800
Latin/S. Am.: +54 (0) 11-4733-2200
Germany: +49 (0) 6251-133-1999

UK: +44 (0) 800-267666
France: +33 (0) 1-3420-8686
Netherlands: +31 (0) 73-6246-999
China: +86 (0) 400-820-6015

Micro-MaTch Miniature Connector System — Male-on-Board Connector

This male connector version is designed to be soldered onto PC Boards with a nominal thickness of 1.6 mm.

The solder legs are indented for firm retention of the connector in the PC Board.

The connector housing features a polarizing pin on one end for proper orientation of this connector version.

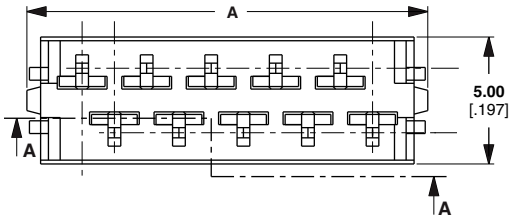

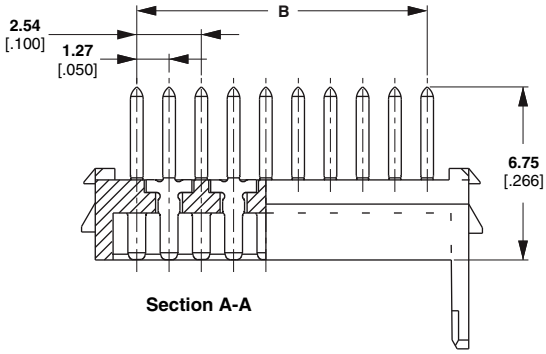

Section A-A

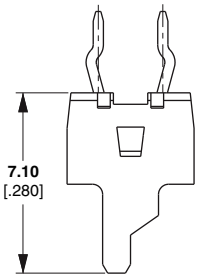

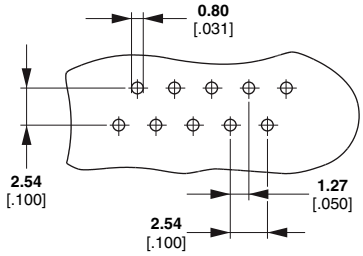

Typical Hole Pattern
Not Solder Side Shown

Notes:

1. To enable automatic Pick & Placement, connectors are always packed in embossed tape according EIA481 specification.
2. Standard packaging quantity is 900 pcs on a reel with a diameter of 330 mm.
3. Connectors are supplied with or without a feature for vacuum Pick & Placement.
4. For this connector no additional solder hold down is required.

Mates with:

X-338095-X
X-215083-X
X-215464-X
X-338728-X

No. of Positions	Dimensions (mm)		Part Numbers	
	A	B	2500 Connectors/Reel	250 Connectors/Box
4	3.81	8.2	215464-4	7-215464-4
6	6.35	10.7	215464-6	7-215464-6
8	8.89	13.3	215464-8	7-215464-8
10	11.43	15.8	1-215464-0	8-215464-0
12	13.97	18.3	1-215464-2	8-215464-2
14	16.51	20.8	1-215464-4	8-215464-4
16	19.05	23.4	1-215464-6	8-215464-6
18	21.59	25.9	1-215464-8	8-215464-8
20	24.13	28.4	2-215464-0	9-215464-0

Dimensions are shown for reference purposes only. Specifications subject to change.

Dimensions are in inches and millimeters unless otherwise specified.
USA: +1 (800) 522-6752

Canada: +1 (905) 475-6222
Mexico/C. Am.: +52 (0) 55-1106-0800
Latin/S. Am.: +54 (0) 11-4733-2200
Germany: +49 (0) 6251-133-1999

UK: +44 (0) 800-267666
France: +33 (0) 1-3420-8686
Netherlands: +31 (0) 73-6246-999
China: +86 (0) 400-820-6015

Micro-MaTch Miniature Connector System — Male-on-Wire Connector

For the wire connection, a well-known type blade with a single slot is used. The insides of the slots are tin plated for stable and reliable connections.

The connector is supplied with a pre-assembled cover, providing excellent positioning of the ribbon cable before and during the insulation displacement process.

After termination the cover is held in place by each individual contact in addition to two plastic latches at both ends of the connector.

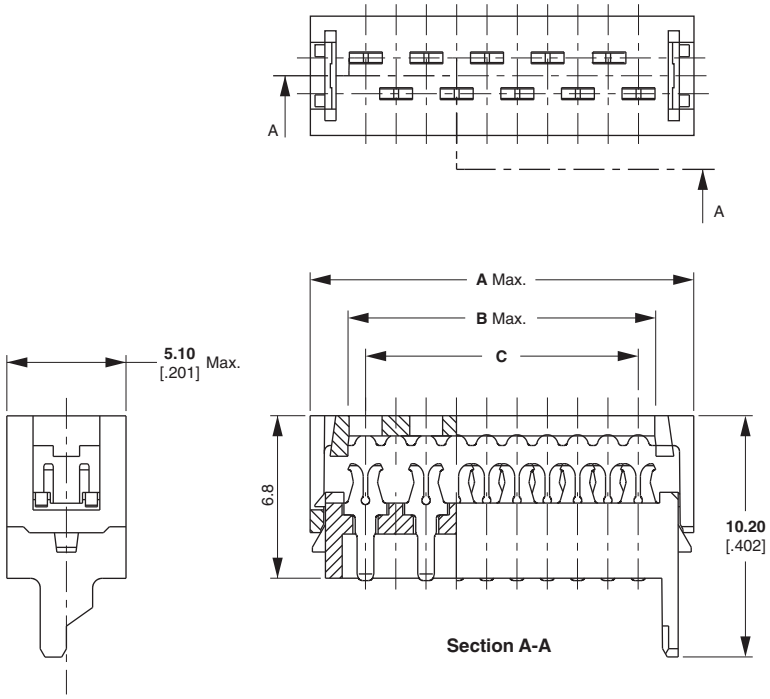

Remark:
The Micro-MaTch Male-on-Wire connector is specifically designed to be disengaged from its counterpart by pulling the cable in the appropriate direction.

Notes:
1. Connectors are always sideways mounted onto an adhesive tape.
2. Standard packaging quantity is 2500 connectors on a reel with a diameter of 600 mm.
3. At additional charge a special packaging option is available: 250 diameter of 250 mm, packed in a dedicated dispenser box.

Mates with:
- X-215079-X
- X-215460-X
- X-188275-X
- X-215079-X
- X-338068-X
- X-338069-X
- X-338070-X
- X-100411-X
- X-188431-X

No. of Positions	Dimensions (mm)			Part Numbers	
	A	B	C	2500 Connectors/Reel	250 Connectors/Box
4	8.6	5.4	3.81	215083-4	7-215083-4
6	11.1	8.0	6.35	215083-6	7-215083-6
8	3.6	10.5	8.89	215083-8	7-215083-8
10	16.2	13.0	11.43	1-215083-0	8-215083-0
12	18.7	15.6	13.97	1-215083-2	8-215083-2
14	21.3	18.1	16.51	1-215083-4	8-215083-4
16	23.8	20.7	19.05	1-215083-6	8-215083-6
18	26.3	23.2	21.59	1-215083-8	8-215083-8
20	28.9	25.7	24.13	2-215083-0	9-215083-0
24	34.0	30.8	29.21	2-215083-4	9-215083-4

Dimensions are shown for reference purposes only. Specifications subject to change.

Dimensions are in inches and millimeters unless otherwise specified.
USA: +1 (800) 522-6752

Canada: +1 (905) 475-6222
Mexico/C. Am.: +52 (0) 55-1106-0800
Latin/S. Am.: +54 (0) 11-4733-2200
Germany: +49 (0) 6251-133-1999

UK: +44 (0) 800-267666
France: +33 (0) 1-3420-8686
Netherlands: +31 (0) 73-6246-999
China: +86 (0) 400-820-6015

Micro-MaTch Miniature Connector System — Paddle Board Connector

Direct soldering of a ribbon cable onto a PC Board is a very difficult job with the smaller sizes of ribbon cable. If such a permanent cable connection is required, the application can be facilitated by using this connector type.

The Paddle Board connector is applied to the ribbon cable with the same application tooling, available for the termination of the Male-on-Wire connector.

The solder legs are indented and provide mechanical retention of the connector/cable assembly in the PC Board before and during soldering.

This Paddle Board connector version is designed to be soldered onto PC Boards with a nominal thickness of 1.6 mm.

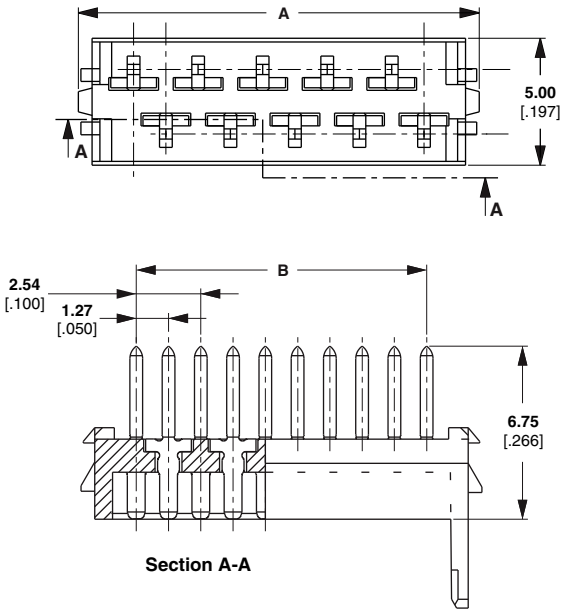

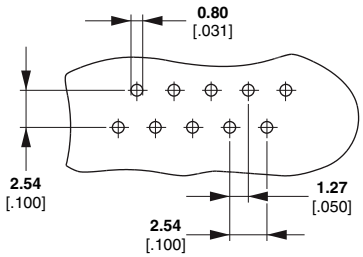

Typical Hole Pattern
Not Solder Side Shown

Notes:

1. To enable automatic Pick & Placement, connectors are always packed in embossed tape according EIA481 specification.
2. Standard packaging quantity is 900 pcs on a reel with a diameter of 330 mm.
3. Connectors are supplied with or without a feature for vacuum Pick & Placement.
4. For this connector no additional solder hold down is required.

No mate — direct soldering of ribbon cable onto the PC Board

No. of Positions	Dimensions (mm)			Part Numbers	
	A	B	C	2500 Connectors/Reel	250 Connectors/Box
4	8.6	5.4	3.81	215570-4	7-215570-4
6	11.1	8.0	6.35	215570-6	7-215570-6
8	3.6	10.5	8.89	215570-8	7-215570-8
10	16.2	13.0	11.43	1-215570-0	8-215570-0
12	18.7	15.6	13.97	1-215570-2	8-215570-2
14	21.3	18.1	16.51	1-215570-4	8-215570-4
16	23.8	20.7	19.05	1-215570-6	8-215570-6
18	26.3	23.2	21.59	1-215570-8	8-215570-8
20	28.9	25.7	24.13	2-215570-0	9-215570-0
24	34.0	30.8	29.21	2-215570-4	—

Dimensions are shown for reference purposes only. Specifications subject to change.

Dimensions are in inches and millimeters unless otherwise specified.
USA: +1 (800) 522-6752

Canada: +1 (905) 475-6222
Mexico/C. Am.: +52 (0) 55-1106-0800
Latin/S. Am.: +54 (0) 11-4733-2200
Germany: +49 (0) 6251-133-1999

UK: +44 (0) 800-267666
France: +33 (0) 1-3420-8686
Netherlands: +31 (0) 73-6246-999
China: +86 (0) 400-820-6015

Micro-MaTch Miniature Connector System — Crimp On Snap In (COSI) Connector

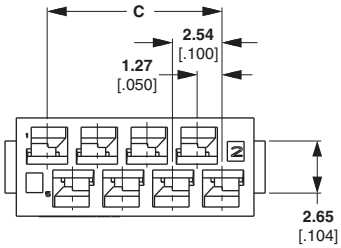

Basic Part Number 338095 and Contacts Part Numbers 338096 and 338097

This crimp version for discrete Wire-to-Board applications is fully compatible with all female connectors of the Micro-MaTch family.

Insulation and wire crimp barrel are copies of the well proven AMPLIMITE contacts. After mating with a Micro-MaTch female connector the contacts are fully protected by isolating plastics. Contacts are made of a pre-tinned phosphor bronze.

Contacts are supplied in a range for 24-20 AWG and 28-24 AWG. For repair operations an extraction tool is available; Part Number 734873-1.

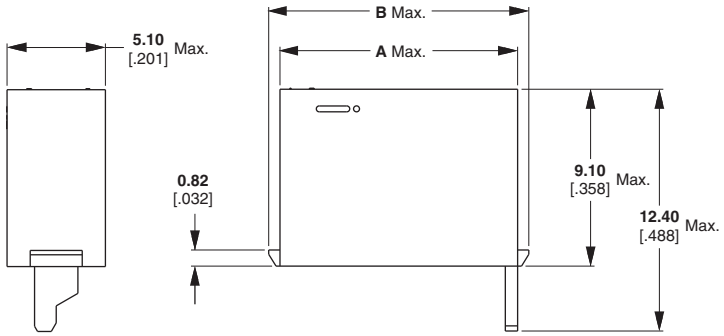

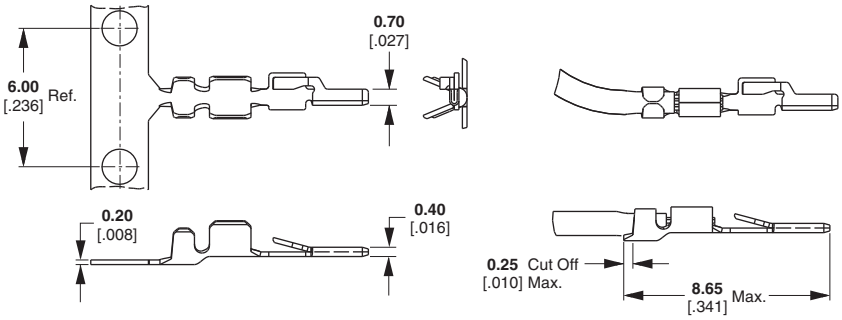

Notes:

1. Contacts can be crimped using a G-terminator or mini stripper crimper based applicator.
2. For the contacts on strip the standard packaging quantity is 15.000 pcs on a reel with a diameter of 600 mm.
3. For repair/service contacts are packaged 750 pcs. Per reel, to be used with handtools.
4. The housings are bulk packed in a box with a packaging quantity varying from 200 to 900 pcs per box.

Mates with:
X-338095-X

Wire Size Range (mm²)	Wire Size Range (AWG)	Insulation Diameter (mm)	Part Number: Large reel, 15.000	Part Number: Small reel, 750
0.08-0.20	28-24	0.76-1.00	338096-1	1-338096-1
0.20-0.50	24-20	1.27-1.52	338097-1	1-338097-1

Mates with:
X-215079-X
X-215460-X
X-188275-X
X-215079-X
X-338068-X
X-338069-X
X-338670-X
X-100411-X
X-188431-X

No. of Positions	Dimensions (mm) A	Dimensions (mm) B	Dimensions (mm) C	Part Numbers: 2500 Connectors/Reel	Part Numbers: 250 Connectors/Box
4	7.2	8.4	3.81	338095-4	900
6	9.8	10.9	6.35	338095-6	700
8	12.3	13.5	8.89	338095-8	500
10	14.9	16.0	11.43	1-338095-0	450
12	17.4	18.5	13.97	1-338095-2	400
14	19.9	21.1	16.51	1-338095-4	350
16	22.5	23.6	19.05	1-338095-6	300
18	25.0	26.2	21.59	1-338095-8	250
20	27.6	28.7	24.13	2-338095-0	200

Dimensions are shown for reference purposes only. Specifications subject to change.

Dimensions are in inches and millimeters unless otherwise specified.
USA: +1 (800) 522-6752

Canada: +1 (905) 475-6222
Mexico/C. Am.: +52 (0) 55-1106-0800
Latin/S. Am.: +54 (0) 11-4733-2200
Germany: +49 (0) 6251-133-1999

UK: +44 (0) 800-267666
France: +33 (0) 1-3420-8686
Netherlands: +31 (0) 73-6246-999
China: +86 (0) 400-820-6015

Micro-MaTch Miniature Connector System — Specials

SMC Connector Part Number 100411

This connector type enables a solderless application to the printed circuit board. Contact is made on the surface of the PCB, enabling the use of paperphenol and epoxy boards with both drilled and punched holes. This connector is suitable for both Wire-to-Board as Board-to-Board connections. Because this connector is mounted on the solder side, the components of both PCB's in a parallel Board-to-Board application, will be in the same direction. By this, the stacking of two or more PCB's is possible. Application tooling available on request.

Mates with: **X-215464-X** **X-215083-X** **X-338095-X**

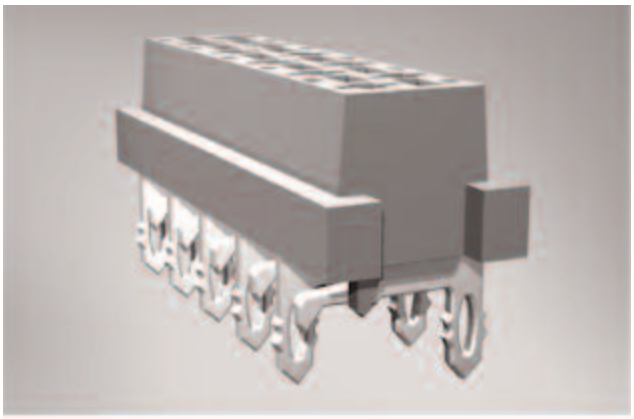

Locking Latch Part Numbers 338068/338069/338070

For Wire-to-Board applications this feature provides an audible click during mating. This feature is available for the standard Micro-MaTch female connectors. Cross reference is made by base part number x-338068-x instead of x-215079-x, x-338069-x instead of x-188275-x and x-338070-x instead of x-215460-x (standard large reel packaging only).

Mates with: **X-338095-X** **X-338728-X** **X-215464-X** **X-215083-X**

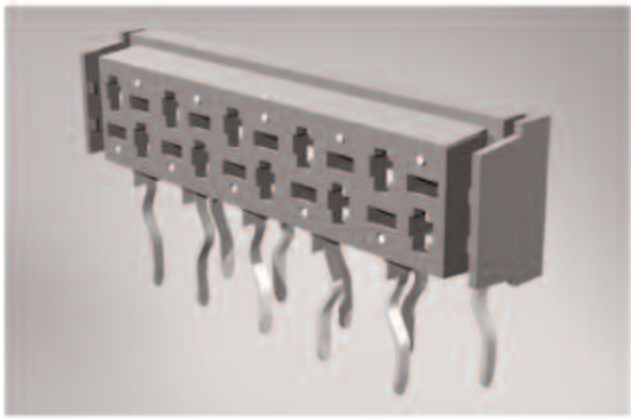

In-board SMD Part Number 188431

This connector is only tooled in 20 position (9-188431-0) and packaged in embossed tape according to EIA481 standards. The connectors are equipped with a feature for vacuum Pick & Placement. It enables the mounting of a PCB with the solder side direct behind e.g. a display. It is also possible to obtain a parallel BTB application with an extreme low PCB distance of 4.2 mm.

Mates with: **X-338095-X** **X-338728-X** **X-215464-X** **X-215083-X**

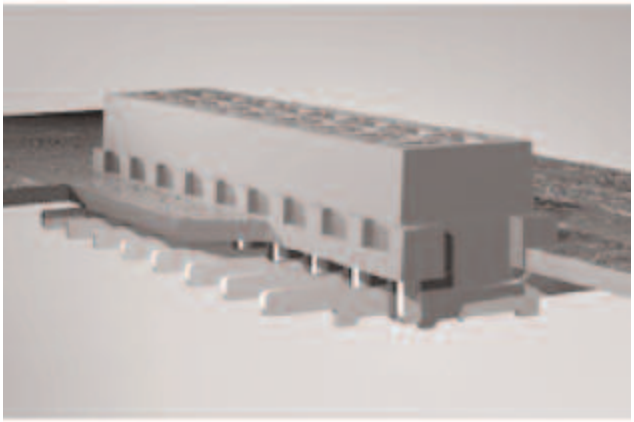

Male SMD Part Number 338728

This connector enables the possibility to have a full SMD to SMD Board-to-Board application. It mates with all Micro-MaTch female connectors, and will be packaged according EIA 481 standard. Consult TE for more information.

Mates with: **X-215079-X** **X-338070-X** **X-215460-X** **X-188431-X** **X-188275-X** **X-338068-X** **X-338069-X**

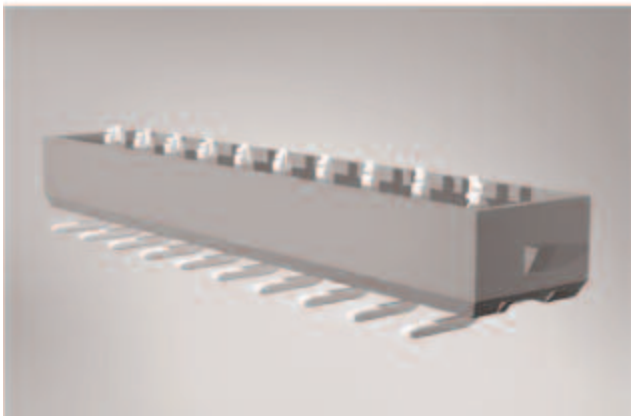

Dimensions are shown for reference purposes only. Specifications subject to change.

Dimensions are in inches and millimeters unless otherwise specified.
USA: +1 (800) 522-6752

Canada: +1 (905) 475-6222
Mexico/C. Am.: +52 (0) 55-1106-0800
Latin/S. Am.: +54 (0) 11-4733-2200
Germany: +49 (0) 6251-133-1999

UK: +44 (0) 800-267666
France: +33 (0) 1-3420-8686
Netherlands: +31 (0) 73-6246-999
China: +86 (0) 400-820-6015

Micro-MaTch Miniature Connector System Application Tooling

Pistol Handgrip Tooling. This is a handtool for terminating Micro-MaTch Male-on-Wire and Paddle Board connectors. Meant for small quantities or repair services. Pistol handgrip and adapter must be ordered separately.

Standard Pistol Handgrip Part Number 734155-1. This basic tool can be used for Micro-MaTch and other applications.

Pistol Handgrip Adapter Set Part Number 734024-1. This adapter can be used for Micro-MaTch terminations, together with the pistol handgrip.

Bench Press Tooling Part Number 733280-3. This complete tool includes a Micro-MaTch dedicated tool set mounted on the bench press 654173-2.

Bench Press Part Number 91085-2. This basic press is a hand operated version. This press can also be obtained in a pneumatically operated version; Part Number 91112-3.

Bench Press Tool Set Part Number 733278-2. This tool set is designed especially for Micro-MaTch. It fits both pneumatically and hand operated press.

COSI Hand Tooling Part Number 734870-1 for 24-20 AWG, and **Part Number 734870-2** for 28-24 AWG. These dedicated tools can be obtained for services/repair applications.

G-terminator Part Number 677-499-1.

Applicators for G-terminator. Part Number 677894-1 for AWG 28-24 (Part Number 338096-1) and **Part Number 677895-1** for AWG 24-20 (Part Number 338097-1).

Catalog 82012
Revised 4-12

www.te.com

Dimensions are shown for reference purposes only. Specifications subject to change.

Dimensions are in inches and millimeters unless otherwise specified.
USA: +1 (800) 522-6752

Canada: +1 (905) 475-6222
Mexico/C. Am.: +52 (0) 55-1106-0800
Latin/S. Am.: +54 (0) 11-4733-2200
Germany: +49 (0) 6251-133-1999

UK: +44 (0) 800-267666
France: +33 (0) 1-3420-8686
Netherlands: +31 (0) 73-6246-999
China: +86 (0) 400-820-6015

Micro-MaTch Miniature Connector System Application Tooling (Continued)

Semiautomatic Tooling Part Number 677410-1.
This tool can be used for Micro-MaTch lead end and for daisy chain assembly applications.

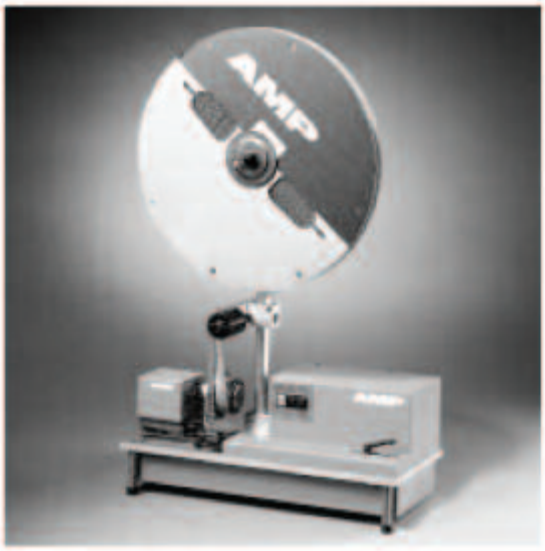

Semiautomatic Tooling Part Number 677412-5 for Micro-MaTch only and **Part Number 1-677412-0** for both Micro-MaTch and other ribbon cables. This machine can be used for lead end assemblies.

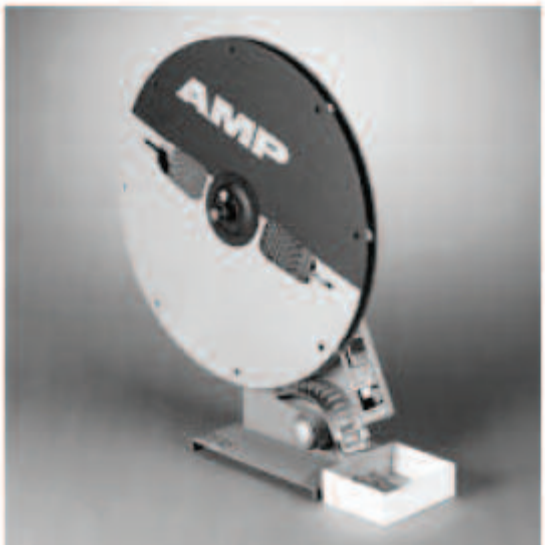

Connector Dispenser Part Number 677463-1.
The dispenser accepts the Micro-MaTch standard reels (2500 pcs/reel). It automatically removes the pre-set connector quantity from the reel and drops it in a separate box. Quantity can easily be programmed by the user.

Micro-MaTch Miniature Connector System Lead Assembly

It is possible to deliver custom made Micro-MaTch lead assemblies, both cable end assemblies and daisy-chain assemblies, in all positions between 4 and 20 in all required cable lengths. All leads are 100% electrically tested on shortcut and connection before shipment. A flexible 7 stranded cable is used for easy assembly. Special cable on request. For order information contact TE.

Micro-MaTch Miniature Connector System Sample Box

Sample Box
Part Number 1377074-1

This box includes samples of all connector types within the Micro-MaTch family, examples of leads, printed circuit boards and a CD-ROM. The CD-ROM includes an electronic version of this catalogue, an animation of the contact principle and CAD files of all connector types.

This sample box is an aid in visualizing the variety of applications where Micro-MaTch can be implemented.

Catalog 82012
Revised 4-12

www.te.com

Dimensions are shown for reference purposes only. Specifications subject to change.

Dimensions are in inches and millimeters unless otherwise specified.
USA: +1 (800) 522-6752

Canada: +1 (905) 475-6222
Mexico/C. Am.: +52 (0) 55-1106-0800
Latin/S. Am.: +54 (0) 11-4733-2200
Germany: +49 (0) 6251-133-1999

UK: +44 (0) 800-267666
France: +33 (0) 1-3420-8686
Netherlands: +31 (0) 73-6246-999
China: +86 (0) 400-820-6015

Universal I/O Pin Connectors without Mounting Ears

Material and Finish

Housing and Cover — Flame retardant UL 94V-0 rated thermoplastic, black

Contacts — Phosphor bronze, .000100 [0.00254] min. tin on termination end, .000030 [0.00762] min. gold on mating end, both over .000050 [0.00127] min. nickel

Technical Documents

Product Specification
108-1336

Application Specification
114-7011

Instruction Sheets
408-9720
408-6939

- **Recognized under the Component Program of the Underwriters Laboratories, Inc. UL File No. E28476**
- **Certified by the Canadian Standards Association, File No. LR 7189**

Accessories

Strain Relief — page 67

Ejector Latch — page 63

Military Polarizer — page 63

Terminates 26 and 28 AWG solid or stranded ribbon cable. See Application Specification for cable requirements.

Related Product Data

Mateable Receptacles Novo — pages 48-51

Female Socket Connectors — pages 52-55

Without Latches

With Latches

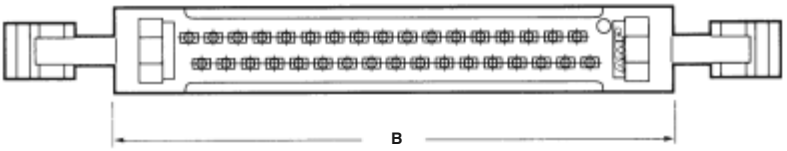

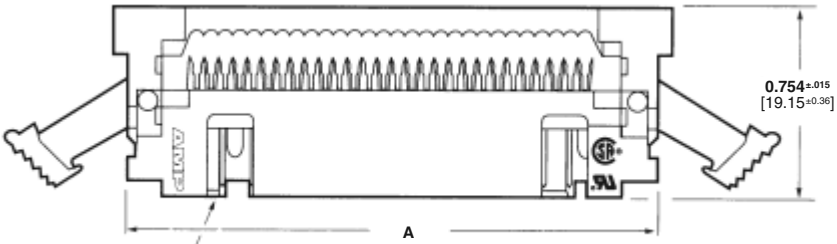

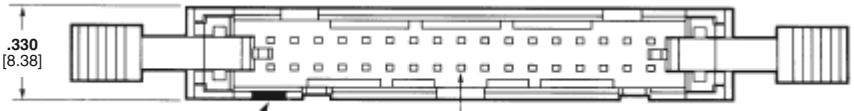

No. of Positions	Dimensions		Part Numbers of Connectors with:		
	A	B	No Latches	Short Latches[1]	Long Latches[2]
10[3,4]	**.992** 25.20	**1.072** 27.23	1-111446-4	1-111492-5	1-111504-4
14[3,4]	**1.192** 30.28	**1.272** 32.31	1-111446-5	1-111492-6	1-111504-5
16	**1.292** 32.82	**1.372** 34.85	1-111446-6	1-111492-7	1-111504-6
20	**1.492** 37.90	**1.572** 39.93	1-111446-8	—	1-111504-7
24	**1.692** 42.98	**1.772** 45.01	1-111446-9	1-111492-9	1-111504-8
26	**1.792** 45.52	**1.872** 47.55	2-111446-0	2-111492-0	—
30	**1.992** 50.60	**2.072** 52.63	2-111446-1	2-111492-1	2-111504-0
34	**2.192** 55.68	**2.272** 57.71	2-111446-2	2-111492-2	—
40	**2.492** 63.30	**2.572** 65.33	2-111446-3	2-111492-3	—
44	**2.692** 68.38	**2.772** 70.41	2-111446-4	2-111492-4	2-111504-3
50	**2.992** 76.00	**3.072** 78.03	1-111446-7	2-111492-5	—
60	**3.492** 88.70	**3.572** 90.73	2-111446-5	2-111492-6	—
64	**3.692** 93.78	**3.772** 95.81	2-111446-6	—	2-111504-6

[1] Use short latch versions when mating connectors without strain reliefs are used.
[2] Use long latch versions when mating connectors with strain reliefs are used.
[3] No slot on end with position No. 1 indicator for 10 and 14-position connectors.
[4] No slot for snap-in polarizer on end with position No. 1 indicator for 10 and 14-position connectors.

Note: All part numbers are RoHS compliant.

Dimensions are shown for reference purposes only. Specifications subject to change.

Dimensions are in inches and millimeters unless otherwise specified.
USA: +1 (800) 522-6752

Canada: +1 (905) 475-6222
Mexico/C. Am.: +52 (0) 55-1106-0800
Latin/S. Am.: +54 (0) 11-4733-2200
Germany: +49 (0) 6251-133-1999

UK: +44 (0) 800-267666
France: +33 (0) 1-3420-8686
Netherlands: +31 (0) 73-6246-999
China: +86 (0) 400-820-6015

Universal I/O Pin Connectors with Slotted Mounting Ears

Material and Finish

Housing and Cover — Flame retardant UL 94V-0 rated thermoplastic, black

Contacts — Phosphor bronze, .000100 [0.00254] min. tin on termination end, .000030 [0.00762] min. gold on mating end, both over .000050 [0.00127] min. nickel

Technical Documents

Product Specification
108-1336

Application Specification
114-7011

Instruction Sheets
408-9720
408-6939

- **Recognized under the Component Program of the Underwriters Laboratories, Inc. UL File No. E28476**
- **Certified by the Canadian Standards Association, File No. LR 7189**

Accessories

Ejector Latch — page 63

Military Polarizer — page 63

Terminates 26 and 28 AWG solid or stranded ribbon cable. See Application Specification for cable requirements.

Related Product Data

Mateable Receptacles Novo — pages 48-51

Female Socket Connectors — pages 52-55

Without Latches

With Latches

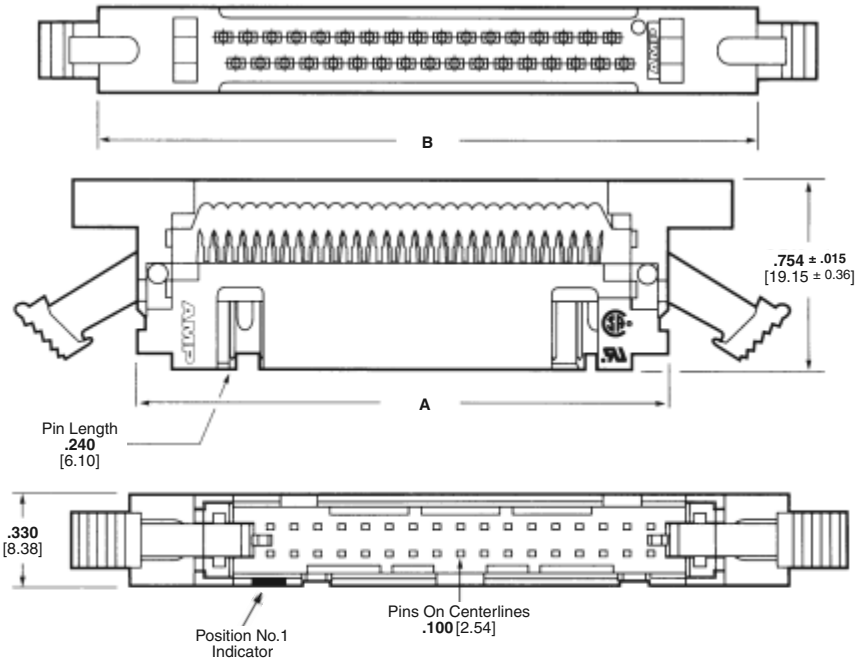

No. of Positions	Dimensions		Part Numbers of Connectors with:		
	A	B	No Latches	Short Latches[1]	Long Latches[2]
10[3,4]	**.992** 25.20	**1.476** 37.49	5111448-1	1-111494-5	1-111506-6
14[3,4]	**1.192** 30.28	**1.676** 42.57	—	—	—
16	**1.292** 32.82	**1.776** 45.11	5111448-3	—	1-111506-8
20	**1.492** 37.90	**1.976** 50.19	5111448-4	1-111494-8	—
24	**1.692** 42.98	**2.176** 55.27	5111448-5	1-111494-9	2-111506-0
26	**1.792** 45.52	**2.276** 57.81	—	—	2-111506-1
30	**1.992** 50.60	**2.476** 62.89	5111448-7	2-111494-0	—
34	**2.192** 55.68	**2.676** 67.97	5111448-8	2-111494-1	—
40	**2.492** 63.30	**2.976** 75.59	5111448-9	2-111494-2	2-111506-4
44	**2.692** 68.38	**3.176** 80.67	—	2-111494-3	2-111506-5
50	**2.992** 76.00	**3.476** 88.29	—	2-111494-4	1-111506-4
60	**3.492** 88.70	**3.976** 100.99	—	2-111494-5	—
64	**3.692** 93.78	**4.176** 106.07	1-5111448-3	2-111494-6	—

[1] Use short latch versions when mating connectors without strain reliefs are used.
[2] Use long latch versions when mating connectors with strain reliefs are used.
[3] No slot on end with position No. 1 indicator for 10 and 14-position connectors.
[4] No slot for snap-in polarizer on end with position No. 1 indicator for 10 and 14-position connectors.

Note: All part numbers are RoHS compliant.

Dimensions are shown for reference purposes only. Specifications subject to change.

Dimensions are in inches and millimeters unless otherwise specified.
USA: +1 (800) 522-6752

Canada: +1 (905) 475-6222
Mexico/C. Am.: +52 (0) 55-1106-0800
Latin/S. Am.: +54 (0) 11-4733-2200
Germany: +49 (0) 6251-133-1999

UK: +44 (0) 800-267666
France: +33 (0) 1-3420-8686
Netherlands: +31 (0) 73-6246-999
China: +86 (0) 400-820-6015

EUROLATCH Receptacles, 64-Position (Three-Row Housings, Two Rows Loaded)

Housing Assembly with Cover (Preassembled)

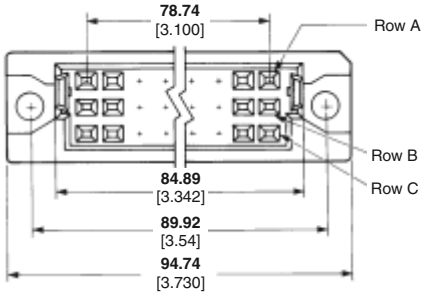

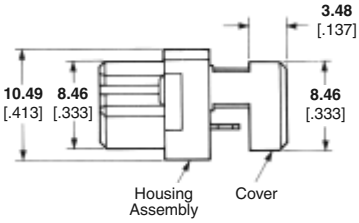

Material and Finish

Housing and Cover — UL 94V-0 rated thermoplastic, black

Contacts — Phosphor bronze, duplex plated 0.00076 [.000030] gold on post/pin mating end, 0.00254-0.00508 [.000100-.000200] tin on termination end, with entire contact underplated 0.00127 [.000050] nickel.

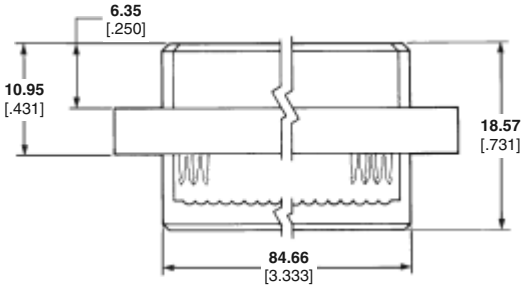

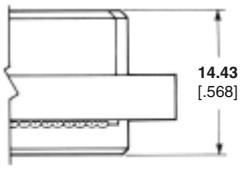

Terminated

Related Product Data

Mateable Pin Connectors — Eurocard Type C and Type R— Selection Guide 82650, See Catalog 82721

Ribbon Cable — Part Number 2-57040-2 or Part Number 2-57034-5 (64 conductor)

Application Tooling — pages 70-74

Technical Documents

Product Specifications
108-46003 EUROLATCH Receptacles
DIN 41612
IEC 603-2

Instruction Sheet
408-9156

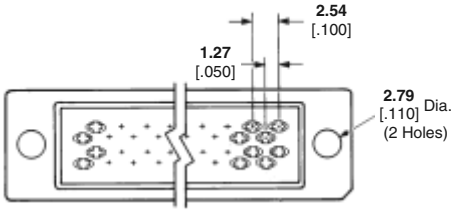

- **Recognized under the Component Program of the Underwriters Laboratories, Inc. UL File No. E28476**
- **Certified by the Canadian Standards Association, File No. LR 7189**

Contact Rows Loaded	Receptacle Kit No. (Preassembled)
A and C	746603-4

Note: All part numbers are RoHS compliant.

Novo Connectors

Product Facts

- **.100 x .100 [2.54 x 2.54] mating grid for .050 [1.27] pitch ribbon cable**
- **Tuning fork contact offers a military approved design, at an economical cost**
- **Polarization options include military, center and military, and dual bar**
- **Choice of duplex gold plating on contact mating area**
- **Insulation displacement contacts for fast, economical mass terminations**
- **Contact design provides uniform latching of contacts and housing with connector cover**
- **Housing, cover and strain relief made of UL 94V-0 rated thermoplastic material**
- **Selected 10 thru 64-position configurations available**
- **Accepts wire size range 28-26 AWG [0.08-0.15 mm^2], solid or stranded**
- **Snap-on strain relief and choice of pull loops available**
- **One-step termination with Novo tooling**
- **Recognized under the Component Program of the Underwriters Laboratories, Inc. UL File No. E28476**
- **Certified by the Canadian Standards Association, File No. LR 7189**

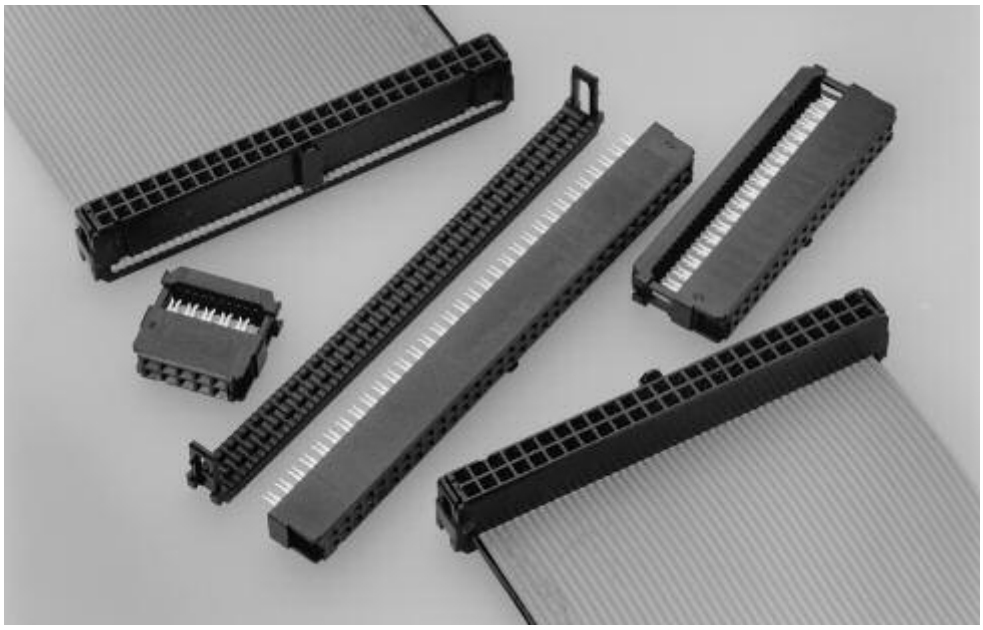

Novo receptacles offer a dual contact interface with all normal force created by metal-to-metal contact. This provides a higher degree of contact reliability.

Novo receptacles feature two rows of contacts on .100 x .100 [2.54 x 2.54] centerlines in select sizes from 10 to 64 positions. Contacts mate with .025[2] [0.64[2]] or round posts with .245 [6.22] max. and .175 [4.45] min. lengths. The Novo tuning fork contact offers a military-approved design, and at a lower cost.

Contacts are made of phosphor bronze and are available in a choice of duplex .000015 [0.00038] or .000030 [0.00076] gold in the mating area, and .000100 [0.00254] tin in the termination area, with the entire contact underplated with .000050 [0.00127] nickel.

Housings are made of UL 94V-0 thermoplastic material and feature military, military and center, and dual bar polarization.

Optional accessories include a snap-on strain relief and pull loops.

Novo receptacles can be terminated to .050 [1.27] pitch ribbon cable by a wide variety of one-step application tooling.

Assemblies are packaged in tubes for ease of handling, protection and termination.

Catalog 82012
Revised 4-12

www.te.com

Dimensions are shown for reference purposes only. Specifications subject to change.

Dimensions are in inches and millimeters unless otherwise specified.
USA: +1 (800) 522-6752

Canada: +1 (905) 475-6222
Mexico/C. Am.: +52 (0) 55-1106-0800
Latin/S. Am.: +54 (0) 11-4733-2200
Germany: +49 (0) 6251-133-1999

UK: +44 (0) 800-267666
France: +33 (0) 1-3420-8686
Netherlands: +31 (0) 73-6246-999
China: +86 (0) 400-820-6015

Novo Receptacles, Military Polarized* .100 x .100 [2.54 x 2.54] Centers

Housing Assembly with Cover (Preassembled) and Strain Relief (Optional)

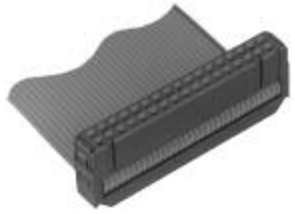

Contacts mate with .025 [0.64] sq. or round pins with .245 [6.22] max. and .175 [4.45] min. lengths.

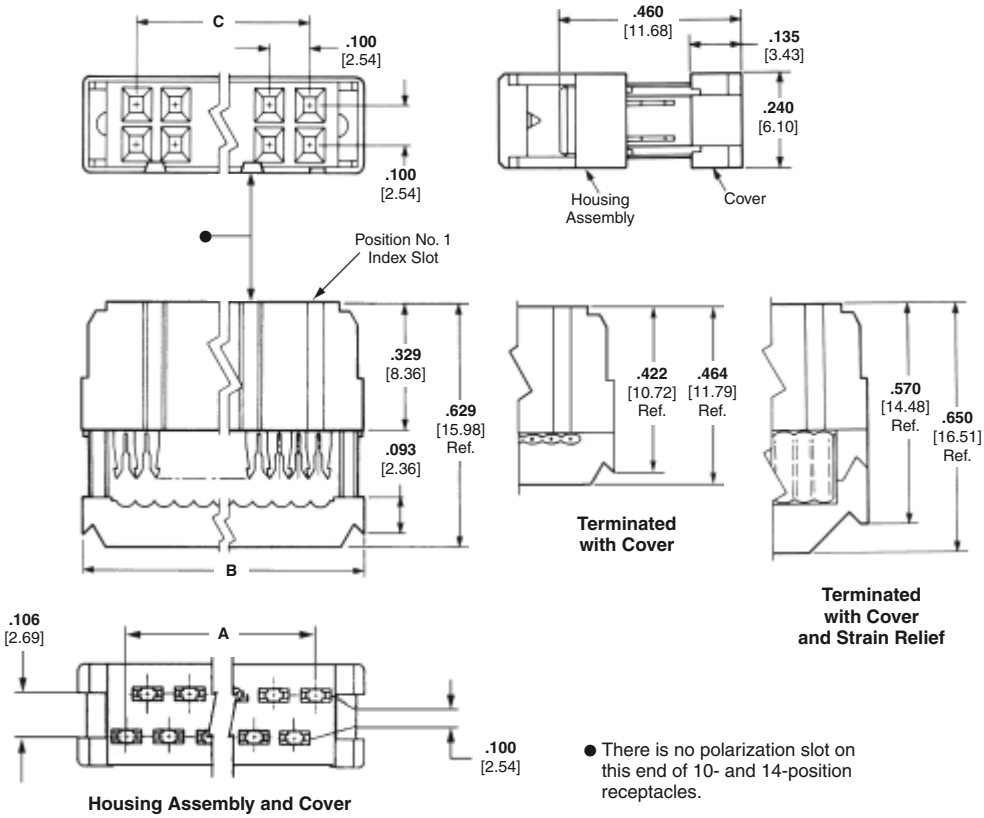

Housing Assembly and Cover

● There is no polarization slot on this end of 10- and 14-position receptacles.

Material and Finish

Housing, Cover & Strain Relief — UL 94V-0 rated thermoplastic, black

Contacts — Phosphor bronze, duplex plated (See chart below)

Related Product Data

Mateable Pin Headers — Universal — pages 84-95
Low Profile — pages 76-83
Mateable Universal I/O Pin Connectors — pages 45 and 46

Accessories

Pull Tabs — page 63
Keying Plug — page 64
Pull Loops — page 66
Strain Relief Dimensional Information — page 68
Application Tooling — pages 70-74

Technical Documents

Product Specifications
108-40000 Novo and Novo Stackable Receptacles; 108-40004 Ribbon Cable, PVC Insulated

Application Specification
114-40005 Ribbon Cable Connectors

Instruction Sheets
Instructional material covering operation, setup, maintenance, repair, etc. is included with each machine, tool or die set. If this material is required prior to receiving your tooling, call TE at the numbers listed below for the applicable documents.

No. of Pos.	Dimensions A	Dimensions B	Dimensions C	Contact Plating	Strain Relief Part No.	Receptacle (Preassembled)
10	**.450** 11.43	**.680** 17.27	**.400** 10.16	Duplex[1]	499252-5	1658620-1
				Duplex[2]	499252-5	1658623-1
14	**.650** 16.51	**.880** 22.35	**.600** 15.24	Duplex[1]	499252-9	1658620-2
				Duplex[2]	499252-9	1658623-2
16	**.750** 19.05	**.980** 24.89	**.700** 17.78	Duplex[1]	499252-8	1658620-3
				Duplex[2]	499252-8	1658623-3
20	**.950** 24.13	**1.180** 29.97	**.900** 22.86	Duplex[1]	499252-2	1658620-4
				Duplex[2]	499252-2	1658623-4
24	**1.150** 29.21	**1.380** 35.05	**1.100** 27.94	Duplex[1]	1-499252-0	1658620-5
				Duplex[2]	1-499252-0	1658623-5
26	**1.250** 31.75	**1.480** 37.59	**1.200** 30.48	Duplex[1]	499252-3	1658620-6
				Duplex[2]	499252-3	1658623-6
30	**1.450** 36.83	**1.680** 42.67	**1.400** 35.56	Duplex[1]	1-499252-2	1658620-7
				Duplex[2]	1-499252-2	1658623-7
34	**1.650** 41.91	**1.880** 47.75	**1.600** 40.64	Duplex[1]	499252-6	1658620-8
				Duplex[2]	499252-6	1658623-8
40	**1.950** 49.53	**2.180** 55.37	**1.900** 48.26	Duplex[1]	499252-1	1658620-9
				Duplex[2]	499252-1	1658623-9
50	**2.450** 62.23	**2.680** 68.07	**2.400** 60.96	Duplex[1]	499252-4	1-1658620-0
				Duplex[2]	499252-4	1-1658623-0
60	**2.950** 74.93	**3.180** 80.77	**2.900** 73.66	Duplex[1]	499252-7	—
				Duplex[2]	499252-7	—
64	**3.150** 80.01	**3.380** 85.85	**3.100** 78.74	Duplex[1]	1-499252-3	1-1658620-2
				Duplex[2]	1-499252-3	—

[1].000015 [0.00038] gold or gold flash over palladium-nickel .000015 [0.00038] min. total on post/pin mating end, .000100-.000200 [0.00254-0.00508] tin on termination end, with entire contact underplated .000050 [0.00127] nickel.
[2].000030 [0.00076] gold or gold flash over palladium-nickel .000030 [0.00076] min. total on post/pin mating end, .000100-.000200 [0.00254-0.00508] tin on termination end, with entire contact underplated .000050 [0.00127] nickel.

Note: These receptacles include a housing assembly and cover (preassembled). Strain reliefs may be purchased separately using the component part nos. listed above.
All part numbers are RoHS compliant.

*These receptacles can be used in applications requiring non-polarization, as well as military polarization.

Dimensions are shown for reference purposes only. Specifications subject to change.

Dimensions are in inches and millimeters unless otherwise specified.
USA: +1 (800) 522-6752

Canada: +1 (905) 475-6222
Mexico/C. Am.: +52 (0) 55-1106-0800
Latin/S. Am.: +54 (0) 11-4733-2200
Germany: +49 (0) 6251-133-1999

UK: +44 (0) 800-267666
France: +33 (0) 1-3420-8686
Netherlands: +31 (0) 73-6246-999
China: +86 (0) 400-820-6015

Novo Receptacles, Center and Military Polarized*
.100 x .100 [2.54 x 2.54] Centers

Housing Assembly with Cover (Preassembled) and Strain Relief (Optional)

Contacts mate with .025 [0.64] sq. or round pins with .245 [6.22] max. and .175 [4.45] min. lengths.

Material and Finish

Housing, Cover & Strain Relief — UL 94V-0 rated thermoplastic, black

Contacts — Phosphor bronze, duplex plated (See chart below)

Related Product Data

Mateable Pin Headers — Universal — pages 84-95
Low Profile — pages 76-83

Mateable Universal I/O Pin Connectors — pages 45 and 46

Accessories

Pull Tabs — page 63
Keying Plug — page 64
Pull Loops — page 66
Strain Relief — page 68
Application Tooling — pages 70-74

Technical Documents

Product Specifications
108-40000 Novo and Novo Stackable Receptacles; 108-40004 Ribbon Cable, PVC Insulated

Application Specification
114-40005 Novo Receptacles

Instruction Sheets
Instructional material covering operation, setup, maintenance, repair, etc. is included with each machine, tool or die set. If this material is required prior to receiving your tooling, call TE at the numbers listed below for the applicable documents.

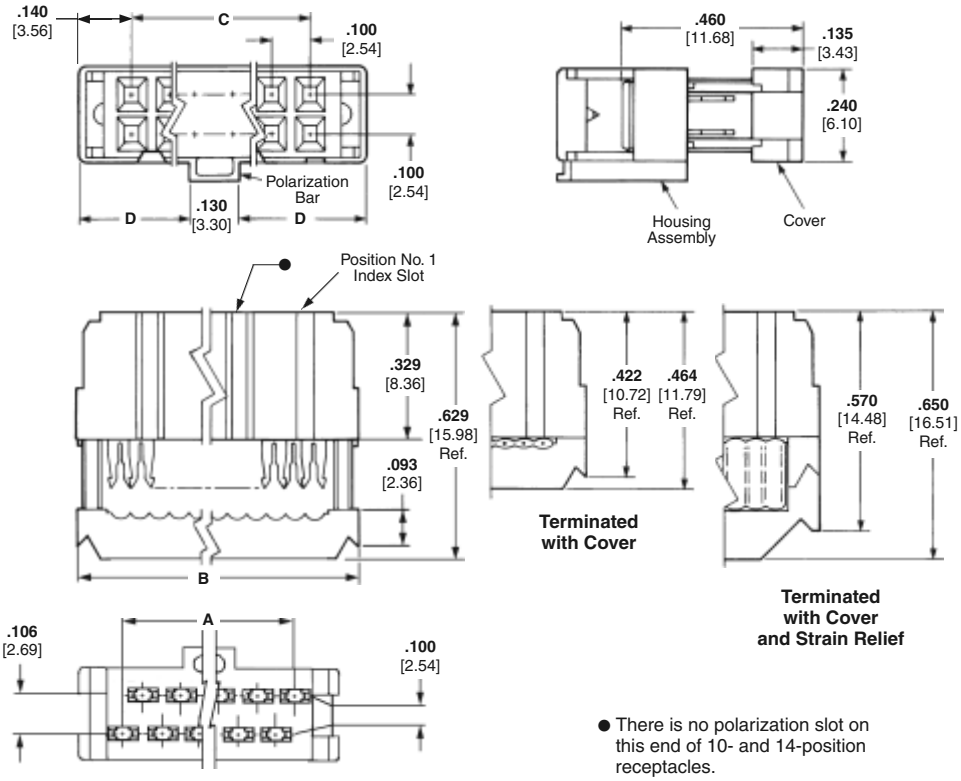

Housing Assembly and Cover

● There is no polarization slot on this end of 10- and 14-position receptacles.

No. of Pos.	Dimensions A	Dimensions B	Dimensions C	Dimensions D	Contact Plating	Strain Relief Part No.	Receptacle (Preassembled)
10	**.450** 11.43	**.680** 17.27	**.400** 10.16	**.275** 6.99	Duplex[1]	499252-5	1658621-1
					Duplex[2]	499252-5	1658622-1
14	**.650** 16.51	**.880** 22.35	**.600** 15.24	**.375** 9.53	Duplex[1]	499252-9	1658621-2
					Duplex[2]	499252-9	1658622-2
16	**.750** 19.05	**.980** 24.89	**.700** 17.78	**.425** 10.80	Duplex[1]	499252-8	1658621-3
					Duplex[2]	499252-8	1658622-3
20	**.950** 24.13	**1.180** 29.97	**.900** 22.86	**.525** 13.34	Duplex[1]	499252-2	1658621-4
					Duplex[2]	499252-2	1658622-4
24	**1.150** 29.21	**1.380** 35.05	**1.100** 27.94	**.625** 15.88	Duplex[1]	1-499252-0	1658621-5
					Duplex[2]	1-499252-0	1658622-5
26	**1.250** 31.75	**1.480** 37.59	**1.200** 30.48	**.675** 17.15	Duplex[1]	499252-3	1658621-6
					Duplex[2]	499252-3	1658622-6
30	**1.450** 36.83	**1.680** 42.67	**1.400** 35.56	**.775** 19.69	Duplex[1]	1-499252-2	1658621-7
					Duplex[2]	1-499252-2	1658622-7
34	**1.650** 41.91	**1.880** 47.75	**1.600** 40.64	**.875** 22.23	Duplex[1]	499252-6	1658621-8
					Duplex[2]	499252-6	1658622-8
40	**1.950** 49.53	**2.180** 55.37	**1.900** 48.26	**1.025** 26.04	Duplex[1]	499252-1	1658621-9
					Duplex[2]	499252-1	1658622-9
50	**2.450** 62.23	**2.680** 68.07	**2.400** 60.96	**1.275** 32.39	Duplex[1]	499252-4	1-1658621-0
					Duplex[2]	499252-4	1-1658622-0
60	**2.950** 74.93	**3.180** 80.77	**2.900** 73.66	**1.525** 38.74	Duplex[1]	499252-7	1-1658621-1
					Duplex[2]	499252-7	1-1658622-1
64	**3.150** 80.01	**3.380** 85.85	**3.100** 78.74	**1.625** 41.28	Duplex[1]	1-499252-3	1-1658621-2
					Duplex[2]	1-499252-3	1-1658622-2

[1].000015 [0.00038] gold or gold flash over palladium-nickel .000015 [0.00038] min. total on post/pin mating end, .000100-.000200 [0.00254-0.00508] tin on termination end, with entire contact underplated .000050 [0.00127] nickel.
[2].000030 [0.00076] gold or gold flash over palladium-nickel .000030 [0.00076] min. total on post/pin mating end, .000100-.000200 [0.00254-0.00508] tin on termination end, with entire contact underplated .000050 [0.00127] nickel.

Note: These receptacles include a housing assembly and cover (preassembled). Strain reliefs may be purchased separately using the component part nos. listed above.
All part numbers are RoHS compliant.

*These receptacles can be used in applications requiring center polarization.

Dimensions are shown for reference purposes only. Specifications subject to change.

Dimensions are in inches and millimeters unless otherwise specified.
USA: +1 (800) 522-6752

Canada: +1 (905) 475-6222
Mexico/C. Am.: +52 (0) 55-1106-0800
Latin/S. Am.: +54 (0) 11-4733-2200
Germany: +49 (0) 6251-133-1999

UK: +44 (0) 800-267666
France: +33 (0) 1-3420-8686
Netherlands: +31 (0) 73-6246-999
China: +86 (0) 400-820-6015

Novo Receptacles, Dual Polarized, .100 x .100 [2.54 x 2.54] Centers

Housing Assembly with Recessed Cover (Preassembled) and Strain Relief (Optional)

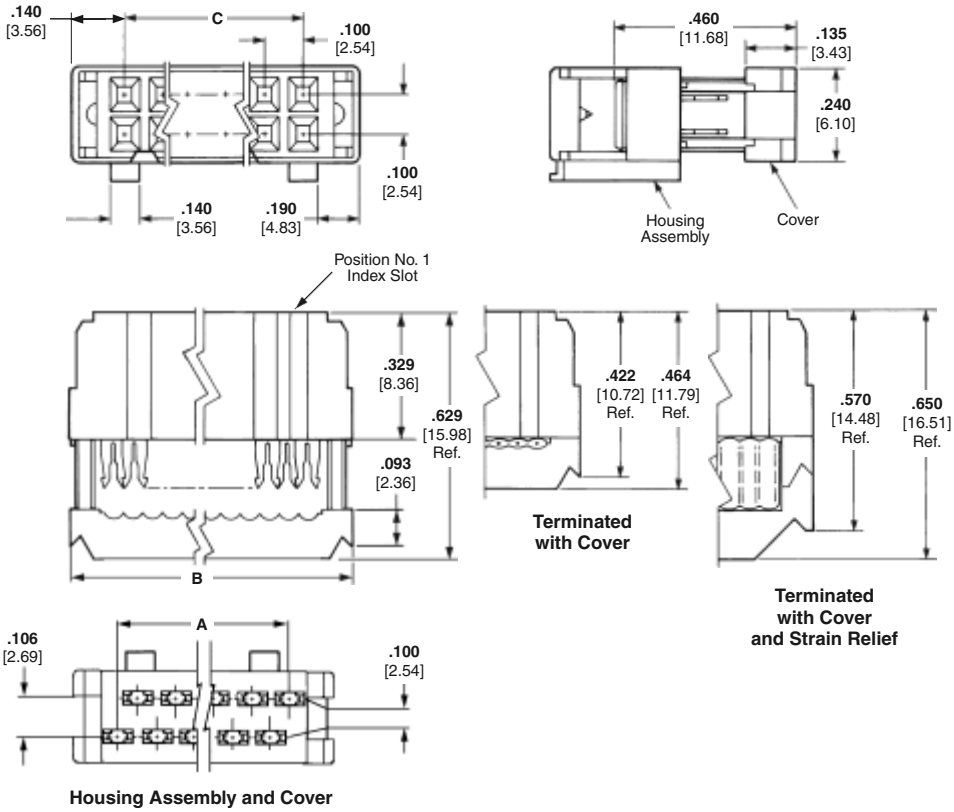

Housing Assembly and Cover

Material and Finish

Housing, Cover & Strain Relief — UL 94V-0 rated thermoplastic, black

Contacts — Phosphor bronze, duplex plated .000030 [0.00076] gold or gold flash over palladium-nickel .000030 [0.00076] min. total on post/pin mating end, .000100-.000200 [0.00254-0.00508] tin on termination end, with entire contact underplated .000050 [0.00127] nickel.

Related Product Data

Mateable Pin Headers —
Universal — pages 84-95
Low Profile — pages 76-83

Mateable Universal I/O Pin Connectors — pages 45 and 46

Accessories

Pull Tabs — page 63
Keying Plug — page 64
Pull Loops — page 66
Strain Relief — page 68
Application Tooling — pages 70-74

Technical Documents

Product Specifications
108-40000 Novo and Novo Stackable Receptacles; 108-40004 Ribbon Cable, PVC Insulated

Application Specification
114-40005 Novo Receptacles

Instruction Sheets
Instructional material covering operation, setup, maintenance, repair, etc. is included with each machine, tool or die set. If this material is required prior to receiving your tooling, call TE at the numbers listed below for the applicable documents.

No. of Pos.	Dimensions			Strain Relief Part No.	Receptacle (Preassembled)
	A	B	C		
10	**.450** 11.43	**.680** 17.27	**.400** 10.16	499252-5	1658624-1
14	**.650** 16.51	**.880** 22.35	**.600** 15.24	499252-9	1658624-2
16	**.750** 19.05	**.980** 24.89	**.700** 17.78	499252-8	1658624-3
20	**.950** 24.13	**1.180** 29.97	**.900** 22.86	499252-2	1658624-4
24	**1.150** 29.21	**1.380** 35.05	**1.100** 27.94	1-499252-0	1658624-5
26	**1.250** 31.75	**1.480** 37.59	**1.200** 30.48	499252-3	1658624-6
30	**1.450** 36.83	**1.680** 42.67	**1.400** 35.56	1-499252-2	1658624-7
34	**1.650** 41.91	**1.880** 47.75	**1.600** 40.64	499252-6	1658624-8
40	**1.950** 49.53	**2.180** 55.37	**1.900** 48.26	499252-1	1658624-9
50	**2.450** 62.23	**2.680** 68.07	**2.400** 60.96	499252-4	1-1658624-0
64	**3.150** 80.01	**3.380** 85.85	**3.100** 78.74	1-499252-3	1-1658624-2

Note: All part numbers are RoHS compliant.

Dimensions are shown for reference purposes only. Specifications subject to change.

Dimensions are in inches and millimeters unless otherwise specified.
USA: +1 (800) 522-6752

Canada: +1 (905) 475-6222
Mexico/C. Am.: +52 (0) 55-1106-0800
Latin/S. Am.: +54 (0) 11-4733-2200
Germany: +49 (0) 6251-133-1999
UK: +44 (0) 800-267666
France: +33 (0) 1-3420-8686
Netherlands: +31 (0) 73-6246-999
China: +86 (0) 400-820-6015

Female Socket Connectors, .100 x .100 [2.54 x 2.54] Centers, 622 and 636 Series

Technical Data

Color — 622 Series, Blue; 636 Series, Black

Contact Material — 622 Series, Beryllium copper; 636 Series, Phosphor bronze

Contact Plating — 622 Series, .000030 [0.00076] min. gold on mating end, .000100-.000200 [0.00254-0.00508] tin on termination end, both over .000050 [0.00127] nickel underplate; 636 Series, .000015 [0.00038] min. gold on mating end, .000100-.000200 [0.00254-0.00508] tin on termination end, both over .000050 [0.00127] nickel underplate.

Housing Material — Glass-filled thermoplastic, UL 94V-0 rated

Cable — 26-28 AWG solid or stranded, PVC insulated ribbon cable

Mateable Connectors — **Universal and Low Profile Pin Headers** — pages 76-95

Universal I/O Ribbon Cable Connectors — pages 45 and 46

Polarization — Military and center polarized only

- **Recognized under the Component Program of the Underwriters Laboratories, Inc. UL File No. E60980**
- **Certified by the Canadian Standards Association, File No. LR 92984**

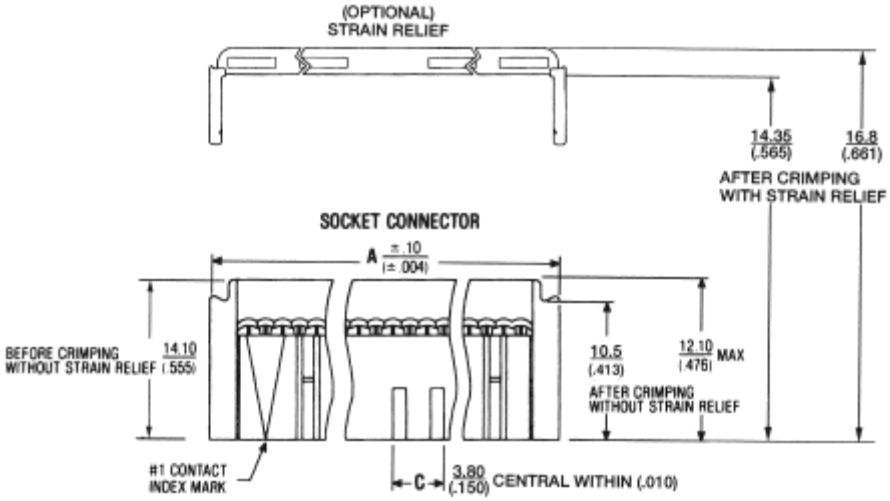

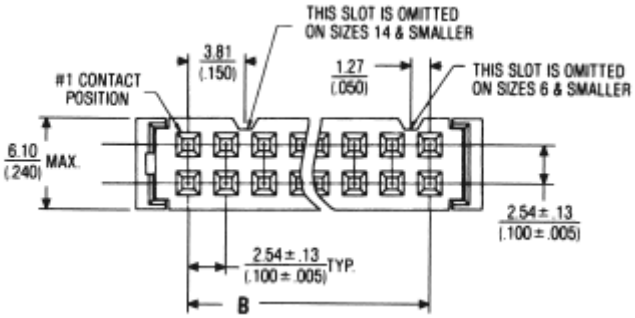

Application Tooling

Die — 1437000-9 [T&B# 779-2151 ref.]

Handtool — 1437000-6 [T&B# 779-2100 ref.]

Bench Press (Manual) — 1437001-4 [T&B# 779-3200 ref.]

Bench Press Platen — 5-1437000-6 [T&B# 779-3130 ref.]

Bench Press Base Plate — 6-1437000-4 [T&B# 779-3151 ref.]

Accessories

Strain Relief — page 69

Pull Loops — page 66

Keying Plug — page 64

Female Socket Connectors, .100 x .100 [2.54 x 2.54] Centers, 622 and 636 Series (Continued)

622 Series

No.of Pos.	Dimensions A	Dimensions B	Dimensions C	Part Numbers: Connector Only, TE Connectivity	Part Numbers: Connector Only, T&B (Reference Only)	Part Numbers: Connector w/ Strain Relief, TE Connectivity	Part Numbers: Connector w/ Strain Relief, T&B (Reference Only)
6	**.477** 12.12	**.200** 5.08	**.075** 1.91	1658527-2	622-0630LF	1-1658527-9	622-0641LF
10	**.677** 17.20	**.400** 10.16	**.126** 3.20	1658527-3	622-1030LF	1658527-4	622-1041LF
12	**.777** 19.74	**.500** 12.70	**.150** 3.81	2-1658527-0	622-1230LF	—	—
14	**.877** 22.28	**.600** 15.24	**.150** 3.81	1658527-5	622-1430LF	2-1658527-2	622-1441LF
16	**.977** 24.82	**.700** 17.78	**.150** 3.81	1658527-6	622-1630LF	1658527-7	622-1641LF
20	**1.177** 29.90	**.900** 22.86	**.150** 3.81	2-1658527-3	622-2030LF	1658527-8	622-2041LF
24	**1.377** 34.98	**1.100** 27.94	**.150** 3.81	—	—	2-1658527-5	622-2441LF
26	**1.477** 37.52	**1.200** 30.48	**.150** 3.81	1658527-9	622-2630LF	1-1658527-0	622-2641LF
30	**1.677** 42.60	**1.400** 35.56	**.150** 3.81	—	—	2-1658527-7	622-3041LF
34	**1.877** 47.68	**1.600** 40.64	**.150** 3.81	—	—	2-1658527-8	622-3441LF
40	**2.177** 55.30	**1.900** 48.26	**.150** 3.81	1-1658527-2	622-4030LF	1-1658527-3	622-4041LF
50	**2.677** 68.00	**2.400** 60.96	**.150** 3.81	1-1658527-4	622-5030LF	1-1658527-5	622-5041LF
64	**3.377** 85.78	**3.100** 78.74	**.150** 3.81	—	—	3-1658527-2	622-6441LF

Note: Order by TE Part Number only. Original non-RoHS compliant T&B number may be determined by dropping the "LF" suffix.

636 Series

No.of Pos.	Dimensions A	Dimensions B	Dimensions C	Part Numbers: Connector Only, TE Connectivity	Part Numbers: Connector Only, T&B (Reference Only)	Part Numbers: Connector w/ Strain Relief, TE Connectivity	Part Numbers: Connector w/ Strain Relief, T&B (Reference Only)
6	**.477** 12.12	**.200** 5.08	**.075** 1.91	1-1658528-0	636-0630LF	—	—
10	**.677** 17.20	**.400** 10.16	**.126** 3.20	1-1658528-1	636-1030LF	1658528-2	636-1041LF
14	**.877** 22.28	**.600** 15.24	**.150** 3.81	1-1658528-2	636-1430LF	—	—
16	**.977** 24.82	**.700** 17.78	**.150** 3.81	1-1658528-4	636-1630LF	1658528-5	636-1641LF
20	**1.177** 29.90	**.900** 22.86	**.150** 3.81	1-1658528-5	636-2030LF	1658528-4	636-2041LF
24	**1.377** 34.98	**1.100** 27.94	**.150** 3.81	1-1658528-6	636-2430LF	—	—
26	**1.477** 37.52	**1.200** 30.48	**.150** 3.81	1-1658528-7	636-2630LF	—	—
34	**1.877** 47.68	**1.600** 40.64	**.150** 3.81	—	—	1658528-6	636-3441LF
40	**2.177** 55.30	**1.900** 48.26	**.150** 3.81	—	—	1-1658528-9	636-4041LF
50	**2.677** 68.00	**2.400** 60.96	**.150** 3.81	2-1658528-0	636-5030LF	1658528-8	636-5041LF
64	**3.377** 85.78	**3.100** 78.74	**.150** 3.81	—	—	2-1658528-3	636-6441LF

Note: All part numbers are RoHS compliant.

Note: Order by TE Part Number only. Original non-RoHS compliant T&B number may be determined by dropping the "LF" suffix.

Dimensions are shown for reference purposes only. Specifications subject to change.

Dimensions are in inches and millimeters unless otherwise specified.
USA: +1 (800) 522-6752

Canada: +1 (905) 475-6222
Mexico/C. Am.: +52 (0) 55-1106-0800
Latin/S. Am.: +54 (0) 11-4733-2200
Germany: +49 (0) 6251-133-1999

UK: +44 (0) 800-267666
France: +33 (0) 1-3420-8686
Netherlands: +31 (0) 73-6246-999
China: +86 (0) 400-820-6015

Female Socket Connectors, .100 x .100 [2.54 x 2.54] Centers, 609 Series

Technical Data

Color — Blue

Contact Material — Beryllium copper

Contact Plating — .000030 [0.00076] min. gold on mating end, .000100-.000200 [0.00254-0.00508] tin on termination end, both over .000050 [0.00127] nickel underplate.

Housing Material — Glass-filled thermoplastic, UL 94V-0 rated

Cable — 28-30 AWG solid or stranded, PVC insulated ribbon cable

Mateable Connectors — **Universal and Low Profile Pin Headers** — pages 76-95
Universal I/O Ribbon Cable Connectors — pages 45 and 46

Polarization — Military only or military and center polarized

- **Recognized under the Component Program of the Underwriters Laboratories, Inc. UL File No. E60980**
- **Certified by the Canadian Standards Association, File No. LR 92984**

Application Tooling

Die — 1437000-9 [T&B# 779-2151 ref.]

Handtool — 1437000-6 [T&B# 779-2100 ref.]

Bench Press (Manual) — 1437001-4 [T&B# 779-3200 ref.]

Bench Press Platen — 5-1437000-6 [T&B# 779-3130 ref.]

Bench Press Base Plate — 6-1437000-4 [T&B# 779-3151 ref.]

Accessories

Strain Relief — page 67

Pull Loops — page 66

Keying Plug — page 64

Dual Slot IDC Design

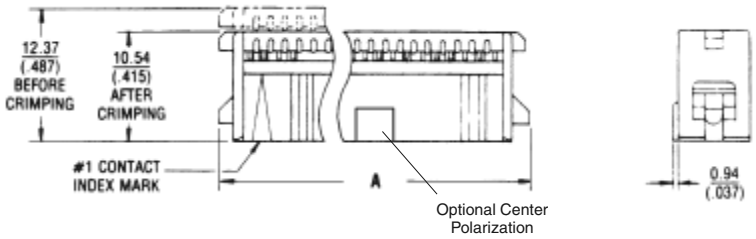

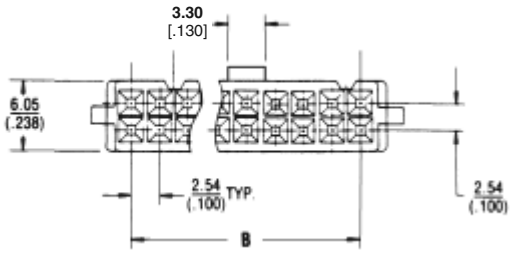

Standard Socket Connector Without Strain Relief

Note: All part numbers are RoHS compliant.

Female Socket Connectors, .100 x .100 [2.54 x 2.54] Centers, 609 Series (Continued)

609 Series, Military Polarized

No.of Pos.	Dimensions A	Dimensions B	Dimensions C	Part Numbers: Connector Only, TE Connectivity	Part Numbers: Connector Only, T&B (Reference Only)	Part Numbers: Connector w/ Strain Relief, TE Connectivity	Part Numbers: Connector w/ Strain Relief, T&B (Reference Only)
6	**.476** 12.09	**.200** 5.08	**.392** 9.96	2-1658526-5	609-0600MLF	—	—
10	**.676** 17.17	**.400** 10.16	**.592** 15.04	1658526-3	609-1000MLF	—	—
16	**.976** 24.79	**.700** 17.78	**.892** 22.66	—	—	1-1658526-0	609-1601MLF
20	**1.176** 29.87	**.900** 22.86	**1.092** 27.74	3-1658526-0	609-2000MLF	—	—
26	**1.476** 37.49	**1.200** 30.48	**1.392** 35.36	3-1658526-5	609-2600MLF	—	—
40	**2.176** 55.27	**1.900** 48.26	**2.092** 53.14	4-1658526-1	609-4000MLF	—	—
50	**2.676** 67.97	**2.400** 60.96	**2.592** 65.84	4-1658526-3	609-5000MLF	2-1658526-2	609-5001MLF

Note: Order by TE Part Number only. Original non-RoHS compliant T&B number may be determined by dropping the "LF" suffix.

609 Series, Military and Center Polarized

No.of Pos.	Dimensions A	Dimensions B	Dimensions C	Part Numbers: Connector Only, TE Connectivity	Part Numbers: Connector Only, T&B (Reference Only)	Part Numbers: Connector w/ Strain Relief, TE Connectivity	Part Numbers: Connector w/ Strain Relief, T&B (Reference Only)
6	**.476** 12.09	**.200** 5.08	**.392** 9.96	1658526-1	609-0630LF	1658526-2	609-0641LF
10	**.676** 17.17	**.400** 10.16	**.592** 15.04	1658526-4	609-1030LF	1658526-5	609-1041LF
14	**.876** 22.25	**.600** 15.24	**.792** 20.12	1658526-8	609-1430LF	1658526-9	609-1441LF
16	**.976** 24.79	**.700** 17.78	**.892** 22.66	2-1658526-9	609-1630LF	1-1658526-1	609-1641LF
20	**1.176** 29.87	**.900** 22.86	**1.092** 27.74	1-1658526-2	609-2030LF	1-1658526-3	609-2041LF
24	**1.376** 34.95	**1.100** 27.94	**1.292** 32.82	1-1658526-4	609-2430LF	—	—
26	**1.476** 37.49	**1.200** 30.48	**1.392** 35.36	1-1658526-5	609-2630LF	1-1658526-6	609-2641LF
34	**1.876** 47.65	**1.600** 40.64	**1.792** 45.52	1-1658526-8	609-3430LF	1-1658526-9	609-3441LF
36	**1.976** 50.19	**1.700** 43.18	**1.892** 48.06	3-1658526-8	609-3630LF	4-1658526-0	609-3641LF
40	**2.176** 55.27	**1.900** 48.26	**2.092** 53.14	2-1658526-0	609-4030LF	2-1658526-1	609-4041LF
50	**2.676** 67.97	**2.400** 60.96	**2.592** 65.84	2-1658526-3	609-5030LF	2-1658526-4	609-5041LF
64	**3.376** 85.75	**3.100** 78.74	**3.292** 83.62	4-1658526-4	609-6430LF	4-1658526-5	609-6441LF

Note: Order by TE Part Number only. Original non-RoHS compliant T&B number may be determined by dropping the "LF" suffix.

Note: All part numbers are RoHS compliant.

Dimensions are shown for reference purposes only. Specifications subject to change.

Dimensions are in inches and millimeters unless otherwise specified.
USA: +1 (800) 522-6752

Canada: +1 (905) 475-6222
Mexico/C. Am.: +52 (0) 55-1106-0800
Latin/S. Am.: +54 (0) 11-4733-2200
Germany: +49 (0) 6251-133-1999

UK: +44 (0) 800-267666
France: +33 (0) 1-3420-8686
Netherlands: +31 (0) 73-6246-999
China: +86 (0) 400-820-6015

DIP Plugs, .100 x .100 [2.54 x 2.54] Centers, 609 Series

Technical Data

Color — Blue

Contact Material — Beryllium copper

Contact Plating — .000100-.000200 [0.00254-0.00508] tin over .000050 [0.00127] nickel underplate.

Contact Design — Dual slot, barrel shaped ("tulip") IDC with solder tail

Housing Material — Glass-filled thermoplastic, UL 94V-0 rated

Cable — 28-30 AWG solid or stranded, PVC insulated ribbon cable

Mateable Connectors — .100 x .100 DIP sockets

Application Tooling

Die — 1-1437000-3 [T&B# 779-2153 ref.]

Handtool — 1437000-6 [T&B# 779-2100 ref.]

Bench Press (Manual) — 1437001-4 [T&B# 779-3200 ref.]

Bench Press Platen — 5-1437000-6 [T&B# 779-3130 ref.]

Bench Press Base Plate — 6-1437000-7 [T&B# 779-3153 ref.]

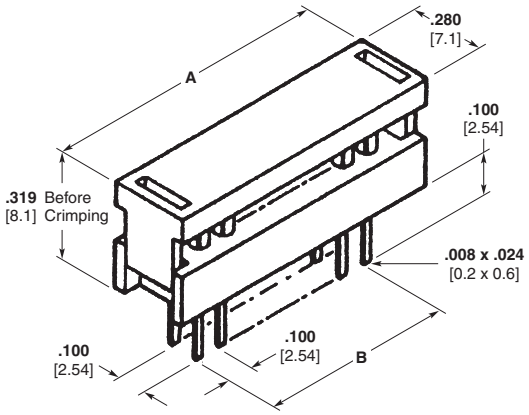

No.of Pos.	Dimensions		Part Numbers	
	A	B	TE Connectivity	T&B (Reference Only)
6	**.512** 13.00	**.200** 5.08	1437006-4	609-0653
10	**.713** 18.11	**.400** 10.16	1437006-7	609-1053
14	**.913** 23.19	**.600** 15.24	1-1437006-0	609-1453
16	**1.010** 25.65	**.700** 17.78	1-1437006-3	609-1653
20	**1.213** 30.81	**.900** 22.86	1-1437006-6	609-2053
26	**1.512** 38.40	**1.200** 30.48	2-1437006-1	609-2653
34	**1.913** 48.59	**1.600** 40.64	2-1437006-4	609-3453

Note: Order by TE Part Number only. All part numbers listed above are found on TE customer drawing 1437006-4.

Note: All part numbers are RoHS compliant.

Catalog 82012
Revised 4-12

www.te.com

Dimensions are shown for reference purposes only. Specifications subject to change.

Dimensions are in inches and millimeters unless otherwise specified.
USA: +1 (800) 522-6752

Canada: +1 (905) 475-6222
Mexico/C. Am.: +52 (0) 55-1106-0800
Latin/S. Am.: +54 (0) 11-4733-2200
Germany: +49 (0) 6251-133-1999

UK: +44 (0) 800-267666
France: +33 (0) 1-3420-8686
Netherlands: +31 (0) 73-6246-999
China: +86 (0) 400-820-6015

DIP Plugs, .100 x .100 [2.54 x 2.54] Centers, 622 Series

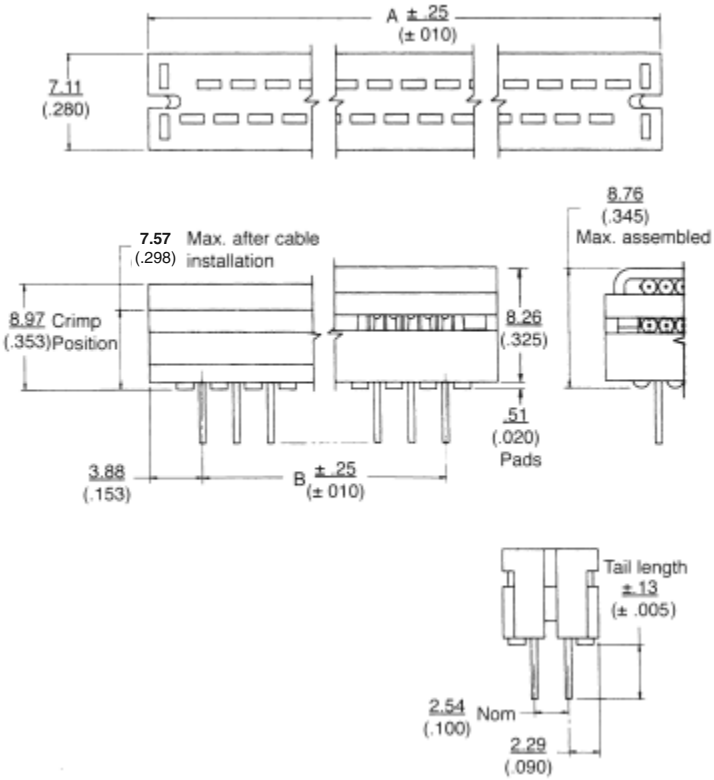

Technical Data

Color — Blue

Contact Material — Beryllium copper

Contact Plating — .000100-.000200 [0.00254-0.00508] tin over .000050 [0.00127] nickel underplate.

Contact Design — Single slot, flat, tuning fork style IDC with solder tail

Housing Material — Glass-filled thermoplastic, UL 94V-0 rated

Cable — 26-28 AWG solid or stranded, PVC insulated ribbon cable

Mateable Connectors — .100 x .100 DIP sockets

Application Tooling

Die —
1-1437000-3 [T&B# 779-2153 ref.]

Handtool —
1437000-6 [T&B# 779-2100 ref.]

Bench Press (Manual) —
1437001-4 [T&B# 779-3200 ref.]

Bench Press Platen —
6-1437000-1 [T&B# 779-3133 ref.]

Bench Press Base Plate —
6-1437000-7 [T&B# 779-3153 ref.]

Accessories

Strain Relief — page 65

No.of Pos.	Dimensions		Part Numbers	
	A	B	TE Connectivity	T&B (Reference Only)
6	**.506** 12.85	**.200** 5.08	1658525-4	622-0653LF
8	**.606** 15.39	**.300** 7.62	1658525-5	622-0853LF
10	**.706** 17.93	**.400** 10.16	1658525-6	622-1053LF
14	**.906** 23.01	**.600** 15.24	1658525-7	622-1453LF
16	**1.006** 25.55	**.700** 17.78	1658525-8	622-1653LF
20	**1.206** 30.63	**.900** 22.86	1658525-9	622-2053LF
24	**1.406** 35.71	**1.100** 27.94	1-1658525-0	622-2453LF
26	**1.506** 38.25	**1.200** 30.48	1658525-1	622-2653LF
34	**1.906** 48.41	**1.600** 40.64	1658525-2	622-3453LF
36	**2.006** 50.95	**1.700** 43.18	1-1658525-2	622-3653LF
40	**2.206** 56.03	**1.900** 48.26	1-1658525-3	622-4053LF
50	**2.706** 68.73	**2.400** 60.96	1658525-3	622-5053LF
60	**3.206** 81.43	**2.900** 73.66	1-1658525-5	622-6053LF
64	**3.406** 86.51	**3.100** 78.74	1-1658525-6	622-6453LF

Notes: Order by TE Part Number only.
All part numbers are RoHS compliant.

Dimensions are shown for reference purposes only. Specifications subject to change.

Dimensions are in inches and millimeters unless otherwise specified.
USA: +1 (800) 522-6752

Canada: +1 (905) 475-6222
Mexico/C. Am.: +52 (0) 55-1106-0800
Latin/S. Am.: +54 (0) 11-4733-2200
Germany: +49 (0) 6251-133-1999

UK: +44 (0) 800-267666
France: +33 (0) 1-3420-8686
Netherlands: +31 (0) 73-6246-999
China: +86 (0) 400-820-6015

DIP Plugs, .100 x .100 [2.54 x 2.54] Centers

Housing Assembly with Cover (Preassembled)

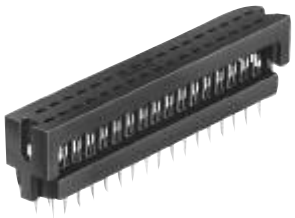

Material and Finish

Housing and Cover — Black thermoplastic, UL 94V-0 rated

Contacts — Phosphor bronze, plated .000005 [0.000127] min. gold in termination area, .000100 [0.00254] min. tin on solder tails, both over .000050 [0.00127] nickel on entire contact

Contact Design — Flat, tuning fork style IDC

Related Product Data

Application Tooling — pages 70-74

Technical Documents

Product Specification
108-1538 DIP Plug

Instruction Sheets
Instructional material covering operation, setup, maintenance, repair, etc. is included with each machine, tool or die set. If this material is required prior to receiving your tooling, call TE at the numbers listed below for the applicable documents.

Mateable Connectors — For Connectors without Retention Legs — .100 x .100 DIP Sockets

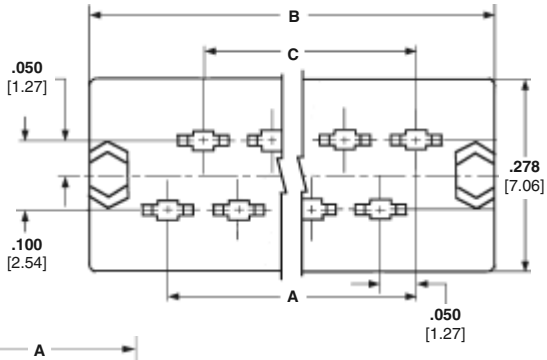

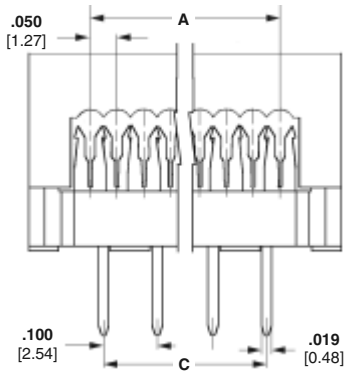

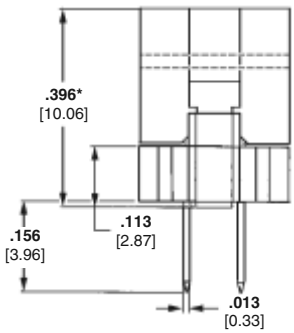

*Height of connector after termination is .253 [6.43] ref.

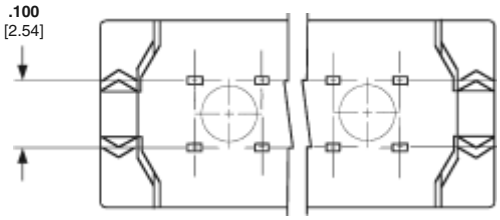

No. of Pos.	Dimensions A	Dimensions B	Dimensions C	DIP Plugs (Preassembled)	With Retention Legs
10	**.450** 11.43	**.680** 17.27	**.400** 10.16	2-746610-1	1-111382-4
14	**.650** 16.51	**.880** 22.35	**.600** 15.24	2-746610-2	—
16	**.750** 19.05	**.980** 24.89	**.700** 17.78	1-746610-4	1-111382-6
20	**.950** 24.13	**1.180** 29.97	**.900** 22.86	1-746610-5	1-111382-7
24	**1.150** 29.21	**1.380** 35.05	**1.100** 27.94	2-746610-3	—
26	**1.250** 31.75	**1.480** 37.59	**1.200** 30.48	1-746610-6	1-111382-8
30	**1.450** 36.83	**1.680** 42.67	**1.400** 35.56	1-746610-7	—
34	**1.650** 41.91	**1.880** 47.75	**1.600** 40.64	1-746610-8	1-111382-9
40	**1.950** 49.53	**2.180** 55.37	**1.900** 48.26	1-746610-9	—
44	**2.150** 54.61	**2.380** 60.45	**2.100** 53.34	2-746610-6	—
50	**2.450** 62.23	**2.680** 68.07	**2.400** 60.96	2-746610-0	2-111382-0
60	**2.950** 74.93	**3.180** 80.77	**2.900** 73.66	2-746610-4	—
64	**3.150** 80.01	**3.380** 85.85	**3.100** 78.74	2-746610-5	—

Notes: All plug kits include a housing assembly and cover (preassembled).
All part numbers are RoHS compliant.

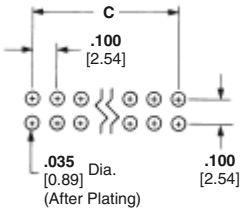

PCB Layout

Catalog 82012
Revised 4-12

www.te.com

Dimensions are shown for reference purposes only. Specifications subject to change.

Dimensions are in inches and millimeters unless otherwise specified.
USA: +1 (800) 522-6752

Canada: +1 (905) 475-6222
Mexico/C. Am.: +52 (0) 55-1106-0800
Latin/S. Am.: +54 (0) 11-4733-2200
Germany: +49 (0) 6251-133-1999

UK: +44 (0) 800-267666
France: +33 (0) 1-3420-8686
Netherlands: +31 (0) 73-6246-999
China: +86 (0) 400-820-6015

DIP Plugs, .100 x .300 [2.54 x 7.62] Centers

Housing Assembly with Cover (Preassembled)

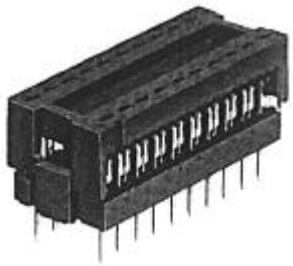

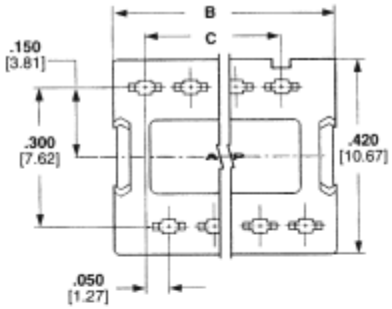

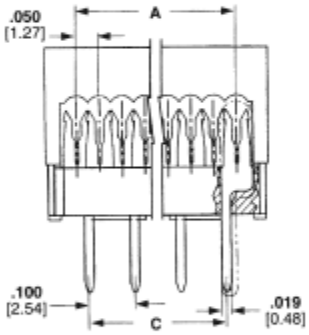

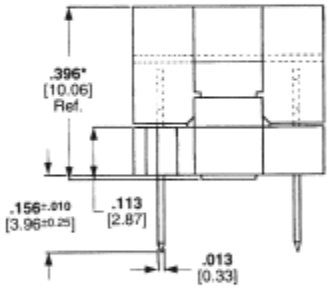

*Height of connector after termination is .253 [6.43] ref.

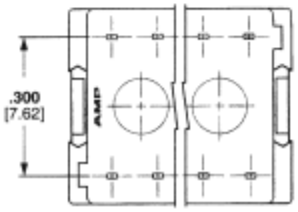

Material and Finish

Housing and Cover — Black thermoplastic, UL 94V-0 rated

Contacts — Phosphor bronze, plated .000050 [0.00127] nickel underplate on entire contact, .000005 [0.000127] min. gold on termination (IDC) end. See table for leg finish.

Contact Design — Flat, tuning fork style IDC

Related Product Data

Application Tooling — pages 70-74

Technical Documents

Product Specification
108-1538 DIP Plug

Ribbon Cable Requirements — 28 AWG stranded or 26, 28 and 30 AWG solid wire

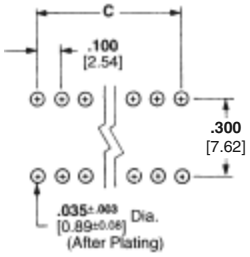

Recommended Mounting Hole Pattern
(for .094-.125 [2.39-3.18] thick pc boards)

No. of Pos.	Dimensions A	Dimensions B	Dimensions C	Contact Plating	DIP Plugs (Preassembled)
8	.350 8.89	.488 12.40	.300 7.62	Duplex[1]	746611-7
				Duplex[2]	—
				Duplex[3]	5746613-1
14	.650 16.51	.788 20.02	.600 15.24	Duplex[1]	746611-8
				Duplex[2]	5746612-2
				Duplex[3]	5746613-2
16	.750 19.05	.888 22.56	.700 17.78	Duplex[1]	746611-6
				Duplex[2]	5746612-3
				Duplex[3]	5746613-3
18	.850 21.59	.988 25.10	.800 20.32	Duplex[1]	746611-9
				Duplex[2]	—
				Duplex[3]	—
20	.950 24.13	1.088 27.64	.900 22.86	Duplex[1]	1-746611-0
				Duplex[2]	—
				Duplex[3]	—

[1] .000030 [0.00076] gold on leg
[2] .000015 [0.00038] gold on leg
[3] .000100 [0.00254] tin on leg
Note: All part numbers are RoHS compliant.

Catalog 82012
Revised 4-12

www.te.com

Dimensions are shown for reference purposes only. Specifications subject to change.

Dimensions are in inches and millimeters unless otherwise specified.
USA: +1 (800) 522-6752

Canada: +1 (905) 475-6222
Mexico/C. Am.: +52 (0) 55-1106-0800
Latin/S. Am.: +54 (0) 11-4733-2200
Germany: +49 (0) 6251-133-1999
UK: +44 (0) 800-267666
France: +33 (0) 1-3420-8686
Netherlands: +31 (0) 73-6246-999
China: +86 (0) 400-820-6015

DIP Plugs, .100 x .600 [2.54 x 15.24] Centers

Housing Assembly with Cover (Preassembled)

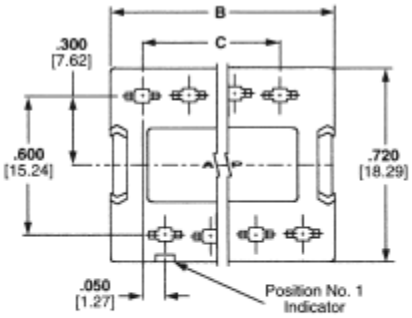

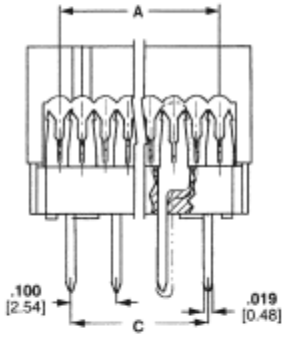

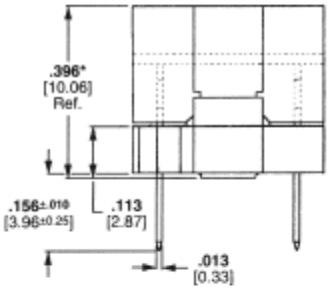

*Height of connector after termination is .253 [6.43] ref.

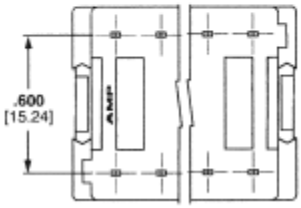

Material and Finish

Housing and Cover — Black thermoplastic, UL 94V-0 rated

Contacts — Phosphor bronze, plated .000050 [0.00127] nickel underplate on entire contact, .000005 [0.000127] min. gold on termination (IDC) end. See table for leg finish.

Contact Design — Flat, tuning fork style IDC

Related Product Data

Application Tooling — pages 70-74

Technical Documents

Product Specification
108-1538 DIP Plug

Ribbon Cable Requirements — 28 AWG stranded or 26, 28 and 30 AWG solid wire

No. of Pos.	Dimensions			Contact Plating	DIP Plugs (Preassembled)
	A	B	C		
24	**1.150** 29.21	**1.288** 32.72	**1.100** 27.94	Duplex[1]	5746615-1
28	**1.350** 34.29	**1.488** 37.80	**1.300** 33.02	Duplex[1]	5746615-2
40	**1.950** 49.53	**2.088** 53.04	**1.900** 48.26	Duplex[1]	5746615-3

[1] .000015 [0.00038] gold on leg

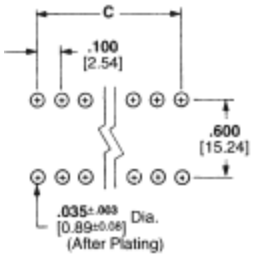

Recommended Mounting Hole Pattern
(for .094-.125 [2.39-3.18] thick pc boards)

Note: All part numbers are RoHS compliant.

Catalog 82012
Revised 4-12

www.te.com

Dimensions are shown for reference purposes only. Specifications subject to change.

Dimensions are in inches and millimeters unless otherwise specified.
USA: +1 (800) 522-6752

Canada: +1 (905) 475-6222
Mexico/C. Am.: +52 (0) 55-1106-0800
Latin/S. Am.: +54 (0) 11-4733-2200
Germany: +49 (0) 6251-133-1999
UK: +44 (0) 800-267666
France: +33 (0) 1-3420-8686
Netherlands: +31 (0) 73-6246-999
China: +86 (0) 400-820-6015

4-Row PCB Solder Transition Connectors

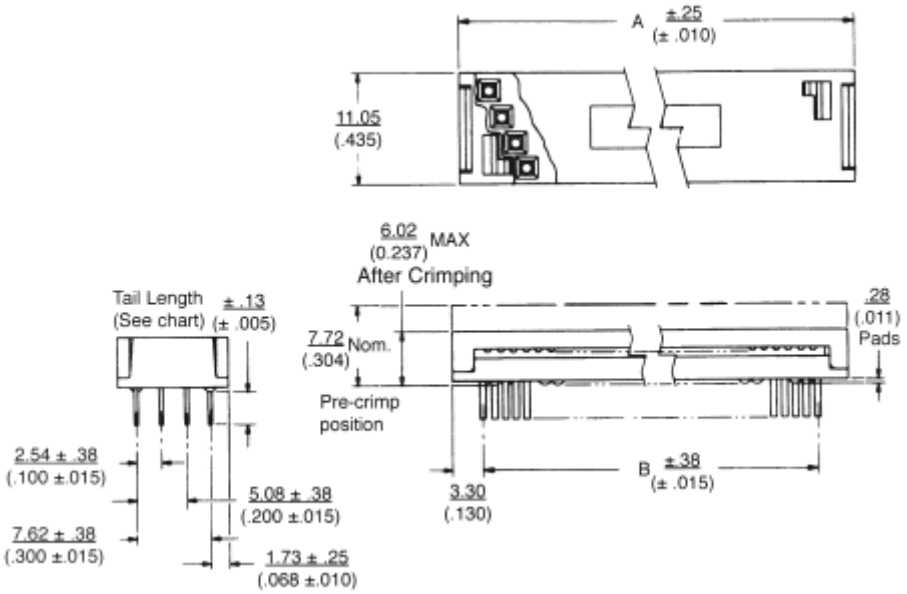

Technical Data

Color — Blue

Contact Material — Beryllium copper

Contact Plating — .000100-.000200 [0.00254-0.00508] tin over .000050 [0.00127] nickel underplate.

Contact Design — Dual slot, barrel shaped ("tulip") IDC with solder tail

Housing Material — Glass-filled thermoplastic, UL 94V-0 rated

Cable — 28-30 AWG solid or stranded, PVC insulated ribbon cable

Application Tooling

Die —
1-1437000-3 [T&B# 779-2153 ref]

Handtool —
1437000-6 [T&B# 779-2100 ref]

Bench Press (Manual) —
1437001-4 [T&B# 779-3200 ref]

Bench Press Platen —
5-1437000-6 [T&B# 779-3130 ref]

Bench Press Base Plate —
6-1437000-7 [T&B# 779-3153 ref]

609 Series, Military Polarized

No.of Pos.	Dimensions		Part Numbers			
			.100 Tail Length		.156 Tail Length	
	A	B	TE Connectivity	T&B (Reference Only)	TE Connectivity	T&B (Reference Only)
10	**.710** 18.03	**.450** 11.43	6437006-5	609-1003LF	—	—
14	**.910** 23.11	**.650** 16.51	6437006-8	609-1403LF	6437006-9	609-1443LF
16	**1.010** 25.65	**.750** 19.05	1-6437006-1	609-1603LF	—	—
20	**1.210** 30.73	**.950** 24.13	—	—	1-6437006-5	609-2043LF
26	**1.510** 38.35	**1.250** 31.75	1-6437006-8	609-2603LF	2-6437006-0	609-2643LF
34	**1.910** 48.51	**1.650** 41.91	2-6437006-2	609-3403LF	2-6437006-3	609-3443LF
44	**2.410** 61.21	**2.150** 54.61	2-6437006-9	609-4403LF	—	—
50	**2.710** 68.83	**2.450** 62.23	—	—	3-6437006-2	609-5043LF

Notes: Order by TE Part Number only.
All part numbers listed above are found on TE Customer Drawing 6437006-5.

Note: All part numbers are RoHS compliant.

Dimensions are shown for reference purposes only. Specifications subject to change.

Dimensions are in inches and millimeters unless otherwise specified.
USA: +1 (800) 522-6752

Canada: +1 (905) 475-6222
Mexico/C. Am.: +52 (0) 55-1106-0800
Latin/S. Am.: +54 (0) 11-4733-2200
Germany: +49 (0) 6251-133-1999

UK: +44 (0) 800-267666
France: +33 (0) 1-3420-8686
Netherlands: +31 (0) 73-6246-999
China: +86 (0) 400-820-6015

1-Row Horizontal Receptacles

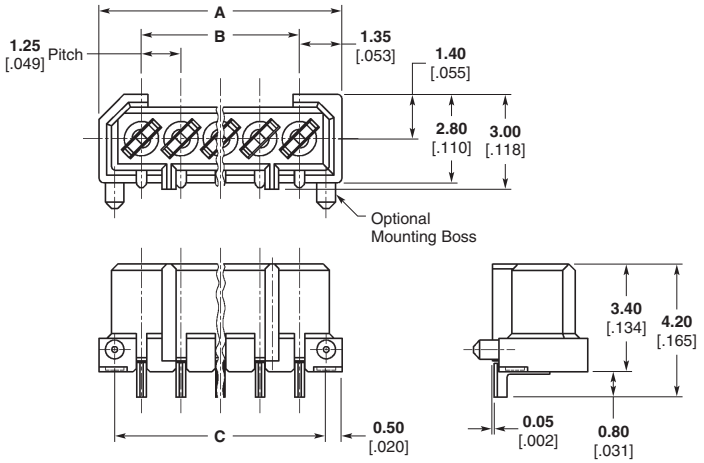

Material and Finish

Housing — Black PPS, UL 94V-0 rated

Contacts — Phosphor bronze, post tin plated over nickel underplate

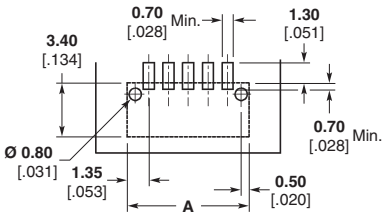

PCB Mounting Layout

1.25 Fine Pitch (FP) - 1-Row Horizontal Receptacles

	No. of Pos.	Dimensions			Part Numbers			
					With Mounting Bosses		Without Mounting Bosses	
		A	B	C	Tape	Bag	Tape	Bag
2.35 Slot Key	4	**6.45** .254	**3.75** .148	**5.45** .215	3-175637-4	3-174638-4	3-175629-4	3-174903-4
	5	**7.70** .303	**5.00** .197	**6.70** .264	3-175637-5	3-174638-5	3-175629-5	3-174903-5
	6	**8.95** .352	**6.25** .246	**7.95** .313	3-175637-6	3-174638-6	3-175629-6	3-174903-6
	7	**10.20** .402	**7.50** .295	**9.20** .362	3-175637-7	3-174638-7	3-175629-7	3-174903-7
	8	**11.45** .451	**8.75** .345	**10.45** .411	3-175637-8	3-174638-8	3-175629-8	3-174903-8
	10	**13.95** .549	**11.25** .443	**12.95** .510	4-175637-0	4-174638-0	4-175629-0	4-174903-0
	17	**22.70** .894	**20.00** .787	**21.70** .854	—	4-174638-7	4-175629-7	4-174903-7
	20	**26.45** 1.041	**23.75** .935	**25.45** 1.002	—	5-174638-0	—	5-174903-0

Note: All part numbers are RoHS compliant.

Catalog 82012
Revised 4-12

www.te.com

Dimensions are shown for reference purposes only. Specifications subject to change.

Dimensions are in inches and millimeters unless otherwise specified.
USA: +1 (800) 522-6752

Canada: +1 (905) 475-6222
Mexico/C. Am.: +52 (0) 55-1106-0800
Latin/S. Am.: +54 (0) 11-4733-2200
Germany: +49 (0) 6251-133-1999

UK: +44 (0) 800-267666
France: +33 (0) 1-3420-8686
Netherlands: +31 (0) 73-6246-999
China: +86 (0) 400-820-6015

Accessories

Flexible Pull Tabs

Material and Finish
Nylon, black

Part Number 120623-1

Related Product Data
Novo Connectors — pages 48-51
Ultra ATA Bus Connectors — pages 13-15

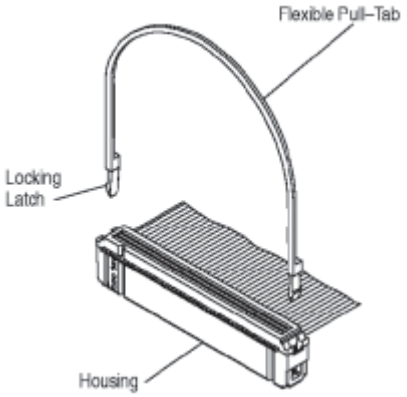

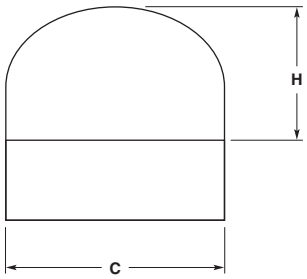

Approximate Installed Height of Part Number 120623-1 Above Connector

No. of Positions	Dimensions C	Dimensions H
10	**.680** 17.27	**1.806** 45.87
14	**.880** 22.35	**1.749** 44.42
16	**.980** 24.89	**1.721** 43.71
20	**1.180** 29.97	**1.664** 42.27
24	**1.380** 35.05	**1.607** 40.82
26	**1.480** 37.59	**1.578** 40.08
30	**1.680** 42.67	**1.521** 38.63
34	**1.880** 47.75	**1.464** 37.19
36	**1.980** 50.29	**1.436** 36.47
40	**2.180** 55.37	**1.379** 35.03
44	**2.380** 60.45	**1.322** 33.58
50	**2.680** 68.07	**1.236** 31.39
60	**3.180** 80.77	**1.094** 27.79
64	**3.380** 85.85	**1.037** 26.34

Note: Cannot be used together with a strain relief.

Universal I/O Latches

Material and Finish
Polyester, black

Related Product Data
Universal I/O Pin Connectors — pages 45 and 46
Latch Removal Tool Part Number 91269-1

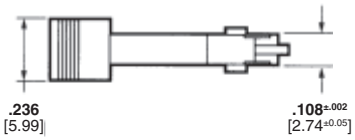

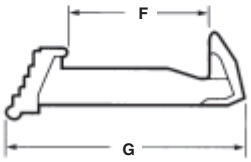

Mates to Receptacles	Dimensions F	Dimensions G	Part Number
Without Strain Relief	**.416** 10.57	**.768** 19.51	111451-1
With Strain Relief	**.576** 14.63	**.928** 23.57	111451-3

Military Polarizers

Material and Finish
Thermoplastic, black

Related Product Data
Universal I/O Pin Connectors — pages 45 and 46

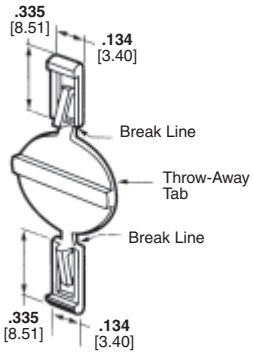

Part Numbers:
499991-2 (packaged, 50 per bag)
499991-3 (packaged, 1000 per box)

The snap-in polarizer provides military polarization.

Note: All part numbers are RoHS compliant.

Catalog 82012
Revised 4-12

www.te.com

Dimensions are shown for reference purposes only. Specifications subject to change.

Dimensions are in inches and millimeters unless otherwise specified.
USA: +1 (800) 522-6752

Canada: +1 (905) 475-6222
Mexico/C. Am.: +52 (0) 55-1106-0800
Latin/S. Am.: +54 (0) 11-4733-2200
Germany: +49 (0) 6251-133-1999

UK: +44 (0) 800-267666
France: +33 (0) 1-3420-8686
Netherlands: +31 (0) 73-6246-999
China: +86 (0) 400-820-6015

Accessories (Continued)

Keying Plugs

Material and Finish
Thermoplastic, see table for color

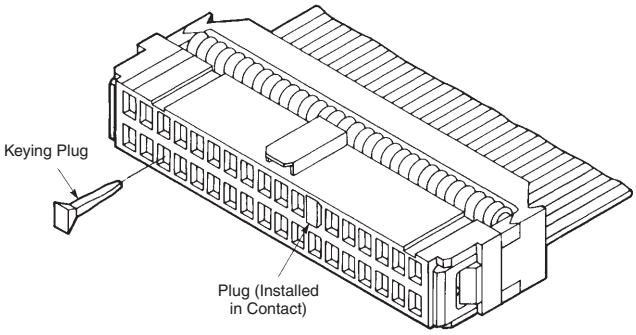

Typical Application

Key Plug 111620-1

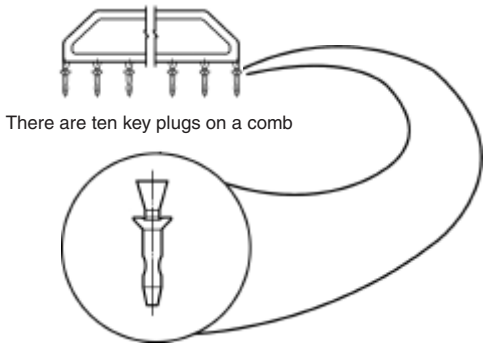

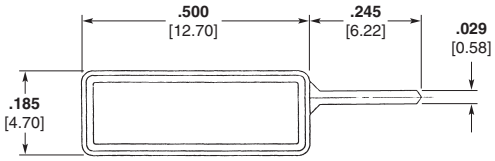

Polarizing Key
1-1437023-2

Receptacle Connector Series	Catalog Pages	Keying Plug Part Number	Style	Color
2 mm Rcpt. Connectors	16, 17	111620-1	Comb	Black
609 Series Female Socket Connectors	54, 55	1-1437023-2 T&B 609-0000 (Ref.)	Single	Blue
622 Series Female Socket Connectors	52, 53	1-1437023-2 T&B 609-0000 (Ref.)	Single	Blue
636 Series Female Socket Connectors	52, 53	1-1437023-2 T&B 609-0000 (Ref.)	Single	Blue

Order by TE Part Number only.

Note: All part numbers are RoHS compliant.

Catalog 82012
Revised 4-12

www.te.com

Dimensions are shown for reference purposes only. Specifications subject to change.

Dimensions are in inches and millimeters unless otherwise specified.
USA: +1 (800) 522-6752

Canada: +1 (905) 475-6222
Mexico/C. Am.: +52 (0) 55-1106-0800
Latin/S. Am.: +54 (0) 11-4733-2200
Germany: +49 (0) 6251-133-1999

UK: +44 (0) 800-267666
France: +33 (0) 1-3420-8686
Netherlands: +31 (0) 73-6246-999
China: +86 (0) 400-820-6015

Accessories (Continued)

Keying Plugs (Continued)

Material and Finish

Thermoplastic, see table for color

Receptacle Connector Series	Catalog Pages	Keying Plug Part Number	Style	Color
Novo Connectors	48-51	499712-1	Single	Black
		104072-1	Comb	
Ultra ATA Bus Connectors	13-15	499712-1	Single	Black
		104072-1	Comb	

Order by TE Part Number only.

Part Number 499712-1

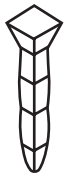

Key Plug
(Plugs into Contact)

Alternate Configuration
Keying Plug Part No. 104072-1
(10 Keying Plugs per Comb)

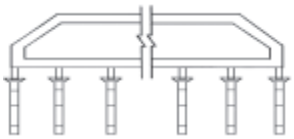

Note: All part numbers are RoHS compliant.

Dimensions are shown for reference purposes only. Specifications subject to change.

Dimensions are in inches and millimeters unless otherwise specified.
USA: +1 (800) 522-6752

Canada: +1 (905) 475-6222
Mexico/C. Am.: +52 (0) 55-1106-0800
Latin/S. Am.: +54 (0) 11-4733-2200
Germany: +49 (0) 6251-133-1999

UK: +44 (0) 800-267666
France: +33 (0) 1-3420-8686
Netherlands: +31 (0) 73-6246-999
China: +86 (0) 400-820-6015

Accessories (Continued)

Pull Loops, Permanent (for Receptacles and Pin Connectors)

Material and Finish

Natural color PVC, 94-VTM-1 rating (thin material)

Related Product Data

Use with:

Female Socket Connectors — pages 52-55

Ultra ATA Bus Connectors — pages 13-15

2 mm Receptacle Connectors — pages 16 and 17

Novo Connectors — pages 48-51

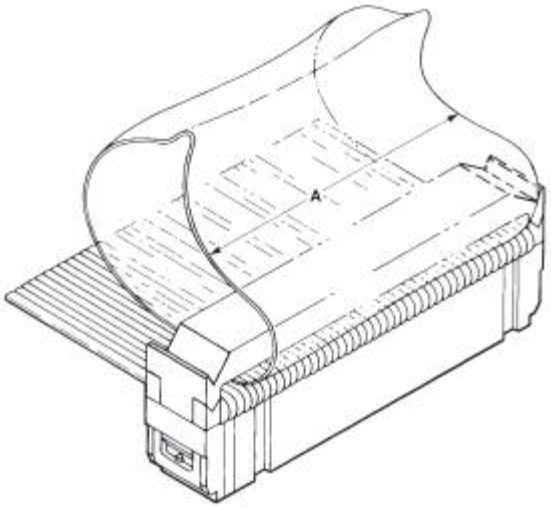

Note: This pull loop is installed manually between the cover and strain relief, and cannot be used without strain relief.

No. of Positions				Dimension A	Pull Loop Part No.
Female Socket Conns.	Ultra ATA Bus Conns.	2 mm Rcpt. Conns.	Novo Conns.		
10	—	12, 14, 16	10	**.44** 11.18	5088450-2
14	—	20	14	**.64** 16.26	5088450-3
16	—	22	16	**.74** 18.80	5088450-4
20	—	24, 26	20	**.88** 22.35	5088450-5
24	—	—	24	**1.08** 27.43	5088450-6
26	—	30, 34, 40	26	**1.18** 29.97	5088450-7
30	—	—	30	**1.38** 35.05	1-5088450-2
34	—	44	34	**1.58** 40.13	5088450-8
40	40	50	40	**1.82** 46.23	5088450-9
50	—	—	50	**2.32** 58.93	1-5088450-0
60	—	—	60	**2.80** 71.12	1-5088450-1

Note: All part numbers are RoHS compliant.

Dimensions are shown for reference purposes only. Specifications subject to change.

Dimensions are in inches and millimeters unless otherwise specified.
USA: +1 (800) 522-6752

Canada: +1 (905) 475-6222
Mexico/C. Am.: +52 (0) 55-1106-0800
Latin/S. Am.: +54 (0) 11-4733-2200
Germany: +49 (0) 6251-133-1999

UK: +44 (0) 800-267666
France: +33 (0) 1-3420-8686
Netherlands: +31 (0) 73-6246-999
China: +86 (0) 400-820-6015

Accessories (Continued)

Strain Relief for Universal I/O Pin Connectors Without Mounting Ears

Material and Finish

Glass-filled polyester, black

Related Product Data

Universal I/O Pin Connectors — page 45

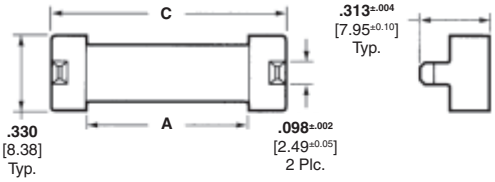

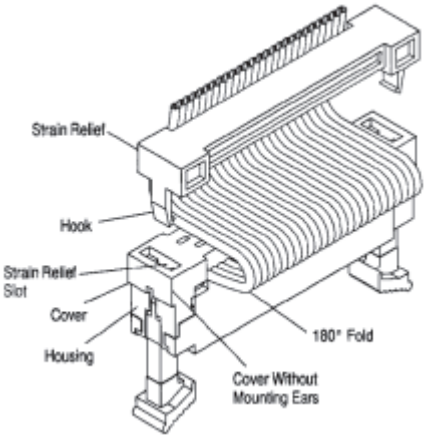

No. of Pos.	Dimensions A	Dimensions B	Dimensions C	Part Number
10	**.520** 13.21	**.766** 19.46	**.940** 23.88	111547-1
14	**.720** 18.29	**.966** 24.54	**1.140** 28.96	111547-2
16	**.820** 20.83	**1.066** 27.08	**1.240** 31.50	111547-3
20	**1.020** 25.91	**1.266** 32.16	**1.440** 36.58	111547-4
24	**1.220** 30.99	**1.466** 37.24	**1.640** 41.66	111547-5
26	**1.320** 33.53	**1.566** 39.78	**1.740** 44.20	111547-6
30	**1.520** 38.61	**1.766** 44.86	**1.940** 49.28	111547-7
34	**1.720** 43.69	**1.966** 49.94	**2.140** 54.36	111547-8
40	**2.020** 51.31	**2.266** 57.56	**2.440** 61.98	111547-9
44	**2.220** 56.39	**2.466** 62.64	**2.640** 67.06	1-111547-0
50	**2.520** 64.01	**2.766** 70.26	**2.940** 74.68	1-111547-1
60	**3.020** 76.71	**3.266** 82.96	**3.440** 87.38	1-111547-2
64	**3.220** 81.79	**3.466** 88.04	**3.640** 92.56	1-111547-3

Strain Relief for 609 Series (Tulip Contact) Female Socket Connectors

Material and Finish

Glass-filled polyester, blue

Related Product Data

Female Socket Connectors — page 54 and 55

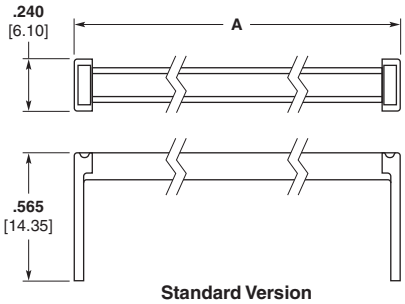

Standard Version

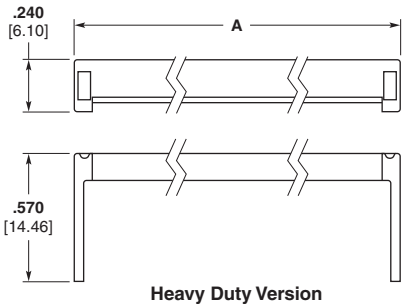

Heavy Duty Version

No. of Pos.	Dimension A	Type	Part Number: TE Connectivity	Part Number: T&B (Ref. Only)
6	**.472** 11.99	Standard	2-1437020-1	609-0631
10	**.672** 17.07	Heavy Duty	3-1437020-7	609-1031HD
		Standard	3-1437020-5	609-1031
14	**.872** 22.15	Heavy Duty	5-1437020-1	609-1431HD
		Standard	4-1437020-9	609-1431
16	**.972** 24.69	Heavy Duty	6-1437020-6	609-1631HD
		Standard	6-1437020-4	609-1631
20	**1.172** 29.77	Heavy Duty	8-1437020-6	609-2031HD
		Standard	8-1437020-4	609-2031
24	**1.372** 34.85	Standard	9-1437020-4	609-2431
26	**1.472** 37.39	Heavy Duty	1-1437021-2	609-2631HD
		Standard	1-1437021-0	609-2631
34	**1.872** 47.55	Heavy Duty	3-1437021-2	609-3431HD
		Standard	3-1437021-0	609-3431
40	**2.172** 55.17	Heavy Duty	5-1437021-5	609-4031HD
		Standard	5-1437021-3	609-4031
50	**2.672** 67.87	Heavy Duty	8-1437021-1	609-5031HD
		Standard	7-1437021-9	609-5031
64	**3.372** 85.65	Heavy Duty	1-1437022-3	609-6431HD

Note: Heavy duty part numbers are listed on TE customer drawing 3-1437020-7. Standard part numbers are listed on TE customer drawing 2-1437020-1.
All part numbers are RoHS compliant.

Dimensions are shown for reference purposes only. Specifications subject to change.

Dimensions are in inches and millimeters unless otherwise specified.
USA: +1 (800) 522-6752

Canada: +1 (905) 475-6222
Mexico/C. Am.: +52 (0) 55-1106-0800
Latin/S. Am.: +54 (0) 11-4733-2200
Germany: +49 (0) 6251-133-1999

UK: +44 (0) 800-267666
France: +33 (0) 1-3420-8686
Netherlands: +31 (0) 73-6246-999
China: +86 (0) 400-820-6015

Accessories (Continued)

Strain Relief for Novo and Ultra ATA Bus Connectors

Material and Finish

Glass-filled polyester, black

Related Product Data

Novo Connectors — pages 48-51

Ultra ATA Bus Connectors — pages 13-15

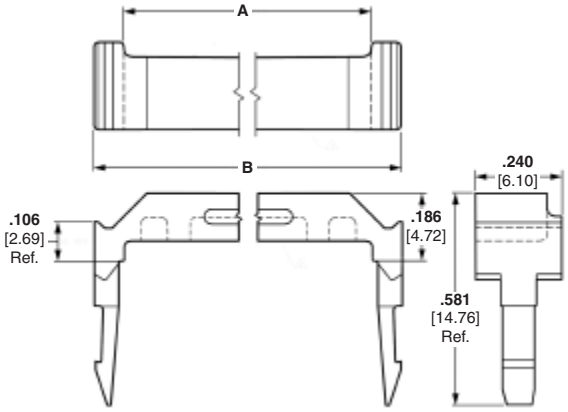

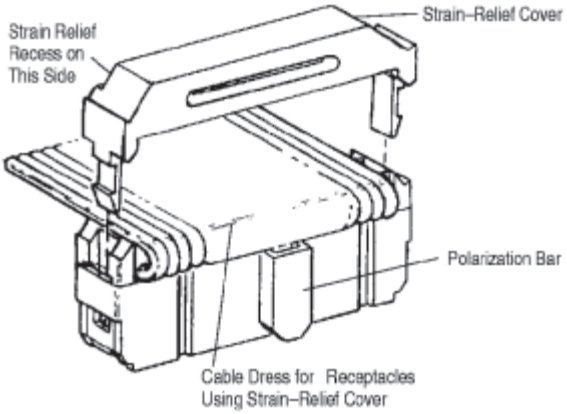

No. of Pos.	Dimensions A	Dimensions B	Part Number
10	**.534** 13.56	**.690** 17.53	499252-5
14	**.734** 18.64	**.890** 22.61	499252-9
16	**.834** 21.18	**.990** 25.15	499252-8
20	**1.034** 26.26	**1.190** 30.23	499252-2
24	**1.234** 31.34	**1.390** 35.31	1-499252-0
26	**1.334** 33.88	**1.490** 37.85	499252-3
30	**1.534** 38.96	**1.690** 42.93	1-499252-2
34	**1.734** 44.04	**1.890** 48.01	499252-6
40	**2.034** 51.66	**2.190** 55.63	499252-1*
44	**2.234** 56.74	**2.390** 60.71	1-499252-1
50	**2.534** 64.36	**2.690** 68.33	499252-4
60	**3.034** 77.06	**3.190** 81.03	499252-7
64	**3.234** 82.14	**3.390** 86.11	1-499252-3

*Ultra ATA Strain Relief is 499252-1 only.

Strain Relief for 2 mm Receptacle Connectors

Material and Finish

Glass-filled polyester, black

Related Product Data

2 mm Receptacle Connectors — pages 16 and 17

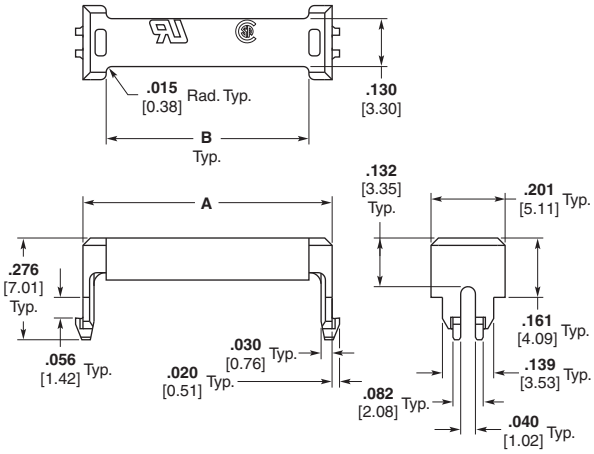

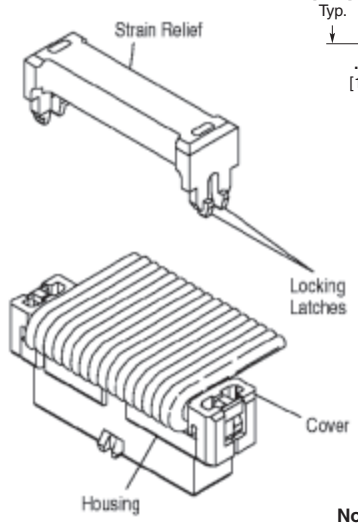

No. of Pos.	Dimensions A	Dimensions B	Part Number
8	**.440** 11.18	**.314** 7.98	1-111614-6
10	**.518** 13.16	**.392** 9.96	111614-1
12	**.596** 15.14	**.470** 11.94	1-111614-7
14	**.676** 17.17	**.550** 13.97	111614-2
16	**.755** 19.18	**.629** 15.98	111614-3
20	**.912** 23.16	**.786** 19.96	111614-4
22	**.991** 25.17	**.865** 21.97	1-111614-5
24	**1.070** 27.18	**.944** 23.98	111614-5
26	**1.148** 29.16	**1.022** 25.96	111614-6
30	**1.306** 33.17	**1.180** 29.97	111614-7
34	**1.463** 37.16	**1.337** 33.96	111614-8
40	**1.700** 43.18	**1.574** 39.98	111614-9
44	**1.857** 47.17	**1.731** 43.97	1-111614-0
50	**2.093** 53.16	**1.967** 49.96	1-111614-1

Note: All part numbers are RoHS compliant.

Catalog 82012
Revised 4-12

www.te.com

Dimensions are shown for reference purposes only. Specifications subject to change.

Dimensions are in inches and millimeters unless otherwise specified.

USA: +1 (800) 522-6752
Canada: +1 (905) 475-6222
Mexico/C. Am.: +52 (0) 55-1106-0800
Latin/S. Am.: +54 (0) 11-4733-2200
Germany: +49 (0) 6251-133-1999
UK: +44 (0) 800-267666
France: +33 (0) 1-3420-8686
Netherlands: +31 (0) 73-6246-999
China: +86 (0) 400-820-6015

Accessories (Continued)

Strain Relief for 622 and 636 Series Female Socket Connectors

Material and Finish

Glass-filled PBT, see table for color

Related Product Data

Female Socket Connectors — pages 52 and 53

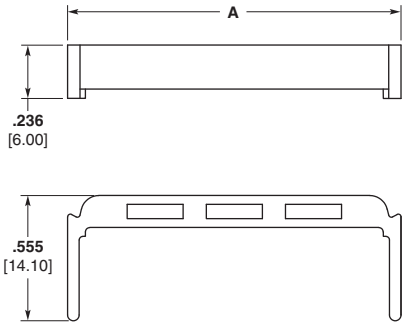

No. of Pos.	Dimension C	Color	Part Number	
			TE Connectivity	T&B (Ref. Only)
6	**.477** 12.12	Blue	2-1437023-9	622-0631
		Black	1-1437026-9	636-0631
10	**.677** 17.20	Blue	4-1437023-7	622-1031
		Black	3-1437026-9	636-1031
14	**.877** 22.28	Blue	7-1437023-1	622-1431
		Black	6-1437026-6	636-1431
16	**.977** 24.82	Blue	8-1437023-9	622-1631
		Black	8-1437026-5	636-1631
20	**1.177** 29.90	Blue	1437024-5	622-2031
		Black	1437027-7	636-2031
24	**1.377** 34.98	Blue	1-1437024-6	622-2431
		Black	5-1437011-3	636-2431
26	**1.477** 37.52	Blue	2-1437024-8	622-2631
		Black	3-1437027-4	636-2631
30	**1.677** 42.60	Blue	4-1437024-0	622-3031
		Black	6-1437011-6	636-3031
34	**1.877** 47.68	Blue	5-1437024-3	622-3431
		Black	8-1437027-0	636-3431
40	**2.177** 55.30	Blue	8-1437024-3	622-4031
		Black	3-1437028-4	636-4031
50	**2.677** 68.00	Blue	1-1437025-2	622-5031
		Black	6-1437028-8	636-5031
60	**3.177** 80.70	Black	9-1437028-5	636-6031
64	**3.377** 85.78	Blue	4-1437025-0	622-6431
		Black	1437029-2	636-6431

Note: These part numbers are listed on TE customer drawing 1-1437026-9.

Note: All part numbers are RoHS compliant.

Dimensions are shown for reference purposes only. Specifications subject to change.

Dimensions are in inches and millimeters unless otherwise specified.
USA: +1 (800) 522-6752

Canada: +1 (905) 475-6222
Mexico/C. Am.: +52 (0) 55-1106-0800
Latin/S. Am.: +54 (0) 11-4733-2200
Germany: +49 (0) 6251-133-1999

UK: +44 (0) 800-267666
France: +33 (0) 1-3420-8686
Netherlands: +31 (0) 73-6246-999
China: +86 (0) 400-820-6015

Ribbon Cable Assembly Machines (R-CAM)

Product Facts

- **Terminates 28 AWG [0.08 mm2] .050 [1.27] centerline and 30 AWG [0.05 mm2] .025 [0.64] centerline cable to a variety of connectors**
- **Automatic in-process electrical testing — tests all circuits for opens, shorts and high-voltage breakdown (up to 1,000 volts for receptacles, 800 volts for card edge connectors and 300 volts for .025 [0.64] centerline connectors); rejects cable assemblies failing any of these tests**
- **Operated by a user-friendly, interactive touchscreen — or a keyboard on the R-CAM 4**
- **Self-diagnostics shut down the machine when a malfunction occurs, pinpoint the malfunction, and identify it on the screen**
- **Produced under a Quality Management System certified to ISO 9001**

A copy of the certificate is available upon request.

The R-CAM 4, pictured above, is the newest fully automatic Ribbon Cable Assembly Machine for producing and testing daisy-chained ribbon cable assemblies. Enhancements of this model include the capability to process pre-manufactured slit-and-twist cable and the ability to produce assemblies with up to 10 connectors.

The R-CAM 2A, 3A, and 4 terminate 28 AWG [0.08 mm^2], .050 [1.27] centerline cable to a variety of connectors. The R-CAM 4 will also terminate 30 AWG [0.05 mm^2] .025 [0.64] centerline cable.

All of the R-CAM models automatically perform an in-process electrical test of all circuits for opens and shorts. In addition, all models automatically test the assembly for high-voltage breakdown up to 1,000 volts, depending on the machine and connector style. The purpose of this test is to detect gaps that may have been created during assembly that could eventually short out when in use. If an assembly fails any of these tests, the machine will shear the cable off at that point and automatically discard it into an alternate bin.

These machines are programmed and operated with an interactive touchscreen that allows operators to access manual, set-up, run, and edit modes through easy-to-follow menu-driven prompts.

Self-diagnostics shut down the machine if a malfunction — such as misloaded connectors or incorrectly fed cable — is detected, pinpoint the malfunction, and identify it on the touchscreen.

Models 2A and 3A are available in 120 or 220 VAC, 8 A, 50 or 60 Hz. Model 4 operates at 120 or 220 VAC, 50-60 Hz, single phase, 15A.

The R-CAM 2A and 3A require a minimum air supply of 80 psi [5.52 bar] at 8 scfm [0.0038m^3/s]. The R-CAM 4 requires 80 psi [5.52 bar] at 12 scfm [0.0057 m^3/s].

Need more information?
For more information, specifically about tooling, call TE at the numbers listed below.

Catalog 82012
Revised 4-12

www.te.com

Dimensions are shown for reference purposes only. Specifications subject to change.

Dimensions are in inches and millimeters unless otherwise specified.
USA: +1 (800) 522-6752

Canada: +1 (905) 475-6222
Mexico/C. Am.: +52 (0) 55-1106-0800
Latin/S. Am.: +54 (0) 11-4733-2200
Germany: +49 (0) 6251-133-1999

UK: +44 (0) 800-267666
France: +33 (0) 1-3420-8686
Netherlands: +31 (0) 73-6246-999
China: +86 (0) 400-820-6015

Comparison of R-CAM 2A, R-CAM 3A and R-CAM 4

Machine Model	R-CAM 2A	R-CAM 3A	R-CAM 4
Part Number*	**760700-❑**	**761900-❑**	**318800-❑**
Cable Size	28 AWG [0.08 mm²], .050 [1.27] centerline	28 AWG [0.08 mm²], .050 [1.27] centerline	28 AWG [0.08 mm²], .050 [1.27] centerline and 30 AWG [0.05 mm²], .025 [0.64] centerline
Cable Assembly Configurations (Refer to page 73)	Maximum cable length of 48 [1 220]	Maximum cable length of 105 [2 665]	Maximum cable length of 100 [2 540]
	Produces one- to four-connector assemblies with unterminated tail lengths up to 12 [305]	Produces one- or two-connector assemblies with unterminated tail lengths up to 24 [610]	Produces one- to 10-connector assemblies with unterminated tail lengths up to 24 [610]
	Trailing connectors can be oriented up or down	Trailing connectors can be oriented up or down	Trailing connectors can be oriented up or down
	—	—	Automatically processes and tests assemblies produced with pre-manufactured slit-and-twist cable
Production Rates (Refer to page 72)	Depending on cable lengths, can apply and test up to 1 670 connectors per hour	Depending on cable lengths, can apply and test up to 2 000 connectors per hour	Depending on cable lengths, can apply and test up to 1 050 connectors per hour
Size	108 [2 745] W x 54 [1 370] D x 60 [1 525] H; 750 lb [340 kg]	48 [1 220] W x 48 [1 220] D x 62 [1 575] H; 630 lb [286 kg]	68 [1 730] W x 58 [1 475] D x 72 [1 830] H; 1 300 lb [590 kg]
Programmable	Operated and programmed by a touchscreen	Operated and programmed by a touchscreen	Operated and programmed by a touchscreen or a keyboard
	Parameters for up to 130 cable assemblies can be retained in memory	Parameters for up to 150 cable assemblies can be retained in memory	Parameters for up to 1 000 cable assemblies can be retained in memory
	Another menu displays production totals or a log of the machine events	Another menu displays production totals or a log of the machine events	—
Testing	Automatically stops after each or three consecutive assemblies are rejected, as programmed by the operator	Automatically stops when either a consecutive number of assemblies or a percentage of the batch run are rejected, as programmed by the operator	Automatically stops each time a malfunction is detected
Changeover	Requires an average of 25 minutes, depending on assembly size	Requires an average of 15 minutes, depending on assembly size	Requires an average of 20 minutes to 1 hour, depending on assembly size and type

***Note**: Machine may require accessories. Before ordering, contact TE at the numbers listed below.

Catalog 82012
Revised 4-12

www.te.com

Dimensions are shown for reference purposes only. Specifications subject to change.

Dimensions are in inches and millimeters unless otherwise specified.
USA: +1 (800) 522-6752

Canada: +1 (905) 475-6222
Mexico/C. Am.: +52 (0) 55-1106-0800
Latin/S. Am.: +54 (0) 11-4733-2200
Germany: +49 (0) 6251-133-1999

UK: +44 (0) 800-267666
France: +33 (0) 1-3420-8686
Netherlands: +31 (0) 73-6246-999
China: +86 (0) 400-820-6015

Typical Production Rates (Assemblies/Hour)

Machine Model	Connectors Per Assembly	Length 4 [100]	8 [205]	24 [160]	48 [1 220]	100 [2 540]
R-CAM 2A	1	665	620	—	—	—
	2	570	500	405	300	—
	3	475	460	375	280	—
	4	—	420	360	255	—
R-CAM 3A	2	1 075	950	780	660	500
R-CAM 4	4	—	275	265	255	—
	5	—	205	200	190	—
	6	—	170	165	160	—
	10	—	—	—	115	105

Note: Actual production rates may vary depending on the cable assembly configuration.

Available Tooling

Note: Call TE at the numbers listed below for part numbers or availability.

Tooling for Connectors		Number of Positions R-CAM 2A	R-CAM 3A	R-CAM 4 ††
Ultra Novo Receptacles		—	—	40
AMPLIMITE .050 Series Connectors		—	—	68
AMPLIMITE HDF-20 D-Sub.	Plugs	15, 25, 37	9, 15, 25, 37	68 and 80 (Lead and Trail Modules)
	Receptacles			68 and 80 (Lead Module Only)
.100 x .100 DIP Plugs		One End Only, 20–64	One End Only, 10–64	Available in future
Card Edge Connectors*		20–64	10–64	20–50 (10–64 Available in future)
Novo Receptacles*		20–64	10–64	10-64
2 mm Receptacles		—	12–50	—
Universal I/O Pin Connectors		One End Only, 20–64	—	Trail Module Only

* Supplied with the R-CAM 2A and R-CAM 3A only.
† Reel fed version.
†† Order Connector Specific Tooling Packages / Feed Shear Tooling separately.

Products Applied

AMPLIMITE HDF-20 D-Sub. Plugs

AMPLIMITE HDF-20 D-Sub. Receptacles

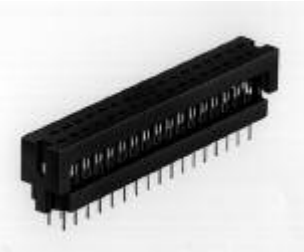
.100 x .100 DIP Plugs

Card Edge Connectors

Novo Receptacles

2 mm Receptacles

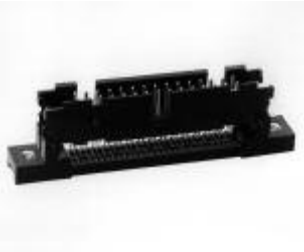
Universal I/O Pin Connectors

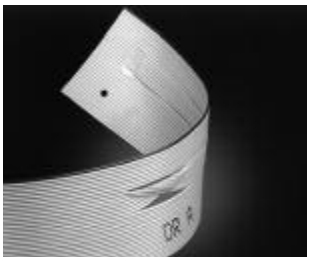
Pre-manufactured Slit-and-Twist Cable (R-CAM 4 only)

Note: For more product information, call TE at the numbers listed below.

Catalog 82012
Revised 4-12

www.te.com

Dimensions are shown for reference purposes only. Specifications subject to change.

Dimensions are in inches and millimeters unless otherwise specified.
USA: +1 (800) 522-6752

Canada: +1 (905) 475-6222
Mexico/C. Am.: +52 (0) 55-1106-0800
Latin/S. Am.: +54 (0) 11-4733-2200
Germany: +49 (0) 6251-133-1999

UK: +44 (0) 800-267666
France: +33 (0) 1-3420-8686
Netherlands: +31 (0) 73-6246-999
China: +86 (0) 400-820-6015

Cable Assembly Configurations

R-CAM 2A

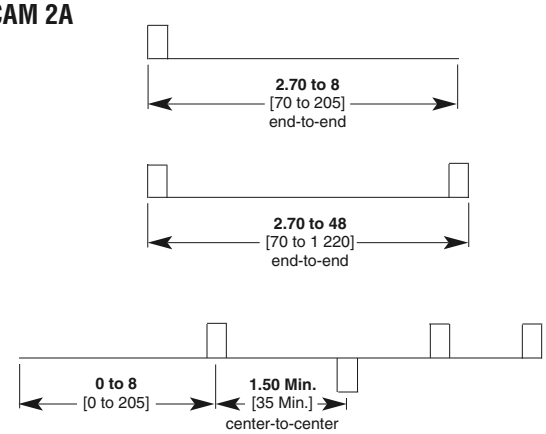

R-CAM 3A

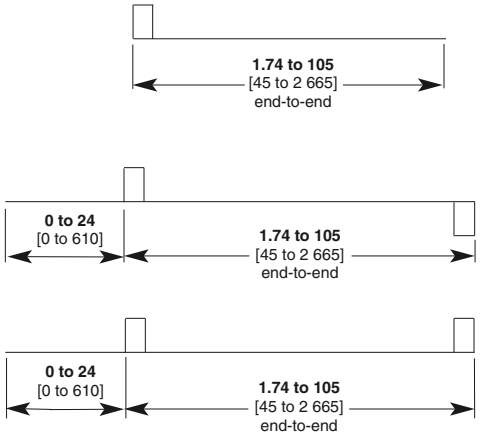

R-CAM 4

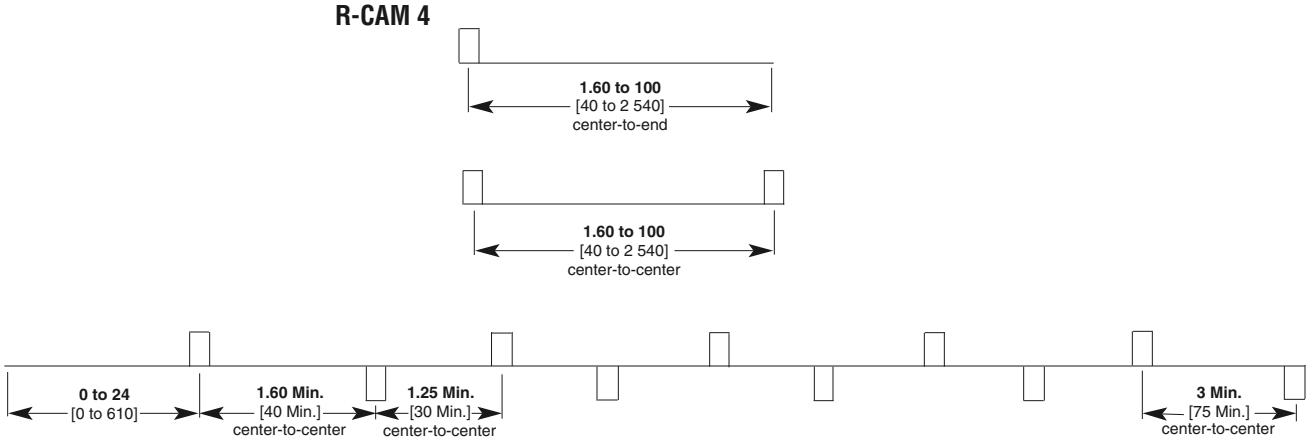

Dimensions are shown for reference purposes only. Specifications subject to change.

Dimensions are in inches and millimeters unless otherwise specified.
USA: +1 (800) 522-6752

Canada: +1 (905) 475-6222
Mexico/C. Am.: +52 (0) 55-1106-0800
Latin/S. Am.: +54 (0) 11-4733-2200
Germany: +49 (0) 6251-133-1999

UK: +44 (0) 800-267666
France: +33 (0) 1-3420-8686
Netherlands: +31 (0) 73-6246-999
China: +86 (0) 400-820-6015

Application Tooling

Manual Arbor Frame Assembly, Part No. 91085-2

Bench frame for applying a variety of IDC connectors, including AMPMODU MT and CHAMP. Features adjustable ram and handle, and a slide base. Tooling is mounted to the ram and into the tracks of the base plate.

Hand Tool Kit—Part No. 768340-1

Terminating kit for .050 [1.27] centerline ribbon cable with 28 or 26 AWG [0.08 or 0.15 mm^2] stranded or solid, or 30 AWG [0.05 mm^2] solid conductors. Includes commercial grade hand tool with ratchet control for complete termination cycle, base assembly, bench-mount, tooling sets for standard and Novo receptacles, card edge connectors and D-Sub HDF low-profile connectors, and a carrying case.

Pneumatic Auto-Cycle Unit, Part No. 91112-3

Basically an air-powered version of Manual Arbor Frame Assembly 91085-2. Features adjustable ram and cycle time, and automatic cycling when the lower assembly is slid into the frame to the rear of the base plate. Includes a guard around the frame opening.

Tooling Instruction Sheets

408-7777—Manual Arbor Frame Assembly

408-6732—Pneumatic Auto-Cycle Assembly

408-9828—Hand Tool Kit 768340-1 for Connector-Specific Kits

Pneumatic Foot Pedal Unit Part No. 91112-2

Foot pedal indicates cycle—features adjustable ram and cycle time.

Catalog 82012
Revised 4-12

www.te.com

Dimensions are shown for reference purposes only. Specifications subject to change.

Dimensions are in inches and millimeters unless otherwise specified.
USA: +1 (800) 522-6752

Canada: +1 (905) 475-6222
Mexico/C. Am.: +52 (0) 55-1106-0800
Latin/S. Am.: +54 (0) 11-4733-2200
Germany: +49 (0) 6251-133-1999

UK: +44 (0) 800-267666
France: +33 (0) 1-3420-8686
Netherlands: +31 (0) 73-6246-999
China: +86 (0) 400-820-6015

Low Profile Headers

Product Facts

- **Available in selected positions 10 thru 60**
- **Flame retardant, thermoplastic housings, 94V-0 rated**
- **Vertical and right-angle versions available in double row configurations**
- **Available in .025 [0.64] square drawn wire posts**
- **Wash out clearance for flux removal**
- **Mates with Ribbon Cable Connectors**
- **Available with and without eject latches**
- **Available with and without "kinked" soldertails for PCB retention**
- **Headers are recognized under the Component Program of Underwriters Laboratories Inc. File No. E28476**
- **Headers are certified by Canadian Standards Association, File No. LR 7189**
- **Low profile IDC headers are recognized under the Component Program of Underwriters Laboratories Inc. File No. E60980, Vol. 5**

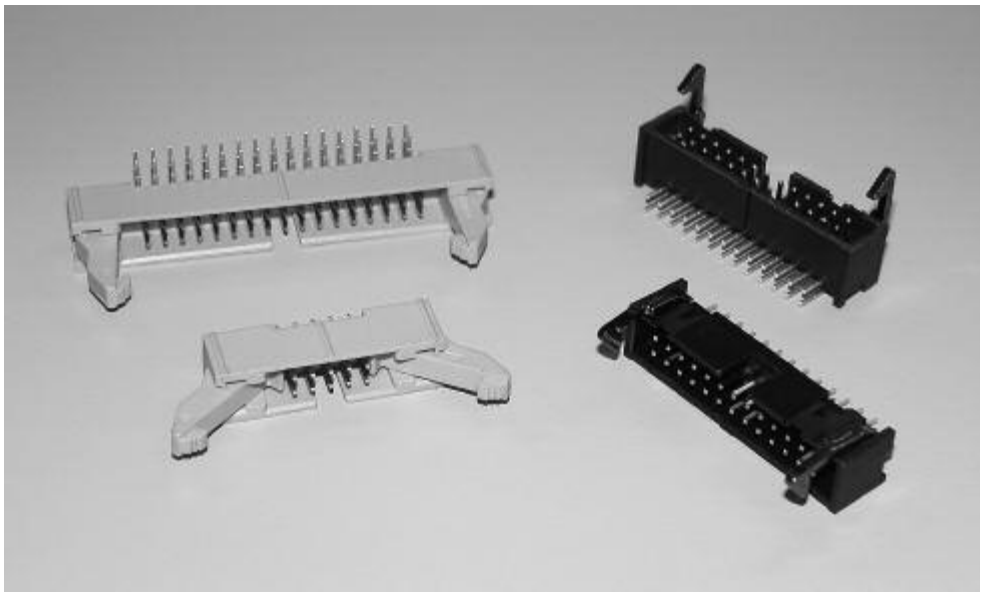

Performance Characteristics

Electrical

Insulation Resistance — 5,000 megohms minimum initial

Dielectric Withstanding Voltage — 1,000 V rms at sea level

Current — 1 ampere maximum per contact

Operating Voltage — 250 VAC

Environmental

Operating Temperature — -65°C to +105°C

Technical Documents

Product Specifications
108-40018

Catalog 82012
Revised 4-12

www.te.com

Dimensions are shown for reference purposes only. Specifications subject to change.

Dimensions are in inches and millimeters unless otherwise specified.
USA: +1 (800) 522-6752

Canada: +1 (905) 475-6222
Mexico/C. Am.: +52 (0) 55-1106-0800
Latin/S. Am.: +54 (0) 11-4733-2200
Germany: +49 (0) 6251-133-1999

UK: +44 (0) 800-267666
France: +33 (0) 1-3420-8686
Netherlands: +31 (0) 73-6246-999
China: +86 (0) 400-820-6015

Low Profile Pin Headers, Center and Dual Polarized, .100 x .100 [2.54 x 2.54] Centerlines

Vertical PCB Mount .025 [0.64] Square Post (Mating End)

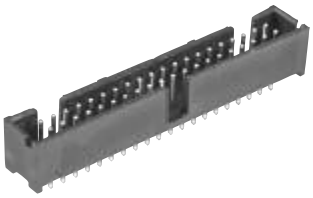

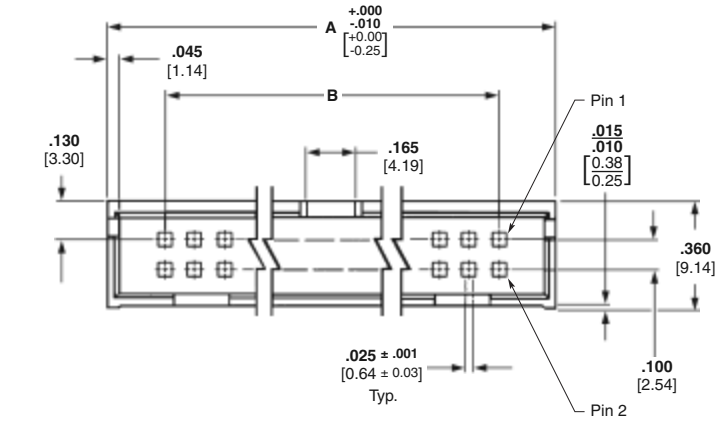

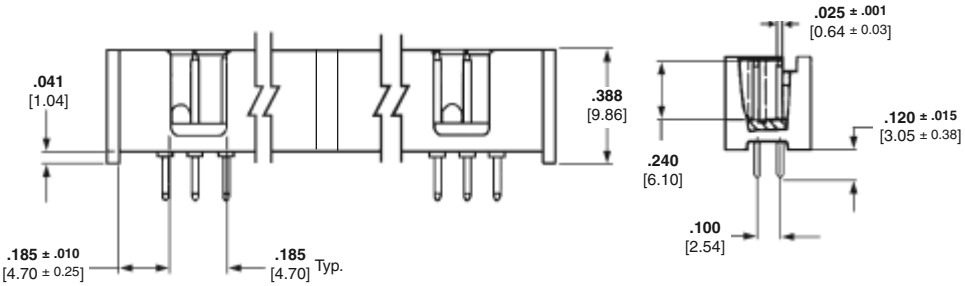

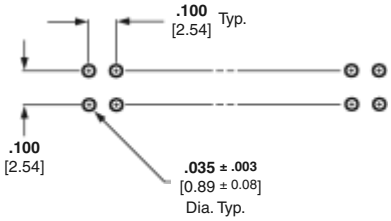

Recommended PC Board Hole Layout For Manual Insertion

Material and Finish

Housing — Glass-filled nylon, UL 94V-0 rated, black

Posts — Brass, plated as follows:

Plating A — Duplex plated, gold flash over palladium-nickel, .000030 [0.00076] min. total on mating surfaces, .000100 [0.00254] min. tin on solder area, with entire post underplated .000050 [0.00127] min. nickel **or** .000030 [0.00076] min. gold on mating surfaces, .000100 [0.00254] min. tin on solder area, with entire post underplated .000050 [0.00127] min. nickel

Plating B — Duplex plated, gold flash over palladium-nickel, .000015 [0.00038] min. total on mating surfaces, .000100 [0.00254] min. tin on solder area, with entire post underplated .000050 [0.00127] min. nickel **or** .000015 [0.00038] min. gold on mating surfaces, .000100 [0.00254] min. tin on solder area, with entire post underplated .000050 [0.00127] min. nickel

Related Product Data

Electrical Characteristics — page 75

Mateable Connectors —

AMPMODU Wire-Applied Receptacles

AMPMODU Board Mount Receptacles

Short Point Wire-Applied Connectors

Novo Receptacles and Female Socket Connectors, 609, 622 and 636 Series — pages 48-55

No. of Pos.	Dimensions		Post Plating/Part Nos.	
	A	B	Plating A	Plating B
10	**.800** [20.32]	**.400** [10.16]	5103309-1	5103308-1
14	**1.000** [25.40]	**.600** [15.24]	5103309-2	5103308-2
16	**1.100** [27.94]	**.700** [17.78]	5103309-3	5103308-3
20	**1.300** [33.02]	**.900** [22.86]	5103309-5	5103308-5
24	**1.500** [38.10]	**1.100** [27.94]	—	1-5103308-3
26	**1.600** [40.64]	**1.200** [30.48]	5103309-6	5103308-6
34	**2.000** [50.80]	**1.600** [40.64]	5103309-7	5103308-7
40	**2.300** [58.42]	**1.900** [48.26]	5103309-8	5103308-8
50	**2.800** [71.12]	**2.400** [60.96]	1-5103309-0	1-5103308-0
60	**3.300** [83.82]	**2.900** [73.66]	—	1-5103308-2

Note: All part numbers are RoHS compliant.

Dimensions are shown for reference purposes only. Specifications subject to change.

Dimensions are in inches and millimeters unless otherwise specified.
USA: +1 (800) 522-6752

Canada: +1 (905) 475-6222
Mexico/C. Am.: +52 (0) 55-1106-0800
Latin/S. Am.: +54 (0) 11-4733-2200
Germany: +49 (0) 6251-133-1999

UK: +44 (0) 800-267666
France: +33 (0) 1-3420-8686
Netherlands: +31 (0) 73-6246-999
China: +86 (0) 400-820-6015

Low Profile Pin Headers, Center and Dual Polarized, .100 x .100 [2.54 x 2.54] Centerlines (Continued)

Right-Angle PCB Mount .025 [0.64] Square Post (Mating End)

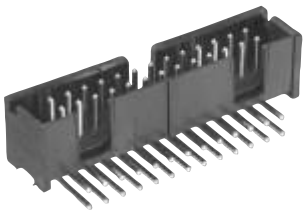

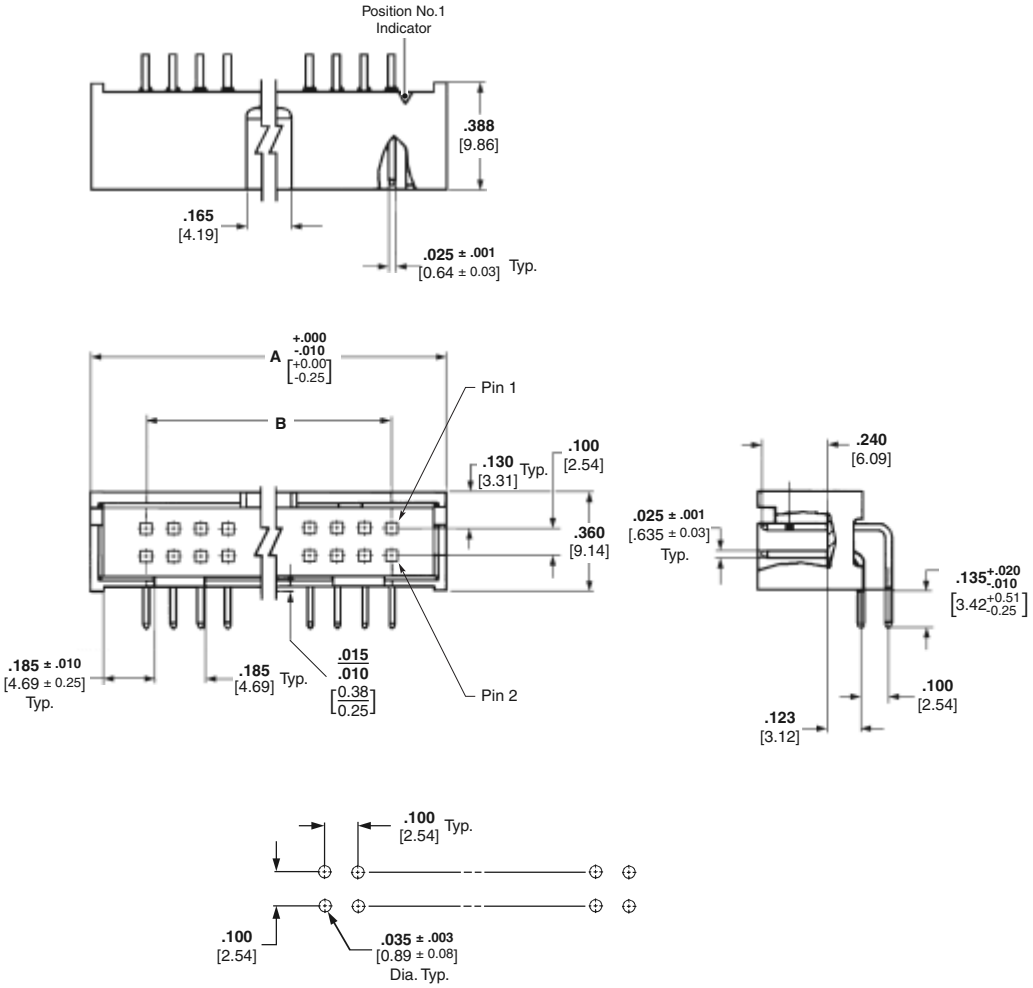

Recommended PC Board Hole Layout For Manual Insertion

Material and Finish

Housing — Glass-filled nylon, UL 94V-0 rated, black

Posts — Brass, plated as follows:

Plating A — Duplex plated, gold flash over palladium-nickel, .000030 [0.00076] min. total on mating surfaces, .000100 [0.00254] min. tin on solder area, with entire post underplated .000050 [0.00127] min. nickel **or** .000030 [0.00076] min. gold on mating surfaces, .000100 [0.00254] min. tin on solder area, with entire post underplated .000050 [0.00127] min. nickel

Plating B — Duplex plated, gold flash over palladium-nickel, .000015 [0.00038] min. total on mating surfaces, .000100 [0.00254] min. tin on solder area, with entire post underplated .000050 [0.00127] min. nickel **or** .000015 [0.00038] min. gold on mating surfaces, .000100 [0.00254] min. tin on solder area, with entire post underplated .000050 [0.00127] min. nickel

Related Product Data

Electrical Characteristics — page 75

Mateable Connectors —

AMPMODU Wire-Applied Receptacles

Short Point Wire-Applied Connectors

Novo Receptacles and Female Socket Connectors, 609, 622 and 636 Series — pages 48-55

No. of Pos.	Dimensions		Post Plating/Part Nos.	
	A	B	Plating A	Plating B
10	**.800** [20.32]	**.400** [10.16]	5103311-1	5103310-1
14	**1.000** [25.40]	**.600** [15.24]	5103311-2	5103310-2
16	**1.100** [27.94]	**.700** [17.78]	5103311-3	5103310-3
20	**1.300** [33.02]	**.900** [22.86]	5103311-5	5103310-5
26	**1.600** [40.64]	**1.200** [30.48]	5103311-6	5103310-6
34	**2.000** [50.80]	**1.600** [40.64]	5103311-7	5103310-7
40	**2.300** [58.42]	**1.900** [48.26]	5103311-8	5103310-8
50	**2.800** [71.12]	**2.400** [60.96]	1-5103311-0	1-5103310-0
60	**3.300** [83.82]	**2.900** [73.66]	1-5103311-2	—

Note: All part numbers are RoHS compliant.

Low Profile Pin Headers, Center and Dual Polarized, .100 x .100 [2.54 x 2.54] Centerlines & "Kinked" Solder Tails for PCB Retention

Vertical PCB Mount .025 [0.64] Square Post (Mating End) with Board Retention Feature

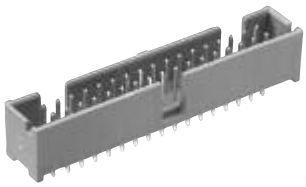

Material and Finish

Housing — Glass-filled PPA, UL 94V-0 rated, black

Posts — Brass, plated as follows:

Plating — Duplex plated, gold flash over palladium-nickel, .000015 [0.00038] min. total on mating surfaces, .000100 [0.00254] min. tin on solder area, with entire post underplated .000050 [0.00127] min. nickel **or** .000015 [0.00038] min. gold on mating surfaces, .000100 [0.00254] min. tin on solder area, with entire post underplated .000050 [0.00127] min. nickel

Related Product Data

Electrical Characteristics — page 75

Mateable Connectors —
AMPMODU Wire-Applied Receptacles
AMPMODU Board Mount Receptacles
Short Point Wire-Applied Connectors
Novo Receptacles and Female Socket Connectors, 609, 622 and 636 Series — pages 48-55

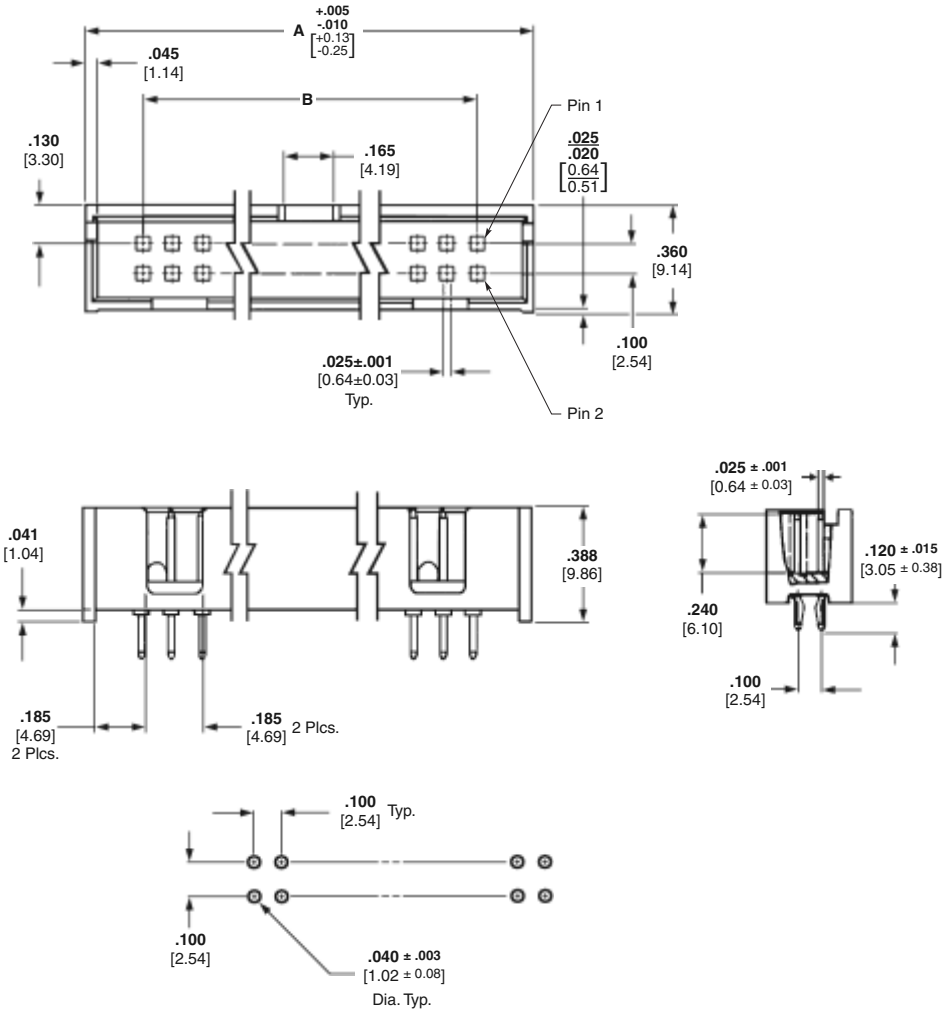

Recommended PC Board Hole Layout For Manual Insertion

No. of Pos.	Dimensions A	Dimensions B	Post Plating Part Nos.
10	**.800** [20.32]	**.400** [10.16]	5104338-1
14	**1.000** [25.40]	**.600** [15.24]	5104338-2
16	**1.100** [27.94]	**.700** [17.78]	5104338-3
20	**1.300** [33.02]	**.900** [22.86]	5104338-4
24	**1.500** [38.10]	**1.100** [27.94]	5104338-5
26	**1.600** [40.64]	**1.200** [30.48]	5104338-6
34	**2.000** [50.80]	**1.600** [40.64]	5104338-7
40	**2.300** [58.42]	**1.900** [48.26]	5104338-8
50	**2.800** [71.12]	**2.400** [60.96]	5104338-9
60	**3.300** [83.82]	**2.900** [73.66]	1-5104338-0

Note: All part numbers are RoHS compliant.

Dimensions are shown for reference purposes only. Specifications subject to change.

Dimensions are in inches and millimeters unless otherwise specified.
USA: +1 (800) 522-6752

Canada: +1 (905) 475-6222
Mexico/C. Am.: +52 (0) 55-1106-0800
Latin/S. Am.: +54 (0) 11-4733-2200
Germany: +49 (0) 6251-133-1999

UK: +44 (0) 800-267666
France: +33 (0) 1-3420-8686
Netherlands: +31 (0) 73-6246-999
China: +86 (0) 400-820-6015

Low Profile Pin Headers, Center and Dual Polarized, .100 x .100 [2.54 x 2.54] Centerlines & "Kinked" Solder Tails for PCB Retention (Continued)

Right-Angle PCB Mount .025 [0.64] Square Post (Mating End) with Board Retention Feature

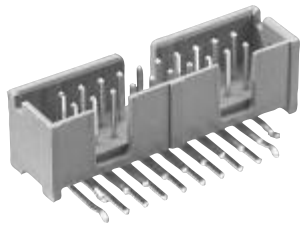

Material and Finish

Housing — Glass-filled PPA, UL 94V-0 rated, black

Posts — Brass, plated as follows:

Plating — Duplex plated, gold flash over palladium-nickel, .000015 [0.00038] min. total on mating surfaces, .000100 [0.00254] min. tin on solder area, with entire post underplated .000050 [0.00127] min. nickel **or** .000015 [0.00038] min. gold on mating surfaces, .000100 [0.00254] min. tin on solder area, with entire post underplated .000050 [0.00127] min. nickel

Related Product Data

Electrical Characteristics — page 75

Mateable Connectors —

AMPMODU Wire-Applied Receptacles

Short Point Wire-Applied Connectors

Novo Receptacles and Female Socket Connectors, 609, 622 and 636 Series — pages 48-55

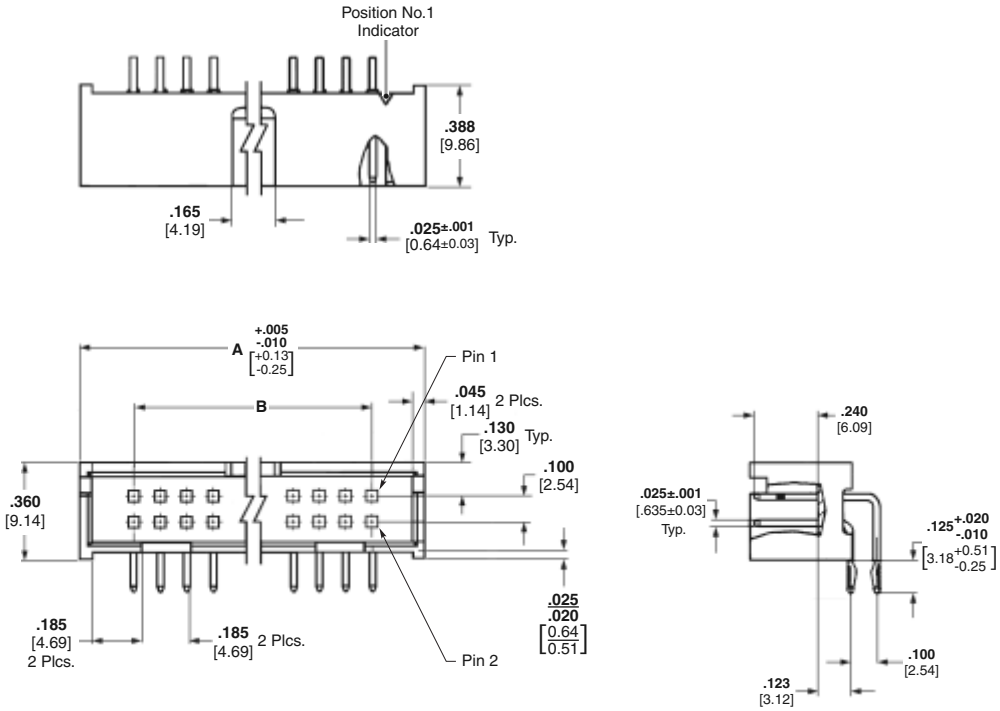

Recommended PC Board Hole Layout For Manual Insertion

No. of Pos.	Dimensions A	Dimensions B	Post Plating Part Nos.
10	**.800** [20.32]	**.400** [10.16]	5104340-1
14	**1.000** [25.40]	**.600** [15.24]	5104340-2
16	**1.100** [27.94]	**.700** [17.78]	5104340-3
20	**1.300** [33.02]	**.900** [22.86]	5104340-4
24	**1.500** [38.10]	**1.100** [27.94]	5104340-5
34	**2.000** [50.80]	**1.600** [40.64]	5104340-7
40	**2.300** [58.42]	**1.900** [48.26]	5104340-8
50	**2.800** [71.12]	**2.400** [60.96]	5104340-9

Note: All part numbers are RoHS compliant.

Dimensions are shown for reference purposes only. Specifications subject to change.

Dimensions are in inches and millimeters unless otherwise specified.
USA: +1 (800) 522-6752

Canada: +1 (905) 475-6222
Mexico/C. Am.: +52 (0) 55-1106-0800
Latin/S. Am.: +54 (0) 11-4733-2200
Germany: +49 (0) 6251-133-1999

UK: +44 (0) 800-267666
France: +33 (0) 1-3420-8686
Netherlands: +31 (0) 73-6246-999
China: +86 (0) 400-820-6015

IDC Low Profile Ejection Style Pin Headers with Die Cast Ejection Latches, Military and Center Polarized, .100 x .100 [2.54 x 2.54] Centerlines

Vertical PCB Mount .025 [0.64] Square Post (Mating End)

Material and Finish

Housing — Glass-filled PBT, UL 94V-0 rated, black

Posts — Brass or phosphor bronze, plated as follows:

Plating — Duplex plated, gold flash over palladium-nickel, .000030 [0.00076] min. total on mating surfaces, .000100 [0.00254] min. tin on solder area, with entire post underplated .000050 [0.00127] min. nickel **or** .000030 [0.00076] min. gold on mating surfaces, .000100 [0.00254] min. tin on solder area, with entire post underplated .000050 [0.00127] min. nickel

Related Product Data

Electrical Characteristics — page 75

Mateable Connectors —

Novo Receptacles and Female Socket Connectors, 609, 622 and 636 Series — pages 48-55

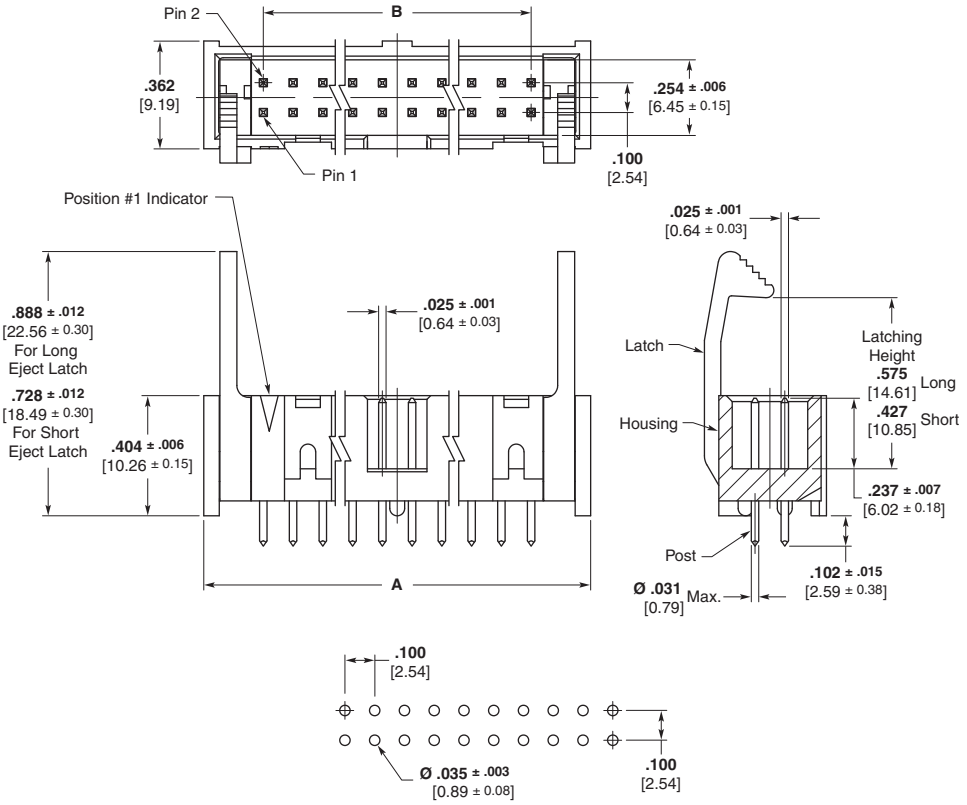

Recommended PC Board Layout

No. of Pos.	Dimensions A	Dimensions B	Part Numbers: Pin Header with Short Latches (Mates with Receptacles without Strain Relief)	Part Numbers: Pin Header with Long Latches (Mates with Receptacles with Strain Relief)
10	**.800** 20.32	**.400** 10.16	1761608-3	1761606-3
14	**1.000** 25.40	**.600** 15.24	1761608-5	1761606-5
16	**1.100** 27.94	**.700** 17.78	1761608-6	1761606-6
20	**1.300** 33.02	**.900** 22.86	1761608-7	1761606-7
24	**1.500** 38.10	**1.100** 27.94	1761608-8	1761606-8
26	**1.600** 40.64	**1.200** 30.48	1761608-9	1761606-9
30	**1.800** 45.72	**1.400** 35.56	—	1-1761606-0
34	**2.000** 50.80	**1.600** 40.64	1-1761608-1	1-1761606-1
40	**2.300** 58.42	**1.900** 48.26	1-1761608-3	1-1761606-3
50	**2.800** 71.12	**2.400** 60.96	1-1761608-5	1-1761606-5
60	**3.300** 83.82	**2.900** 73.66	1-1761608-6	1-1761606-6

Note: All part numbers are RoHS compliant.

Dimensions are shown for reference purposes only. Specifications subject to change.

Dimensions are in inches and millimeters unless otherwise specified.
USA: +1 (800) 522-6752

Canada: +1 (905) 475-6222
Mexico/C. Am.: +52 (0) 55-1106-0800
Latin/S. Am.: +54 (0) 11-4733-2200
Germany: +49 (0) 6251-133-1999
UK: +44 (0) 800-267666
France: +33 (0) 1-3420-8686
Netherlands: +31 (0) 73-6246-999
China: +86 (0) 400-820-6015

IDC Low Profile Ejection Style Pin Headers with Die Cast Ejection Latches, Military and Center Polarized, .100 x .100 [2.54 x 2.54] Centerlines (Continued)

Right-Angle PCB Mount .025 [0.64] Square Post (Mating End)

Material and Finish

Housing — Glass-filled PBT, UL 94V-0 rated, black

Posts — Brass or phosphor bronze, plated as follows:

Plating — Duplex plated, gold flash over palladium-nickel, .000030 [0.00076] min. total on mating surfaces, .000100 [0.00254] min. tin on solder area, with entire post underplated .000050 [0.00127] min. nickel **or** .000030 [0.00076] min. gold on mating surfaces, .000100 [0.00254] min. tin on solder area, with entire post underplated .000050 [0.00127] min. nickel

Related Product Data

Electrical Characteristics — page 75

Mateable Connectors —

Novo Receptacles and Female Socket Connectors, 609, 622 and 636 Series — pages 48-55

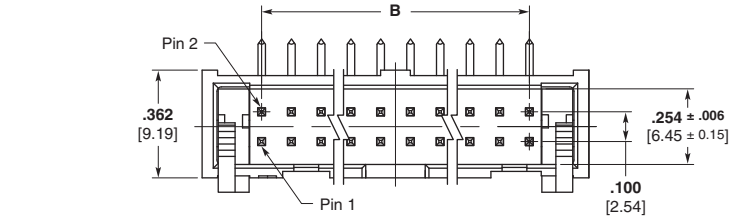

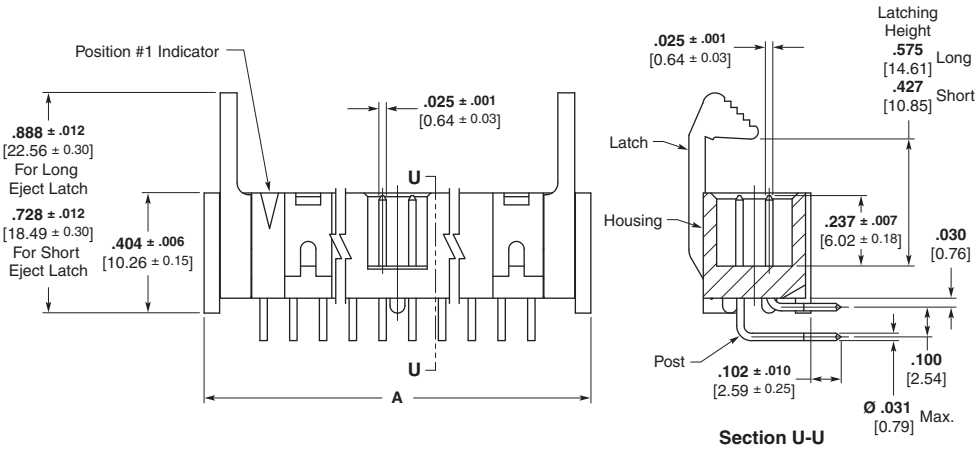

Section U-U

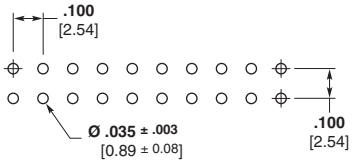

Recommended PC Board Layout

No. of Pos.	Dimensions A	Dimensions B	Part Numbers: Pin Header with Short Latches (Mates with Receptacles without Strain Relief)	Part Numbers: Pin Header with Long Latches (Mates with Receptacles with Strain Relief)
10	**.800** 20.32	**.400** 10.16	1761609-3	1761607-3
14	**1.000** 25.40	**.600** 15.24	1761609-5	1761607-5
16	**1.100** 27.94	**.700** 17.78	1761609-6	1761607-6
20	**1.300** 33.02	**.900** 22.86	1761609-7	1761607-7
26	**1.600** 40.64	**1.200** 30.48	1761609-9	1761607-9
34	**2.000** 50.80	**1.600** 40.64	1-1761609-1	1-1761607-1
40	**2.300** 58.42	**1.900** 48.26	1-1761609-3	1-1761607-3
50	**2.800** 71.12	**2.400** 60.96	1-1761609-5	1-1761607-5
60	**3.300** 83.82	**2.900** 73.66	1-1761609-6	1-1761607-6

Note: All part numbers are RoHS compliant.

Dimensions are shown for reference purposes only. Specifications subject to change.

Dimensions are in inches and millimeters unless otherwise specified.
USA: +1 (800) 522-6752

Canada: +1 (905) 475-6222
Mexico/C. Am.: +52 (0) 55-1106-0800
Latin/S. Am.: +54 (0) 11-4733-2200
Germany: +49 (0) 6251-133-1999

UK: +44 (0) 800-267666
France: +33 (0) 1-3420-8686
Netherlands: +31 (0) 73-6246-999
China: +86 (0) 400-820-6015

IDC Low Profile Ejection Style Pin Headers, Center Polarized, .100 x .100 [2.54 x 2.54] Centerlines

Vertical PCB Mount .025 [0.64] Square Post (Mating End)

Material and Finish

Housing and Eject Latches — PBT, UL 94V-0 rated, blue

Posts — Phosphor bronze, plated as follows:

Plating — Duplex plated, .000030 [0.00076] min. gold on mating surfaces, .000100 [0.00254] min. tin on solder area, with entire post underplated .000050 [0.00127] min. nickel

Related Product Data

Electrical Characteristics — page 75

Mateable Connectors —

Novo Receptacles and Female Socket Connectors, 609, 622 and 636 Series — pages 48-55

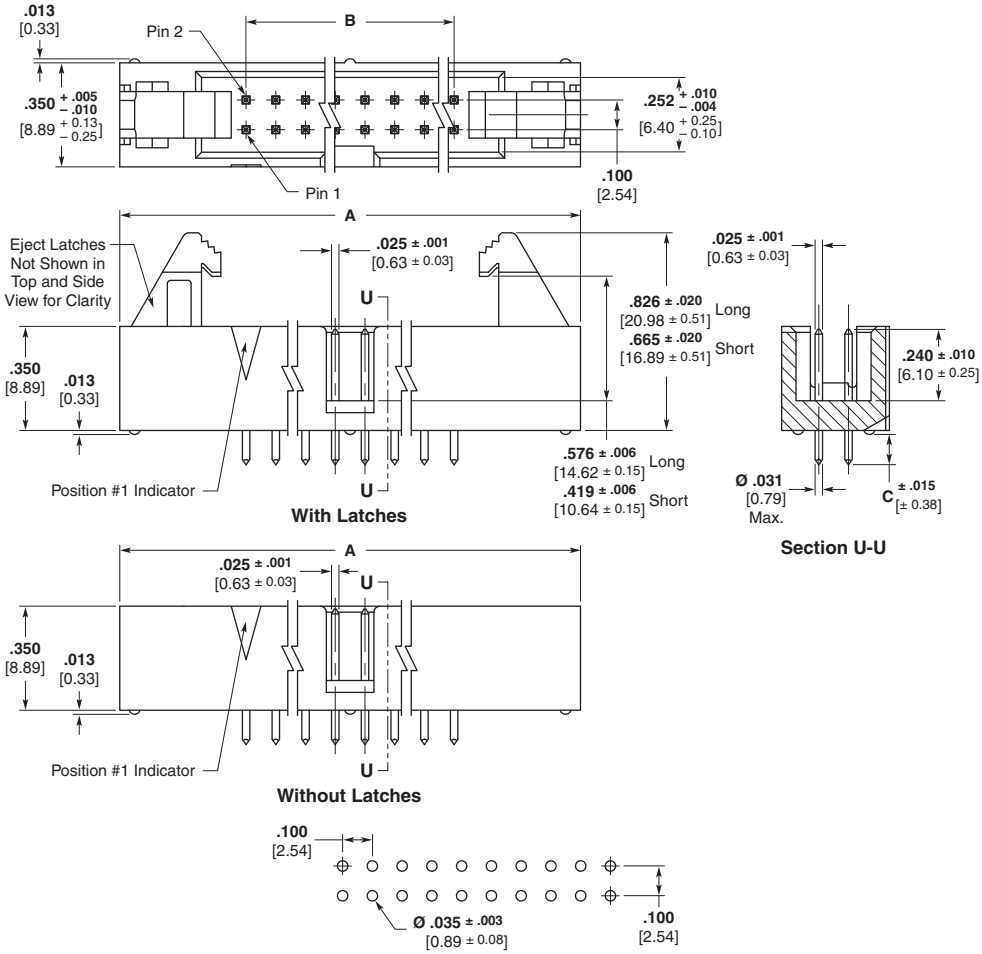

Dim. C (Soldertail Length)	No. of Pos.	Dimensions A	Dimensions B	Part Numbers: Pin Header without Latches	Part Numbers: Pin Header with Short Latches (Mates with Receptacles without Strain Relief)	Part Numbers: Pin Header with Long Latches (Mates with Receptacles with Strain Relief)
.102 2.59	10	**1.250** [31.75]	**.400** [10.16]	1761693-3	1761685-3	1761686-3
	14	**1.450** [36.83]	**.600** [15.24]	—	—	1761686-5
	16	**1.550** [39.37]	**.700** [17.78]	—	1761685-6	1761686-6
	20	**1.750** [44.45]	**.900** [22.86]	—	1761685-7	1761686-7
	24	**1.950**[49.53]	**1.100** [27.94]	1761693-8	1761685-8	1761686-8
	26	**2.050** [52.07]	**1.200** [30.48]	—	1761685-9	1761686-9
	30	**2.250** [57.15]	**1.400** [35.56]	—	1-1761685-0	—
	34	**2.450** [62.23]	**1.600** [40.64]	1-1761693-1	1-1761685-1	1-1761686-1
	40	**2.750** [69.85]	**1.900** [48.26]	—	1-1761685-3	1-1761686-3
	50	**3.250** [82.55]	**2.400** [60.96]	—	1-1761685-5	1-1761686-5
	60	**3.750** [95.25]	**2.900** [73.66]	1-1761693-6	1-1761685-6	—
.165 4.19	10	**1.250** [31.75]	**.400** [10.16]	1761694-3	1761687-3	—
	14	**1.450** [36.83]	**.600** [15.24]	—	—	—
	16	**1.550** [39.37]	**.700** [17.78]	—	—	—
	20	**1.750** [44.45]	**.900** [22.86]	—	1761687-7	1761688-7
	24	**1.950**[49.53]	**1.100** [27.94]	—	—	1761688-8
	26	**2.050** [52.07]	**1.200** [30.48]	1761694-9	1761687-9	1761688-9
	34	**2.450** [62.23]	**1.600** [40.64]	—	1-1761687-1	1-1761688-1
	40	**2.750** [69.85]	**1.900** [48.26]	—	1-1761687-3	—
	50	**3.250** [82.55]	**2.400** [60.96]	—	—	1-1761688-5

Note: All part numbers are RoHS compliant.

Dimensions are shown for reference purposes only. Specifications subject to change.

Dimensions are in inches and millimeters unless otherwise specified.
USA: +1 (800) 522-6752

Canada: +1 (905) 475-6222
Mexico/C. Am.: +52 (0) 55-1106-0800
Latin/S. Am.: +54 (0) 11-4733-2200
Germany: +49 (0) 6251-133-1999

UK: +44 (0) 800-267666
France: +33 (0) 1-3420-8686
Netherlands: +31 (0) 73-6246-999
China: +86 (0) 400-820-6015

IDC Low Profile Ejection Style Pin Headers, Center Polarized, .100 x .100 [2.54 x 2.54] Centerlines (Continued)

Right-Angle PCB Mount .025 [0.64] Square Post (Mating End)

Material and Finish

Housing and Eject Latches — PBT, UL 94V-0 rated, blue

Posts — Phosphor bronze, plated as follows:

Plating — Duplex plated, .000030 [0.00076] min. gold on mating surfaces, .000100 [0.00254] min. tin on solder area, with entire post underplated .000050 [0.00127] min. nickel

Related Product Data

Electrical Characteristics — page 75

Mateable Connectors —

Novo Receptacles and Female Socket Connectors, 609, 622 and 636 Series — pages 48-55

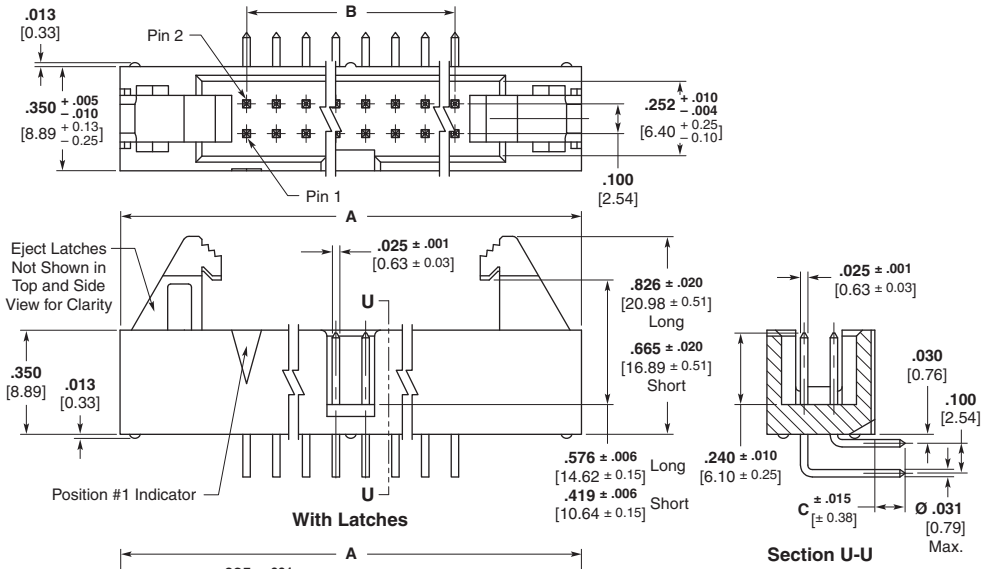

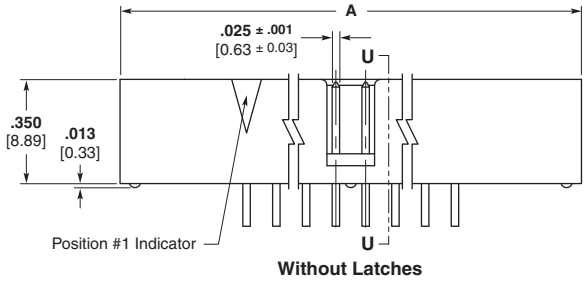

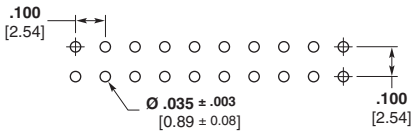

Recommended PC Board Layout

Dim. C (Soldertail Length)	No. of Pos.	Dimensions A	Dimensions B	Part Numbers: Pin Header with Long Latches (Mates with Receptacles with Strain Relief)
.102 2.59	16	**1.550** [39.37]	**.700** [17.78]	1761690-6
	24	**1.950**[49.53]	**1.100** [27.94]	1761690-8
	26	**2.050** [52.07]	**1.200** [30.48]	1761690-9
	30	**2.250** [57.15]	**1.400** [35.56]	1-1761690-0
	60	**3.750** [95.25]	**2.900** [73.66]	1-1761690-6
.165 4.19	10	**1.250** [31.75]	**.400** [10.16]	1761692-3
	34	**2.450** [62.23]	**1.600** [40.64]	1-1761692-1
	40	**2.750** [69.85]	**1.900** [48.26]	1-1761692-3

Note: All part numbers are RoHS compliant.

Dimensions are shown for reference purposes only. Specifications subject to change.

Dimensions are in inches and millimeters unless otherwise specified.
USA: +1 (800) 522-6752

Canada: +1 (905) 475-6222
Mexico/C. Am.: +52 (0) 55-1106-0800
Latin/S. Am.: +54 (0) 11-4733-2200
Germany: +49 (0) 6251-133-1999

UK: +44 (0) 800-267666
France: +33 (0) 1-3420-8686
Netherlands: +31 (0) 73-6246-999
China: +86 (0) 400-820-6015

Universal Ejection Style Pin Headers, Military, Center and Dual Polarized, .100 x .100 [2.54 x 2.54] Centerlines

Vertical PCB Mount .025 [0.64] Sq. Posts (Mating End)

Pin Header with Latches

Pin Header without Latches

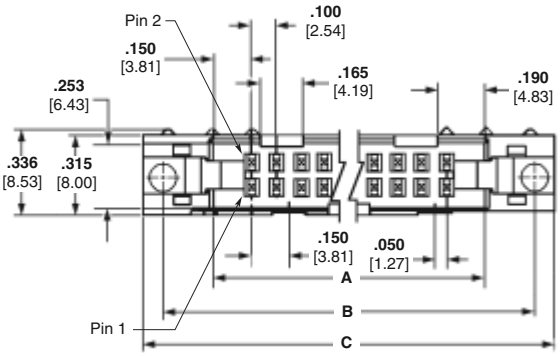

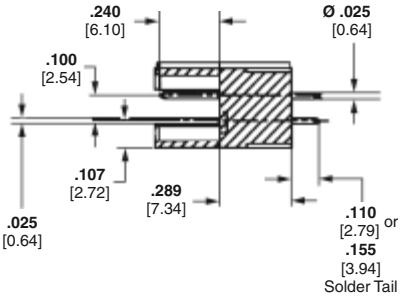

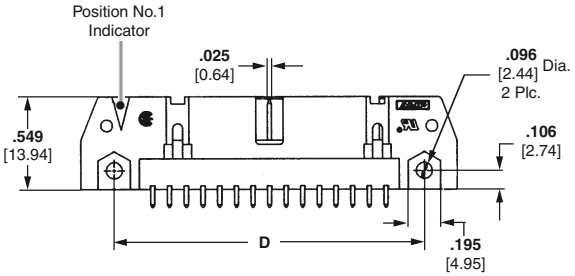

Material and Finish

Housing & Latches—Black PBT or nylon, UL 94V-0 rated

Contacts — Brass; duplex plated (See chart, page 85)

Related Product Data

Mateable Receptacles — pages 48-55

Accessories —
Snap-In Polarizer — page 63

Technical Documents

Product Specifications
108-40018 Pin Headers

No. of Positions	Dimensions					
	A	B	C	D	E	F
10	**.700** 17.78	**1.100** 27.94	**1.260** 32.00	**.860** 21.84	**1.100** 27.94	**.400** 10.16
14	**.900** 22.86	**1.300** 33.02	**1.460** 37.08	**1.060** 26.92	**1.300** 33.02	**.600** 15.24
16	**1.000** 25.40	**1.400** 35.56	**1.560** 39.62	**1.180** 29.46	**1.400** 35.56	**.700** 17.78
20	**1.200** 30.48	**1.600** 40.64	**1.760** 44.70	**1.360** 34.54	**1.800** 40.64	**.900** 22.86
24	**1.400** 35.56	**1.800** 45.72	**1.960** 49.78	**1.560** 39.62	**1.800** 45.72	**1.100** 27.94
26	**1.500** 38.10	**1.900** 48.26	**2.060** 52.32	**1.660** 42.16	**1.900** 48.26	**1.200** 30.48
30	**1.700** 43.18	**2.100** 53.34	**2.260** 57.40	**1.860** 47.24	**2.100** 53.34	**1.400** 35.56
34	**1.900** 48.26	**2.300** 58.42	**2.460** 62.48	**2.060** 52.32	**2.300** 58.42	**1.600** 40.64
40	**2.200** 55.88	**2.600** 66.04	**2.760** 70.10	**2.360** 59.94	**2.600** 66.04	**1.900** 48.26
50	**2.700** 68.58	**3.100** 78.74	**3.260** 82.80	**2.860** 72.64	**3.100** 78.74	**2.400** 60.98
60	**3.200** 81.28	**3.600** 91.44	**3.760** 95.50	**3.360** 85.34	**3.600** 91.44	**2.900** 73.66
64	**3.400** 86.36	**3.800** 96.52	**3.960** 100.58	**3.560** 90.42	**3.800** 96.52	**3.100** 78.74

Notes: 1. Pin headers in 10- and 14-position sizes have only one slot for snap-in polarizer (military polarization), located as shown.
2. Pin headers in 10-position size have only slot for dual polarization, located as shown.
3. For information regarding latch/pin header applications and for ordering latches separately, refer to page 96.

Dimensions are shown for reference purposes only. Specifications subject to change.

Dimensions are in inches and millimeters unless otherwise specified.
USA: +1 (800) 522-6752

Canada: +1 (905) 475-6222
Mexico/C. Am.: +52 (0) 55-1106-0800
Latin/S. Am.: +54 (0) 11-4733-2200
Germany: +49 (0) 6251-133-1999

UK: +44 (0) 800-267666
France: +33 (0) 1-3420-8686
Netherlands: +31 (0) 73-6246-999
China: +86 (0) 400-820-6015

Universal Ejection Style Pin Headers, Military, Center and Dual Polarized, .100 x .100 [2.54 x 2.54] Centerlines (Continued)

Vertical PCB Mount .025 [0.64] Sq. Posts (Mating End) (Continued)

Soldertail Length	No. of Positions	Contact Finish (Plating Code)	Pin Header without Latches	Pin Header w/ Short Latches (Mates with AMP-LATCH Receptacles without Strain Relief)	Pin Header w/ Long Latches (Mates with AMP-LATCH Receptacles with Strain Relief)
.110 2.79	10	A	5102153-1	5499910-1	5499922-1
		B	5102154-1	5499160-1	5499206-1
	14	A	5102153-2	5499910-2	5499922-2
		B	5102154-2	5499160-2	5499206-2
	16	A	5102153-3	5499910-3	5499922-3
		B	5102154-3	5499160-3	5499206-3
	20	A	5102153-4	5499910-4	5499922-4
		B	5102154-4	5499160-4	5499206-4
	24	A	5102153-5	5499910-5	5499922-5
		B	5102154-5	—	5499206-5
	26	A	5102153-6	5499910-6	5499922-6
		B	5102154-6	5499160-6	5499206-6
	30	A	5102153-7	5499910-7	5499922-7
		B	5102154-7	—	5499206-7
	34	A	5102153-8	5499910-8	5499922-8
		B	5102154-8	5499160-8	5499206-8
	40	A	5102153-9	5499910-9	5499922-9
		B	5102154-9	5499160-9	5499206-9
	50	A	1-5102153-0	1-5499910-0	1-5499922-0
		B	1-5102154-0	1-5499160-0	1-5499206-0
	60	A	—	—	1-5499922-1
		B	1-5102154-1	—	1-5499206-1
	64	A	1-5102153-2	—	1-5499922-2
		B	1-5102154-2	1-5499160-2	1-5499206-2
.155 3.94	10	A	5102155-1	—	5499923-1
		B	5102156-1	5499374-1	5102321-1
	14	A	—	—	—
		B	5102156-2	5499374-2	5102321-2
	16	A	5102155-3	—	5499923-3
		B	5102156-3	—	5102321-3
	20	A	—	—	5499923-4
		B	5102156-4	5499374-4	5102321-4
	24	A	—	—	5499923-5
		B	5102156-5	5499374-5	5102321-5
	26	A	5102155-6	—	5499923-6
		B	5102156-6	5499374-6	5102321-6
	30	A	—	—	5499923-7
		B	5102156-7	—	5102321-7
	34	A	5102155-8	5499911-8	5499923-8
		B	5102156-8	5499374-8	5102321-8
	40	A	5102155-9	5499911-9	5499923-9
		B	5102156-9	5499374-9	5102321-9
	50	A	1-5102155-0	—	1-5499923-0
		B	1-5102156-0	1-5499374-0	1-5102321-0
	60	A	—	—	1-5499923-1
		B	1-5102156-1	—	1-5102321-1
	64	A	1-5102155-2	—	1-5499923-2
		B	1-5102156-2	—	1-5102321-2

Plating Code A — Gold flash over palladium-nickel plate, .000015 [0.00038] min. total on the mating surfaces, .000100 [0.00254] min. tin plate on the soldertails, over .000050 [0.00127] min nickel underplate **or** .000015 [0.00038] min. gold on the mating surfaces, .000100 [0.00254] min. tin plate on the soldertails, over .000050 [0.00127] min. nickel underplate.
Plating Code B — Gold flash over palladium-nickel plate, .000030 [0.00076] min. total on the mating surfaces, .000100 [0.00254] min. tin plate on the soldertails, over .000050 [0.00127] min nickel underplate **or** .000030 [0.00076] min. gold on the mating surfaces, .000100 [0.00254] min. tin plate on the soldertails, over .000050 [0.00127] min. nickel underplate.

Note: All part numbers are RoHS compliant.

Dimensions are shown for reference purposes only. Specifications subject to change.

Dimensions are in inches and millimeters unless otherwise specified.
USA: +1 (800) 522-6752

Canada: +1 (905) 475-6222
Mexico/C. Am.: +52 (0) 55-1106-0800
Latin/S. Am.: +54 (0) 11-4733-2200
Germany: +49 (0) 6251-133-1999

UK: +44 (0) 800-267666
France: +33 (0) 1-3420-8686
Netherlands: +31 (0) 73-6246-999
China: +86 (0) 400-820-6015

Universal Ejection Style Pin Headers, Military, Center and Dual Polarized, .100 x .100 [2.54 x 2.54] Centerlines (Continued)

Mounting Information

4-24 self-tapping screws and 2-56 bolts and nuts are available for mounting straight-thru pin headers of pc boards. Typical applications and part nos. for ordering this hardware are presented below.

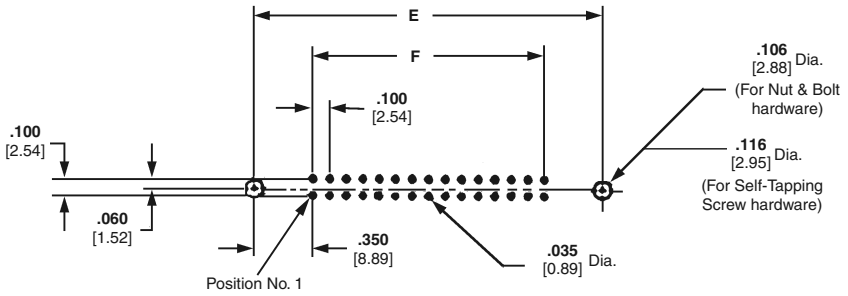

Recommended Mounting Hole Pattern For Vertical PCB Mount Headers

PC board thicknesses are : .062 [1.57] for .110 [2.79] long posts, .125 [3.18] for .155 [3.94] long posts.

Note: 2-56 bolts and nuts may be used to mount pin headers with and without latches. If latches are to be used, the bolts must be positioned in the pin header before the latches are installed.

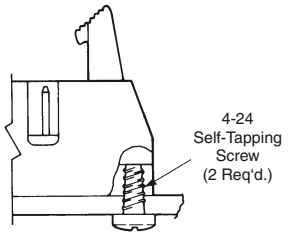

Pin Header Mounting using 4-24 Self-Tapping Screws:
Part No. 19156-1 (for .062 [1.57] Thick PC Board)
19156-2 (for .093 [2.36] Thick PC Board)
19156-3 (for .125 [3.18] Thick PC Board)

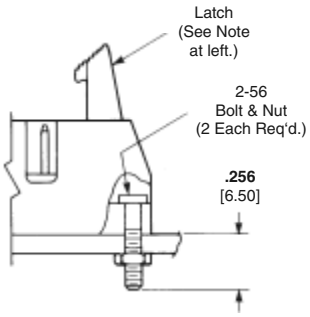

Pin Header Mounting with 2-56 Bolts and Nuts:
Part No. 746383-1 (Bolt Only)
Kit No. 102198-1 (Bolt and Nut, 2 Each per Kit)

Note: All part numbers are RoHS compliant.

Universal Ejection Style Pin Headers with ACTION PIN Contacts, Military, Center and Dual Polarized, .100 x .100 [2.54 x 2.54] Centerlines

Vertical PCB Mount .025 [0.64] Sq. Posts (Mating End)

Pin Header without Latches

Material and Finish

Housing — Black PBT or nylon, UL 94V-0 rated

Contacts—Copper alloy; duplex plated (See chart, page 88)

Related Product Data

Mateable Receptacles — pages 48-55

Accessories —
Snap-In Polarizer — page 63

Technical Documents

Product Specifications
108-40019 Pin Headers with ACTION PIN Contacts

Application Specification
114-40020 AMP-LATCH Universal Headers with ACTION PIN Contacts

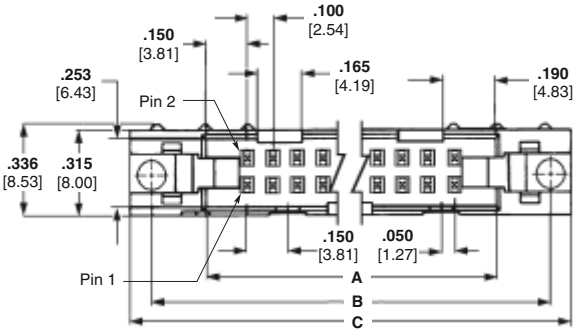

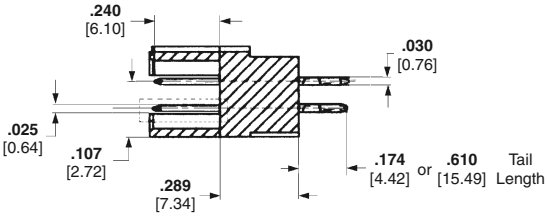

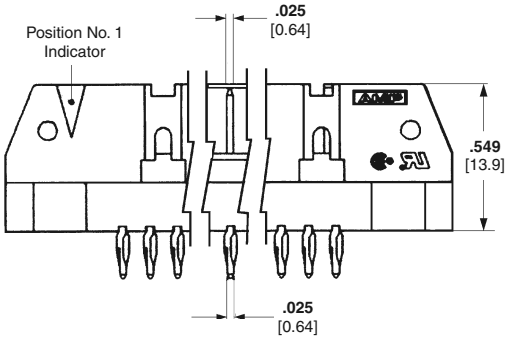

No. of Positions	Dimensions				
	A	B	C	D	E
10	**.700** 17.78	**1.100** 27.94	**1.260** 32.00	**1.100** 27.94	**.400** 10.16
14	**.900** 22.86	**1.300** 33.02	**1.460** 37.08	**1.300** 33.02	**.600** 15.24
16	**1.000** 25.40	**1.400** 35.56	**1.560** 39.62	**1.400** 35.56	**.700** 17.78
20	**1.200** 30.48	**1.600** 40.64	**1.760** 44.70	**1.600** 40.64	**.900** 22.86
24	**1.400** 35.56	**1.800** 45.72	**1.960** 49.78	**1.800** 45.72	**1.100** 27.94
26	**1.500** 38.10	**1.900** 48.26	**2.060** 52.32	**1.900** 48.26	**1.200** 30.48
30	**1.700** 43.18	**2.100** 53.34	**2.260** 57.40	**2.100** 53.34	**1.400** 35.56
34	**1.900** 48.26	**2.300** 58.42	**2.460** 62.48	**2.300** 58.42	**1.600** 40.64
40	**2.200** 55.88	**2.600** 66.04	**2.760** 70.10	**2.600** 66.04	**1.900** 48.26
50	**2.700** 68.58	**3.100** 78.74	**3.260** 82.80	**3.100** 78.74	**2.400** 60.96
60	**3.200** 81.28	**3.600** 91.44	**3.760** 95.50	**3.600** 91.44	**2.900** 73.66
64	**3.400** 86.36	**3.800** 96.52	**3.960** 100.58	**3.800** 96.52	**3.100** 78.74

Notes: 1. Pin headers in 10- and 14-position sizes have only one slot for snap-in polarizer (military polarization), located as shown.
2. Pin headers in 10-position size have only slot for dual polarization, located as shown.
3. For information regarding latch/pin header applications and for ordering latches separately, refer to page 96.

Dimensions are shown for reference purposes only. Specifications subject to change.

Dimensions are in inches and millimeters unless otherwise specified.
USA: +1 (800) 522-6752

Canada: +1 (905) 475-6222
Mexico/C. Am.: +52 (0) 55-1106-0800
Latin/S. Am.: +54 (0) 11-4733-2200
Germany: +49 (0) 6251-133-1999

UK: +44 (0) 800-267666
France: +33 (0) 1-3420-8686
Netherlands: +31 (0) 73-6246-999
China: +86 (0) 400-820-6015

Universal Ejection Style Pin Headers with ACTION PIN Contacts, Military, Center and Dual Polarized, .100 x .100 [2.54 x 2.54] Centerlines (Continued)

Tail Length	No. of Positions	Contact Finish (Plating Code)	Pin Header (without Latches)
.174 [4.42]	10	B	1658694-6
	14		1658694-7
	16		1658694-8
	20		1658694-1
	24		1658694-9
	26		1658694-2
	30		1-1658694-0
	34		1-1658694-1
	40		1658694-3
	50		1658694-4
	64		1658694-5
.610 [15.49]	10	B	1658695-2
	14		1658695-3
	16		1658695-4
	20		1658695-5
	26		1658695-6
	34		1658695-1
	40		1658695-7
	50		1658695-8
	60		1658695-9

Plating Code B — Gold flash over palladium-nickel plate, .000030 [0.00076] min. total on the mating surfaces, .000100 [0.00254] min. tin plate on the tails, over .000050 [0.00127] min nickel underplate **or** .000030 [0.00076] min. gold on the mating surfaces, .000100 [0.00254] min. tin plate on the tails, over .000050 [0.00127] min. nickel underplate.

Mounting Information

4-24 self-tapping screws and 2-56 bolts and nuts are available for mounting straight-thru pin headers of pc boards. Typical applications and part nos. for ordering this hardware are presented on page 86.

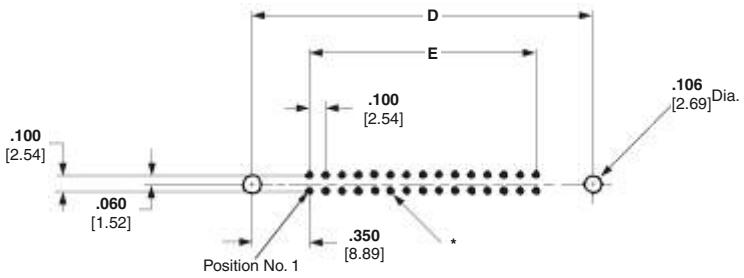

Recommended Mounting Hole Pattern For Vertical PCB Mount Header With ACTION PIN Contacts

*For .080 [2.03] min. thick PCB refer to Application Specification 114-40020 for hole size and finish recommendations.

Note: All part numbers are RoHS compliant.

Universal Ejection Style Pin Headers, Military, Center and Dual Polarized, .100 x .100 [2.54 x 2.54] Centerlines

Right-Angle PCB Mount .025 [0.64] Sq. Posts (Mating End)

Pin Header with Latches

Pin Header without Latches

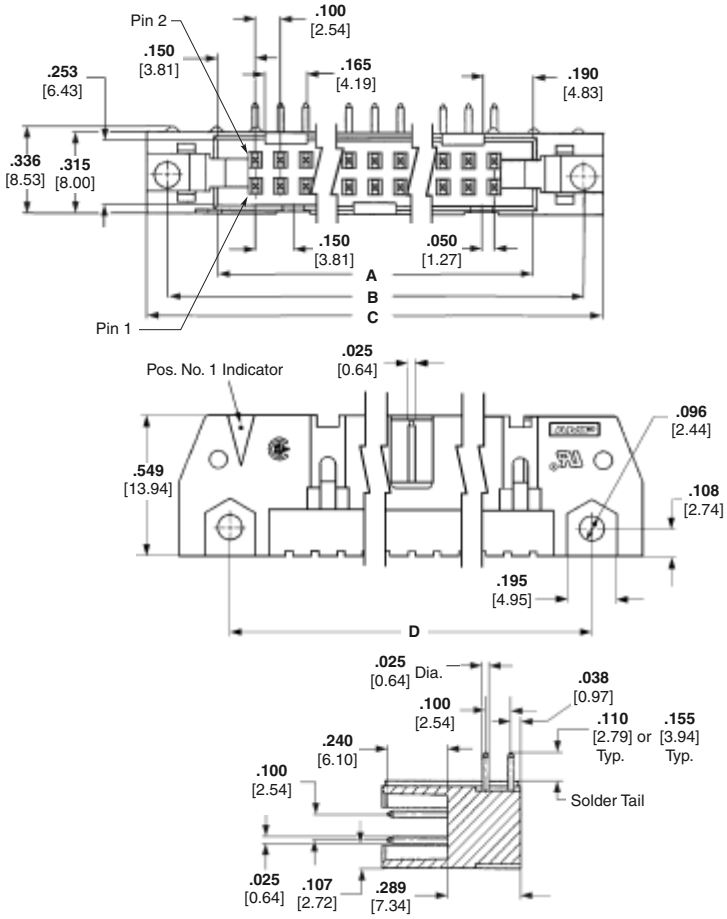

No. of Positions	Dimensions					
	A	B	C	D	E	F
10	**.700** 17.78	**1.100** 27.94	**1.260** 32.00	**.860** 21.84	**.860** 21.84	**.400** 10.16
14	**.900** 22.86	**1.300** 33.02	**1.460** 37.08	**1.060** 26.92	**1.060** 26.92	**.600** 15.24
16	**1.000** 25.40	**1.400** 35.56	**1.560** 39.62	**1.180** 29.46	**1.180** 29.46	**.700** 17.78
20	**1.200** 30.48	**1.600** 40.64	**1.760** 44.70	**1.380** 34.54	**1.380** 34.54	**.900** 22.86
24	**1.400** 35.56	**1.800** 45.72	**1.960** 49.78	**1.560** 39.62	**1.560** 39.62	**1.100** 27.94
26	**1.500** 38.10	**1.900** 48.26	**2.060** 52.32	**1.660** 42.16	**1.660** 42.16	**1.200** 30.48
30	**1.700** 43.18	**2.100** 53.34	**2.260** 57.40	**1.860** 47.24	**1.860** 47.24	**1.400** 35.56
34	**1.900** 48.26	**2.300** 58.42	**2.460** 62.48	**2.060** 52.32	**2.060** 52.32	**1.600** 40.64
40	**2.200** 55.88	**2.600** 66.04	**2.760** 70.10	**2.360** 59.94	**2.360** 59.94	**1.900** 48.26
50	**2.700** 68.58	**3.100** 78.74	**3.260** 82.80	**2.860** 72.64	**2.860** 72.64	**2.400** 60.98
60	**3.200** 81.28	**3.600** 91.44	**3.760** 95.50	**3.360** 85.34	**3.360** 85.34	**2.900** 73.66
64	**3.400** 86.36	**3.800** 96.52	**3.960** 100.58	**3.560** 90.42	**3.560** 90.42	**3.100** 78.74

Notes: 1. Pin headers in 10- and 14-position sizes have only one slot for snap-in polarizer (military polarization), located as shown.
2. Pin headers in 10-position size have only slot for dual polarization, located as shown.

Material and Finish

Housing & Latches — Black PBT or nylon, UL 94V-0 rated

Contacts — Brass; duplex plated (See chart, page 90)

Related Product Data

Mateable Receptacles — pages 48-55

Accessories —
Snap-In Polarizer — page 63

Technical Documents

Product Specifications
108-40018 Pin Headers

Dimensions are shown for reference purposes only. Specifications subject to change.

Dimensions are in inches and millimeters unless otherwise specified.
USA: +1 (800) 522-6752

Canada: +1 (905) 475-6222
Mexico/C. Am.: +52 (0) 55-1106-0800
Latin/S. Am.: +54 (0) 11-4733-2200
Germany: +49 (0) 6251-133-1999

UK: +44 (0) 800-267666
France: +33 (0) 1-3420-8686
Netherlands: +31 (0) 73-6246-999
China: +86 (0) 400-820-6015

Universal Ejection Style Pin Headers, Military, Center and Dual Polarized, .100 x .100 [2.54 x 2.54] Centerlines (Continued)

Right-Angle PCB Mount .025 [0.64] Sq. Posts (Mating End) (Continued)

Soldertail Length	No. of Positions	Contact Finish (Plating Code)	Pin Header without Latches	Pin Header w/ Short Latches (Mates with Receptacles without Strain Relief)	Pin Header w/ Long Latches (Mates with Receptacles with Strain Relief)
.110 2.79	10	A	5102159-1	5499913-1	5499786-1
		B	5102160-1	5499345-1	5499141-1
	14	A	5102159-2	5499913-2	5499786-2
		B	—	5499345-2	5499141-2
	16	A	5102159-3	5499913-3	—
		B	5102160-3	—	5499141-3
	20	A	5102159-4	5499913-4	5499786-4
		B	5102160-4	—	5499141-4
	24	A	—	5499913-5	5499786-5
		B	5102160-5	5499345-5	—
	26	A	5102159-6	5499913-6	5499786-6
		B	5102160-6	—	5499141-6
	30	A	5102159-7	5499913-7	—
		B	—	—	5499141-7
	34	A	5102159-8	5499913-8	5499786-8
		B	5102160-8	—	5499141-8
	40	A	5102159-9	5499913-9	5499786-9
		B	5102160-9	5499345-9	5499141-9
	50	A	1-5102159-0	1-5499913-0	1-5499786-0
		B	1-5102160-0	1-5499345-0	1-5499141-0
	60	A	1-5102159-1	1-5499913-1	1-5499786-1
		B	1-5102160-1	—	1-5499141-1
	64	A	1-5102159-2	—	1-5499786-2
		B	1-5102160-2	—	1-5499141-2
.155 3.94	10	A	—	—	—
		B	5102162-1	—	5102322-1
	14	A	5102161-2	—	5499925-2
		B	5102162-2	—	5102322-2
	16	A	—	—	—
		B	—	—	5102322-3
	20	A	5102161-4	5499914-4	—
		B	—	—	5102322-4
	24	A	5102161-5	—	5499925-5
		B	5102162-5	—	5102322-5
	26	A	—	—	—
		B	—	—	5102322-6
	30	A	5102161-7	—	—
		B	5102162-7	—	—
	34	A	5102161-8	5499914-8	—
		B	5102162-8	—	5102322-8
	40	A	—	—	—
		B	—	5499376-9	—
	50	A	—	—	1-5499925-0
		B	1-5102162-0	—	—
	60	A	—	—	—
		B	1-5102162-1	—	—
	64	A	—	—	—
		B	1-5102162-2	—	—

Plating Code A — Gold flash over palladium-nickel plate, .000015 [0.00038] min. total on the mating surfaces, .000100 [0.00254] min. tin plate on the soldertails, over .000050 [0.00127] min nickel underplate **or** .000015 [0.00038] min. gold on the mating surfaces, .000100 [0.00254] min. tin plate on the soldertails, over .000050 [0.00127] min. nickel underplate.

Plating Code B — Gold flash over palladium-nickel plate, .000030 [0.00076] min. total on the mating surfaces, .000100 [0.00254] min. tin plate on the soldertails, over .000050 [0.00127] min nickel underplate **or** .000030 [0.00076] min. gold on the mating surfaces, .000100 [0.00254] min. tin plate on the soldertails, over .000050 [0.00127] min. nickel underplate.

Note: All part numbers are RoHS compliant.

Dimensions are shown for reference purposes only. Specifications subject to change.

Dimensions are in inches and millimeters unless otherwise specified.
USA: +1 (800) 522-6752

Canada: +1 (905) 475-6222
Mexico/C. Am.: +52 (0) 55-1106-0800
Latin/S. Am.: +54 (0) 11-4733-2200
Germany: +49 (0) 6251-133-1999

UK: +44 (0) 800-267666
France: +33 (0) 1-3420-8686
Netherlands: +31 (0) 73-6246-999
China: +86 (0) 400-820-6015

Universal Ejection Style Pin Headers, Military, Center and Dual Polarized, .100 x .100 [2.54 x 2.54] Centerlines (Continued)

Mounting Information

No mounting hardware is supplied by TE.

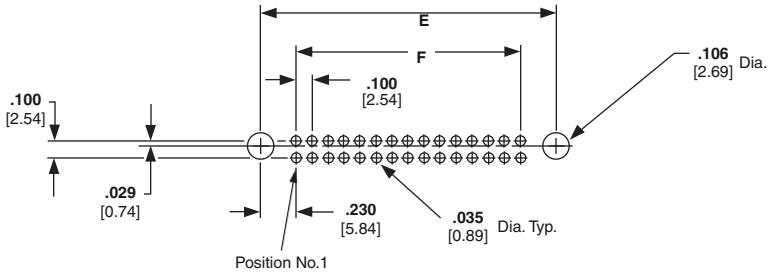

Recommended Mounting Hole Pattern For Right-Angle PCB Mount Headers

PC board thicknesses are : .062 [1.57] for .110 [2.79] long posts, .125 [3.18] for .155 [3.94] long posts.

Dimensions are shown for reference purposes only. Specifications subject to change.

Dimensions are in inches and millimeters unless otherwise specified.
USA: +1 (800) 522-6752

Canada: +1 (905) 475-6222
Mexico/C. Am.: +52 (0) 55-1106-0800
Latin/S. Am.: +54 (0) 11-4733-2200
Germany: +49 (0) 6251-133-1999

UK: +44 (0) 800-267666
France: +33 (0) 1-3420-8686
Netherlands: +31 (0) 73-6246-999
China: +86 (0) 400-820-6015

Universal Ejection Style Pinless Headers, Military, Center and Dual Polarized, .100 x .100 [2.54 x 2.54] Centerlines

Vertical PCB Mount .025 [0.64] Sq. Posts (without latches)

Pinless Header

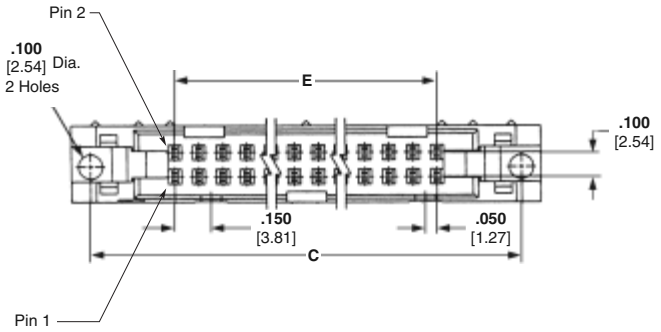

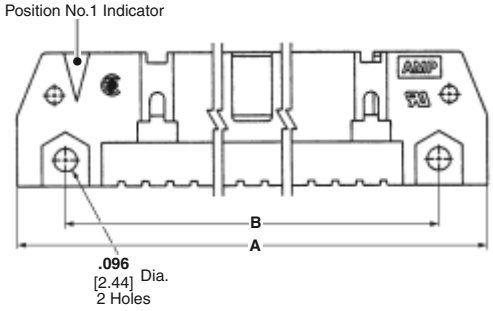

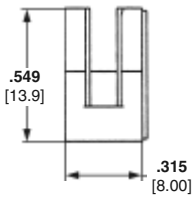

Material and Finish

Housing — Black PBT or nylon, UL 94V-0 rated

Related Product Data

Mateable Receptacles — pages 48-55

Accessories —
Snap-In Polarizer — page 63

Technical Documents

Product Specifications
108-40018 Pin Headers

No. of Pos.	Dimensions				Pinless Header Part Nos.	
	A	B	C	E	Press-Fit	Clearance-Fit
10	**1.260** 32.00	**.860** 21.84	**1.100** 27.94	**.400** 10.16	499726-1	102142-6
14	**1.460** 37.08	**1.060** 26.92	**1.300** 33.02	**.600** 15.24	—	102142-8
16	**1.560** 39.62	**1.160** 29.46	**1.400** 35.56	**.700** 17.78	—	102142-9
20	**1.760** 44.70	**1.360** 34.54	**1.600** 40.64	**.900** 22.86	—	102142-1
24	**1.960** 49.78	**1.560** 39.62	**1.800** 45.72	**1.100** 27.94	—	1-102142-0
26	**2.060** 52.32	**1.660** 42.16	**1.900** 48.26	**1.200** 30.48	—	102142-2
34	**2.460** 62.48	**2.060** 52.32	**2.300** 58.42	**1.600** 40.64	499726-8	102142-3
40	**2.760** 70.10	**2.360** 59.94	**2.600** 66.04	**1.900** 48.26	499726-9	102142-4
50	**3.260** 82.80	**2.860** 72.64	**3.100** 78.74	**2.400** 60.96	1-499726-0	102142-5
60	**3.760** 95.50	**3.360** 85.34	**3.600** 91.44	**2.900** 73.66	1-499726-1	102142-7
64	**3.960** 100.58	**3.560** 90.42	**3.800** 96.52	**3.100** 78.74	1-499726-2	1-102142-3

Notes: 1. 10- and 14-position pinless headers have only one slot for snap-in polarizer (military polarization).
2. 10-position pinless headers have only one slot for dual polarization.
3. For information regarding latch/pin header applications and for ordering latches separately, refer to page 96.
All part numbers are RoHS compliant.

Note: All part numbers are RoHS compliant.

Dimensions are shown for reference purposes only. Specifications subject to change.

Dimensions are in inches and millimeters unless otherwise specified.
USA: +1 (800) 522-6752

Canada: +1 (905) 475-6222
Mexico/C. Am.: +52 (0) 55-1106-0800
Latin/S. Am.: +54 (0) 11-4733-2200
Germany: +49 (0) 6251-133-1999

UK: +44 (0) 800-267666
France: +33 (0) 1-3420-8686
Netherlands: +31 (0) 73-6246-999
China: +86 (0) 400-820-6015

Universal Ejection Style Pinless Headers, Military, Center and Dual Polarized, .100 x .100 [2.54 x 2.54] Centerlines (Continued)

Installation of Press-Fit Pinless Headers

Insertion Instructions:

1. Place pinless header over preinstalled posts so that post tips start into header cavities.
2. With bottom of pc board supported, place steel block over header. Steel block must be wider and longer than header so that it covers all four sides of the header. However, for headers with latches pre-assembled, the steel block must not interfere with the latches.
3. Apply an even, centered force on steel block until header bottoms on pc board. If posts are longer than .545 [13.84], they may be forced against the steel block before the header is fully seated. In this situation, extreme caution must be taken so that posts are not damaged or pushed out of the pc board.

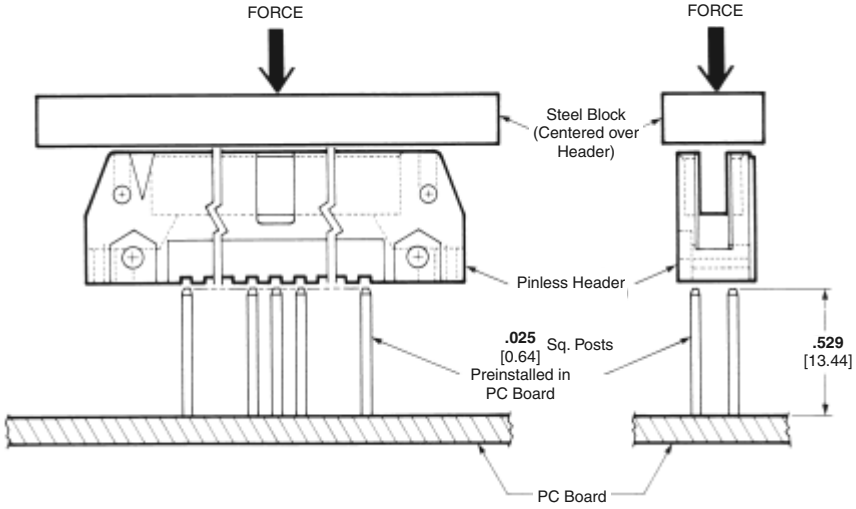

Insertion Force: 60 lb. [267 N] max.
Retention Force: 20 lb. [89 N] min.

TE recommends the use of a typical manual frame assembly for insertion of pinless headers. The frame assembly and steel block are not supplied by TE.

Dimensions are shown for reference purposes only. Specifications subject to change.

Dimensions are in inches and millimeters unless otherwise specified.
USA: +1 (800) 522-6752

Canada: +1 (905) 475-6222
Mexico/C. Am.: +52 (0) 55-1106-0800
Latin/S. Am.: +54 (0) 11-4733-2200
Germany: +49 (0) 6251-133-1999

UK: +44 (0) 800-267666
France: +33 (0) 1-3420-8686
Netherlands: +31 (0) 73-6246-999
China: +86 (0) 400-820-6015

Universal Ejection Style Pin Headers with PCT Housing, .100 x .100 [2.54 x 2.54] Centerlines, .025 [0.64] Sq. Posts (Mating End)

Vertical PCB Mount

Right-Angle PCB Mount

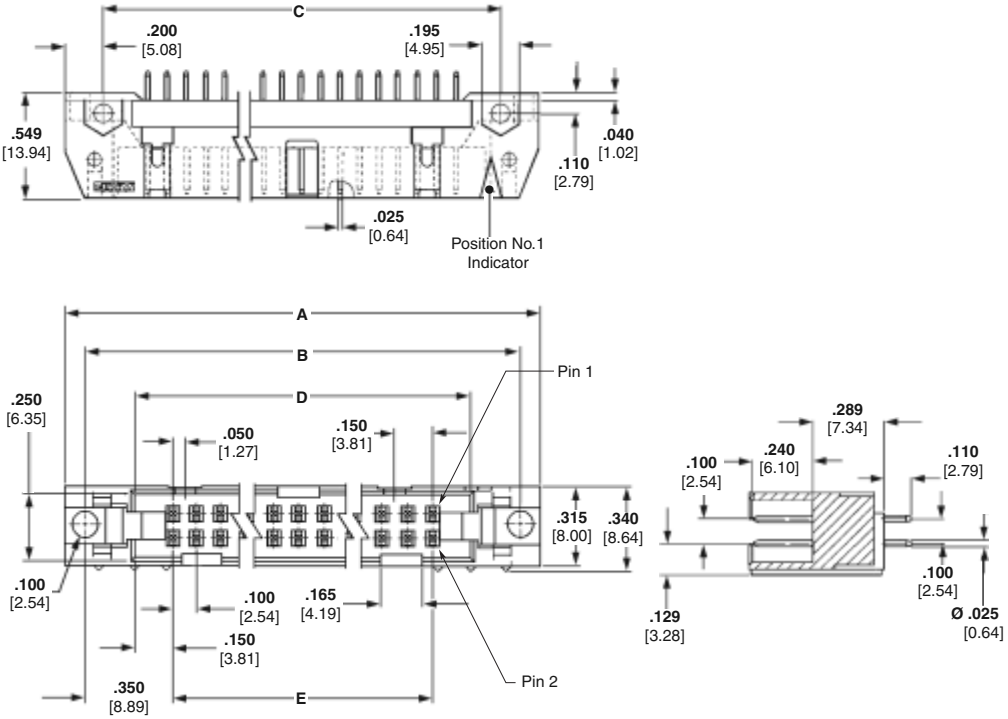

Vertical

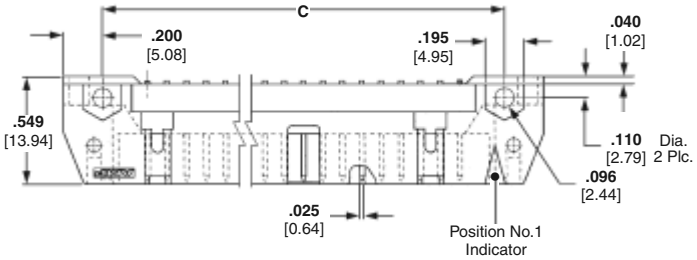

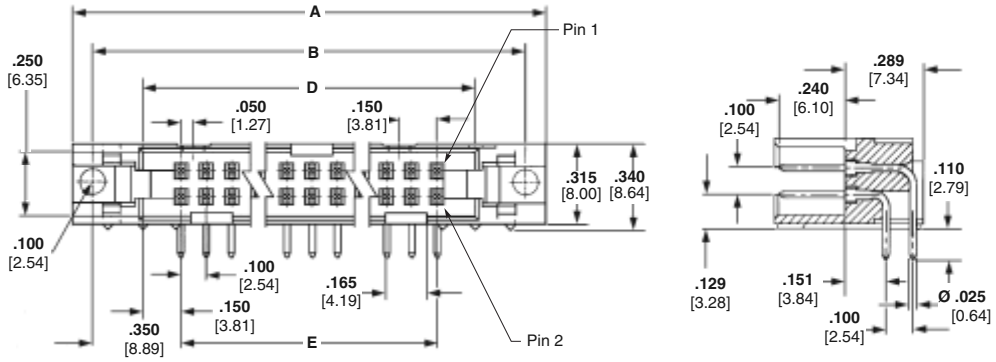

Right-Angle

Material and Finish

Housing — Red PCT, UL 94V-0 rated

Contacts — Brass; Gold flash over palladium-nickel plate, .000030 [0.00076] min. total on the mating surfaces, .000100 [0.00254] min. tin plate on the soldertails, over .000050 [0.00127] min. nickel underplate **or** .000030 [0.00076] min. gold on the mating surfaces, .000100 [0.00254] min. tin plate on the soldertails, over .000050 [0.00127] min. nickel underplate

Related Product Data

Mateable Receptacles — pages 48-55

Accessories —
Snap-In Polarizer — page 63

Technical Documents

Product Specifications
108-40018 Pin Headers

Dimensions are shown for reference purposes only. Specifications subject to change.

Dimensions are in inches and millimeters unless otherwise specified.
USA: +1 (800) 522-6752

Canada: +1 (905) 475-6222
Mexico/C. Am.: +52 (0) 55-1106-0800
Latin/S. Am.: +54 (0) 11-4733-2200
Germany: +49 (0) 6251-133-1999

UK: +44 (0) 800-267666
France: +33 (0) 1-3420-8686
Netherlands: +31 (0) 73-6246-999
China: +86 (0) 400-820-6015

Universal Ejection Style Pin Headers with PCT Housing, .100 x .100 [2.54 x 2.54] Centerlines, .025 [0.64] Sq. Posts (Mating End) (Continued)

No. of Pos.	Dimensions					Part Numbers	
	A	B	C	D	E	Vertical Pin Header (without Latches)	Right-Angle Pin Header (without Latches)
10	**1.260** 32.00	**1.100** 27.94	**.860** 21.84	**.700** 17.78	**.400** 10.16	5111008-1	—
14	**1.460** 37.08	**1.300** 33.02	**1.060** 26.92	**.900** 22.86	**.600** 15.24	—	5111105-2
16	**1.560** 39.62	**1.400** 35.56	**1.160** 29.46	**1.000** 25.40	**.700** 17.78	—	5111105-3
20	**1.760** 44.70	**1.600** 40.64	**1.360** 34.54	**1.200** 30.48	**.900** 22.86	—	5111105-4
24	**1.960** 49.78	**1.800** 40.64	**1.560** 39.62	**1.400** 35.56	**1.100** 27.94	5111008-5	5111105-5
26	**2.060** 52.32	**1.900** 48.26	**1.660** 42.16	**1.500** 38.10	**1.200** 30.48	—	5111105-6
30	**2.260** 57.40	**2.100** 53.34	**1.860** 47.24	**1.700** 43.18	**1.400** 35.56	5111008-7	5111105-7
34	**2.460** 62.48	**2.300** 58.42	**2.060** 52.32	**1.900** 48.26	**1.600** 40.64	5111008-8	5111105-8
40	**2.760** 70.10	**2.600** 66.04	**2.360** 59.94	**2.200** 55.88	**1.900** 48.26	5111008-9	5111105-9
50	**3.260** 82.80	**3.100** 78.74	**2.860** 72.64	**2.700** 68.58	**2.400** 60.98	1-5111008-0	1-5111105-0
60	**3.760** 95.50	**3.600** 91.44	**3.360** 85.34	**3.200** 81.28	**2.900** 73.66	1-5111008-1	1-5111105-1
64	**3.960** 100.58	**3.800** 96.52	**3.560** 90.42	**3.400** 86.36	**3.100** 78.74	1-5111008-2	1-5111105-2

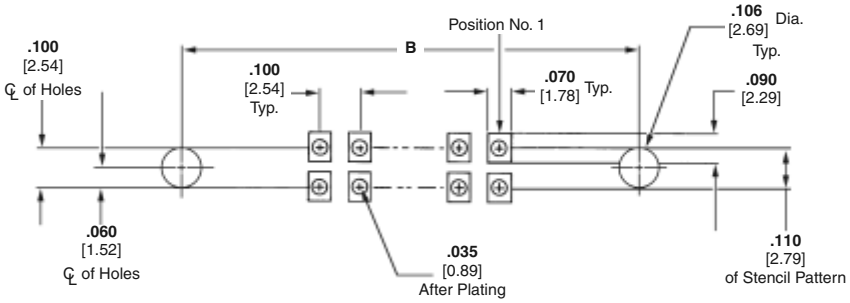

Recommended PC Board Mounting Pattern for Vertical Header

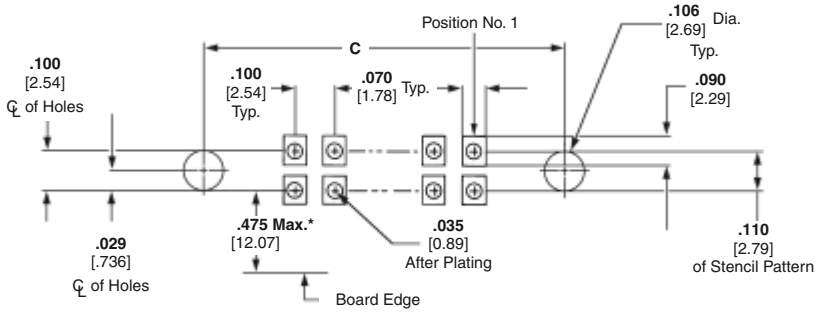

Recommended Pc Board Mounting Pattern for Right-Angle Header
*Max. distance from edge of PC board for daisy chain applications

Note: All part numbers are RoHS compliant.

Dimensions are shown for reference purposes only. Specifications subject to change.

Dimensions are in inches and millimeters unless otherwise specified.
USA: +1 (800) 522-6752

Canada: +1 (905) 475-6222
Mexico/C. Am.: +52 (0) 55-1106-0800
Latin/S. Am.: +54 (0) 11-4733-2200
Germany: +49 (0) 6251-133-1999

UK: +44 (0) 800-267666
France: +33 (0) 1-3420-8686
Netherlands: +31 (0) 73-6246-999
China: +86 (0) 400-820-6015

Latches for Ejection Style Universal Pin Headers and Pinless Headers

Latches for use with Novo Receptacles and Female Socket Connectors, 609, 622 & 636 Series

Material
Red PCT, UL 94V-0 Rated

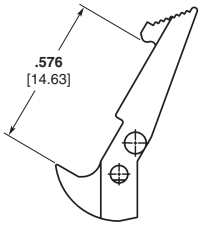

Long Latch Part No. 111338-1
(See Figure 1)

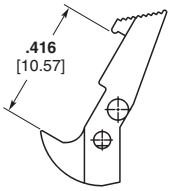

Short Latch Part No. 111293-1
(See Figure 2)

Material
Black thermoplastic, UL 94V-0 Rated

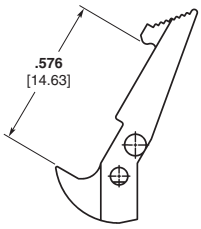

Long Latch Part No. 102320-1
(See Figure 1)

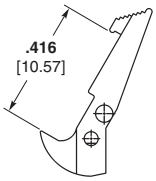

Short Latch Part No. 102312-1
(See Figure 2)

Latch/Pin Header Applications

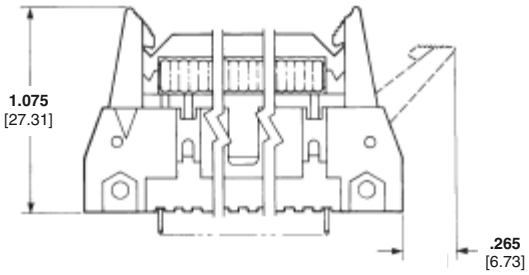

Figure 1 — Use Long Latch for AMP-LATCH Novo Receptacles with Strain Relief & Female Socket Connectors with Strain Relief

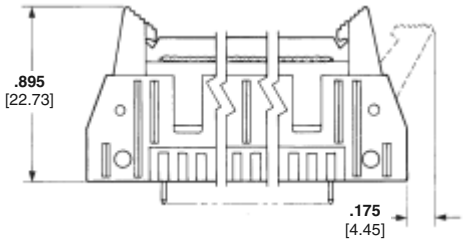

Figure 2 — Use Short Latch for AMP-LATCH Novo Receptacles without Strain Relief & Female Socket Connectors without Strain Relief

Material
Black thermoplastic, UL 94V-0 Rated

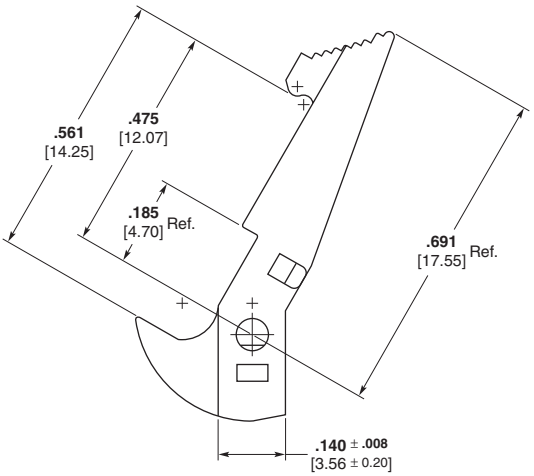

Special Long Latch Part No. 1825851-1 for AMPMODU Mod IV Housing with Center Polarization Key

Note: All part numbers are RoHS compliant.

Dimensions are shown for reference purposes only. Specifications subject to change.

Dimensions are in inches and millimeters unless otherwise specified.
USA: +1 (800) 522-6752

Canada: +1 (905) 475-6222
Mexico/C. Am.: +52 (0) 55-1106-0800
Latin/S. Am.: +54 (0) 11-4733-2200
Germany: +49 (0) 6251-133-1999

UK: +44 (0) 800-267666
France: +33 (0) 1-3420-8686
Netherlands: +31 (0) 73-6246-999
China: +86 (0) 400-820-6015

Cable Solutions

.100 [2.54] Centerline, IDC Ribbon Cable, PVC Insulation

Product Specifications

Voltage Rating — 300 Volts

UL Recognized — AWM Style 2651

CSA — Available on request

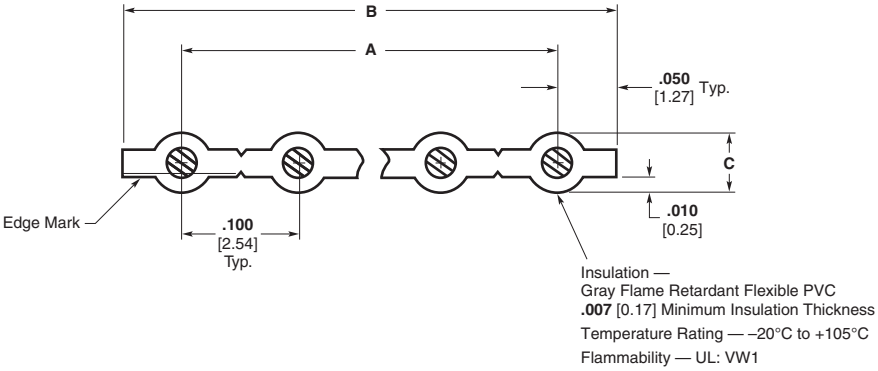

No. of Conductors	Dimensions A	Dimensions B	Dimensions C	Part Number
24 AWG 7/32 Tinned Copper				
2	.100 [2.54]	.200 [5.08]	.044 [1.12]	57746-2
5	.400 [10.16]	.500 [12.70]	.044 [1.12]	57746-5
10	.900 [22.86]	1.000 [25.40]	.044 [1.12]	1-57746-0
15	1.400 [35.56]	1.500 [38.10]	.044 [1.12]	1-57746-5
20	1.900 [48.26]	2.000 [50.80]	.044 [1.12]	2-57746-0
25	2.400 [60.96]	2.500 [63.50]	.044 [1.12]	2-57746-5
28	2.700 [68.58]	2.800 [71.12]	.044 [1.12]	2-57746-8
26 AWG 7/34 Tinned Copper				
2	.100 [2.54]	.200 [5.08]	.039 [0.99]	57744-2
5	.400 [10.16]	.500 [12.70]	.039 [0.99]	57744-5
10	.900 [22.86]	1.000 [25.40]	.039 [0.99]	1-57744-0
15	1.400 [35.56]	1.500 [38.10]	.039 [0.99]	1-57744-5
20	1.900 [48.26]	2.000 [50.80]	.039 [0.99]	2-57744-0
25	2.400 [60.96]	2.500 [63.50]	.039 [0.99]	2-57744-5
28	2.700 [68.58]	2.800 [71.12]	.039 [0.99]	2-57744-8
26 AWG 7/34 Overcoated Tinned Copper				
2	.100 [2.54]	.200 [5.08]	.039 [0.99]	57745-2
5	.400 [10.16]	.500 [12.70]	.039 [0.99]	57745-5
10	.900 [22.86]	1.000 [25.40]	.039 [0.99]	1-57745-0
15	1.400 [35.56]	1.500 [38.10]	.039 [0.99]	1-57745-5
20	1.900 [48.26]	2.000 [50.80]	.039 [0.99]	2-57745-0
25	2.400 [60.96]	2.500 [63.50]	.039 [0.99]	2-57745-5
28	2.700 [68.58]	2.800 [71.12]	.039 [0.99]	2-57745-8

No. of Conductors	Dimensions A	Dimensions B	Dimensions C	Part Number
24 AWG 7/32 Overcoated Tinned Copper				
2	.100 [2.54]	.200 [5.08]	.044 [1.12]	57747-2
5	.400 [10.16]	.500 [12.70]	.044 [1.12]	57747-5
10	.900 [22.86]	1.000 [25.40]	.044 [1.12]	1-57747-0
15	1.400 [35.56]	1.500 [38.10]	.044 [1.12]	1-57747-5
20	1.900 [48.26]	2.000 [50.80]	.044 [1.12]	2-57747-0
25	2.400 [60.96]	2.500 [63.50]	.044 [1.12]	2-57747-5
28	2.700 [68.58]	2.800 [71.12]	.044 [1.12]	2-57747-8
22 AWG 7/30 Tinned Copper				
2	.100 [2.54]	.200 [5.08]	.051 [1.30]	57748-2
5	.400 [10.16]	.500 [12.70]	.051 [1.30]	57748-5
10	.900 [22.86]	1.000 [25.40]	.051 [1.30]	1-57748-0
15	1.400 [35.56]	1.500 [38.10]	.051 [1.30]	1-57748-5
20	1.900 [48.26]	2.000 [50.80]	.051 [1.30]	2-57748-0
25	2.400 [60.96]	2.500 [63.50]	.051 [1.30]	2-57748-5
28	2.700 [68.58]	2.800 [71.12]	.051 [1.30]	2-57748-8

Other Conductor Counts Available on Request.

Contact MADISON CABLE (1-877-MADISON), a Division of TE, for engineering questions or for order placement of this cable.

Dimensions are shown for reference purposes only. Specifications subject to change.

Dimensions are in inches and millimeters unless otherwise specified.
USA: +1 (800) 522-6752

Canada: +1 (905) 475-6222
Mexico/C. Am.: +52 (0) 55-1106-0800
Latin/S. Am.: +54 (0) 11-4733-2200
Germany: +49 (0) 6251-133-1999

UK: +44 (0) 800-267666
France: +33 (0) 1-3420-8686
Netherlands: +31 (0) 73-6246-999
China: +86 (0) 400-820-6015

Cable Solutions (Continued)

.156 [3.96] Centerline, Flat Ribbon Cable, PVC Insulation

Product Specifications

Voltage Rating — 300 Volts

UL Recognized — AWM Style 2651

CSA — Available on request

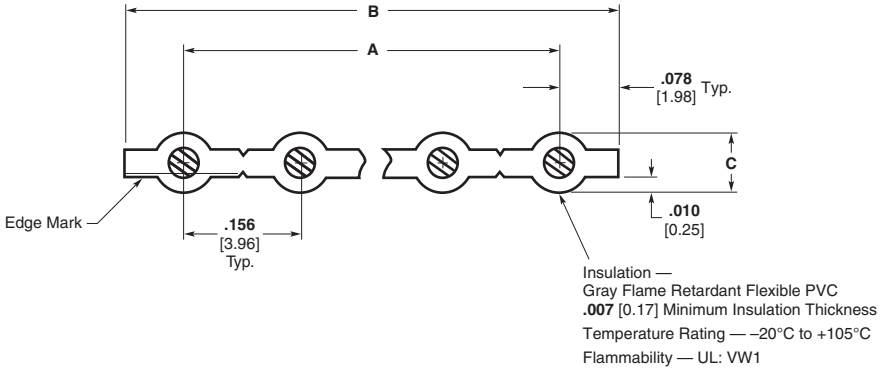

No. of Conductors	Dimensions A	Dimensions B	Dimensions C	Part Number
22 AWG 7/30 Tinned Copper				
2	.156 [3.96]	.312 [7.92]	.051 [1.30]	57750-2
5	.624 [15.85]	.780 [19.81]	.051 [1.30]	57750-5
10	1.404 [35.66]	1.560 [39.62]	.051 [1.30]	1-57750-0
15	2.184 [55.47]	2.340 [59.44]	.051 [1.30]	1-57750-5
20	2.964 [75.29]	3.120 [79.25]	.051 [1.30]	2-57750-0
24	3.588 [91.14]	3.744 [95.10]	.051 [1.30]	2-57750-4
18 AWG 7/26 Tinned Copper				
2	.156 [3.96]	.312 [7.92]	.068 [1.73]	57752-2
5	.624 [15.85]	.780 [19.81]	.068 [1.73]	57752-5
10	1.404 [35.66]	1.560 [39.62]	.068 [1.73]	1-57752-0
15	2.184 [55.47]	2.340 [59.44]	.068 [1.73]	1-57752-5
20	2.964 [75.29]	3.120 [79.25]	.068 [1.73]	2-57752-0
24	3.588 [91.14]	3.744 [95.10]	.068 [1.73]	2-57752-4

Other Conductor Counts Available on Request.

Contact MADISON CABLE (1-877-MADISON), a Division of TE, for engineering questions or for order placement of this cable.

Dimensions are shown for reference purposes only. Specifications subject to change.

Dimensions are in inches and millimeters unless otherwise specified.
USA: +1 (800) 522-6752

Canada: +1 (905) 475-6222
Mexico/C. Am.: +52 (0) 55-1106-0800
Latin/S. Am.: +54 (0) 11-4733-2200
Germany: +49 (0) 6251-133-1999

UK: +44 (0) 800-267666
France: +33 (0) 1-3420-8686
Netherlands: +31 (0) 73-6246-999
China: +86 (0) 400-820-6015

Part Number Index

Note: This index lists all cataloged parts by base no. only. Complete part nos. (with prefixes and/or suffixes) are shown on the page(s) indicated.

Part No.	Page
19156	86
57034	47
57040	47
57744	97
57745	97
57746	97
57747	97
57748	97
57750	98
57752	98
100411	41
102142	92
102198	86
102312	96
102320	96
104068	9, 10
104069	9, 11
104069	11
104072	65
104652	20
104655	21
104656	21
104693	21
104891	27
104892	26
104893	26
104894	24
104895	24
111196	9
111293	96
111338	96
111382	58
111446	45
111451	63
111492	45
111494	46
111504	45
111506	46
111547	67
111614	68
111620	64
111623	17
111626	17
120623	63
147121	21
147381	21
147382	21
147383	21
147384	20
147413	20
147503	21
174638	62
174903	62
175629	62
175637	62

Part No.	Page
188275	36
188431	41
215079	32, 33, 34
215083	38
215083	32, 33, 38
215460	35
215460	32, 33, 35
215464	32, 33, 37
215570	32, 33, 39
338068	41
338069	41
338070	41
338095	32, 33, 40
338096	32, 33, 40
338097	32, 33, 40
338728	41
499252	14, 49, 50, 51, 68
499712	65
499726	92
499991	63
746383	86
746603	47
746610	58
746611	59
1377074	44
1437006	56
1437011	69
1437020	67
1437021	67
1437022	67
1437023	64, 69
1437024	69
1437025	69
1437026	69
1437027	69
1437028	69
1437029	69
1499252	68
1658525	57
1658526	55
1658527	53
1658528	53
1658618	14
1658619	14
1658620	49
1658621	50
1658622	50
1658623	49
1658624	51
1658694	88
1658695	88
1734161	15
1734162	15
1761606	80
1761607	81

Part No.	Page
1761608	80
1761609	81
1761685	82
1761686	82
1761687	82
1761688	82
1761690	83
1761692	83
1761693	82
1761694	82
1825851	96
1888188	15
5088450	66
5102153	85
5102154	85
5102155	85
5102156	85
5102159	90
5102160	90
5102161	90
5102162	90
5102321	85
5102322	90
5103308	76
5103309	76
5103310	77
5103311	77
5104338	78
5104340	79
5111008	95
5111105	95
5111448	46
5111595	12
5111824	15
5499141	90
5499160	85
5499206	85
5499345	90
5499374	85
5499376	90
5499786	90
5499910	85
5499911	85
5499913	90
5499914	90
5499922	85
5499923	85
5499925	90
5746612	59
5746613	59
5746615	60
6437006	61
6489700	15

Dimensions are shown for reference purposes only. Specifications subject to change.

Dimensions are in inches and millimeters unless otherwise specified.

USA: +1 (800) 522-6752
Canada: +1 (905) 475-6222
Mexico/C. Am.: +52 (0) 55-1106-0800
Latin/S. Am.: +54 (0) 11-4733-2200
Germany: +49 (0) 6251-133-1999
UK: +44 (0) 800-267666
France: +33 (0) 1-3420-8686
Netherlands: +31 (0) 73-6246-999
China: +86 (0) 400-820-6015

te.com

© 2012 Tyco Electronics Corporation, a TE Connectivity Ltd. Company. All Rights Reserved.
82012 LUG PDF 04/2012
TE Connectivity and the TE connectivity (logo) are trademarks. Other logos, product and/or company names might be trademarks of their respective owners.