8003 Series

IC Socket 2.54mm(0.100")

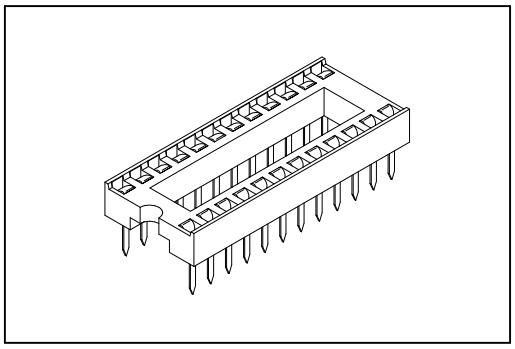

Material:

Housing: Thermoplastic Polyester Glass Filled UL94V-0.
Contacts: Copper Alloy.

Electrical Characteristics:

Current Rating: 1 A.
Dielectric Withstanding Voltage: AC 500V.
Insulator Resistance: 1000MΩ min.
Contact Resistance: 20mΩ max.
Operating Temperature: -25°C~+85°C.

Features:

* Side to side and end to end stackable.
* Dual leaf contact offers high reliability.
* 6pin through 64 pin available.

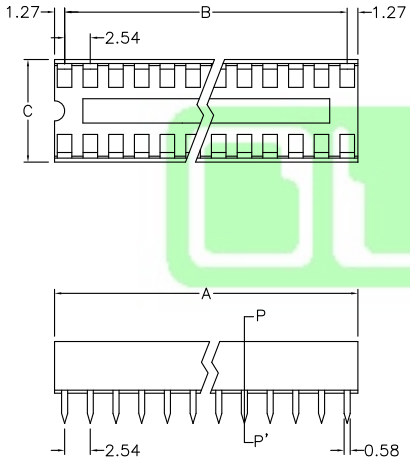

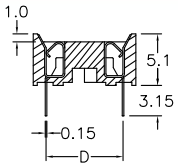

Section P-P'

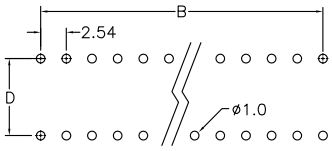

P.C. Board Layout

Position	Dimension				
	Part No.	A	B	C	D
6	8003-06T3	7.62	5.08	10.16	7.62
8	8003-08T3	10.16	7.62	10.16	7.62
14	8003-14T3	17.78	15.24	10.16	7.62
16	8003-16T3	20.32	17.78	10.16	7.62
18	8003-18T3	22.86	20.32	10.16	7.62
20	8003-20T3	25.40	22.86	10.16	7.62
22	8003-22T4	27.94	25.40	12.70	10.16
24	8003-24T3	30.48	27.94	10.16	7.62
24	8003-24T6	30.48	27.94	17.78	15.24
28	8003-28T3	35.56	33.02	10.16	7.62
28	8003-28T6	35.56	33.02	17.78	15.24
32	8003-32T6	40.64	38.10	17.78	15.24
40	8003-40T6	50.80	48.26	17.78	15.24
42	8003-42T6	53.34	50.80	17.78	15.24
48	8003-48T6	60.90	58.36	17.78	15.24

Ordering information

8003-	24	T	3	U
Series	No. of Pin Count	T: Tin Plated	3: 7.62mm(0.30") Row Spacing 4: 10.16mm(0.40") Row Spacing 6: 15.24mm(0.60") Row Spacing 9: 22.86mm(0.90") Row Spacing	U: Tube Package

* 8003-K Self locking available, please consult factory.