Alle Rechte vorbehalten/ *All rights reserved*

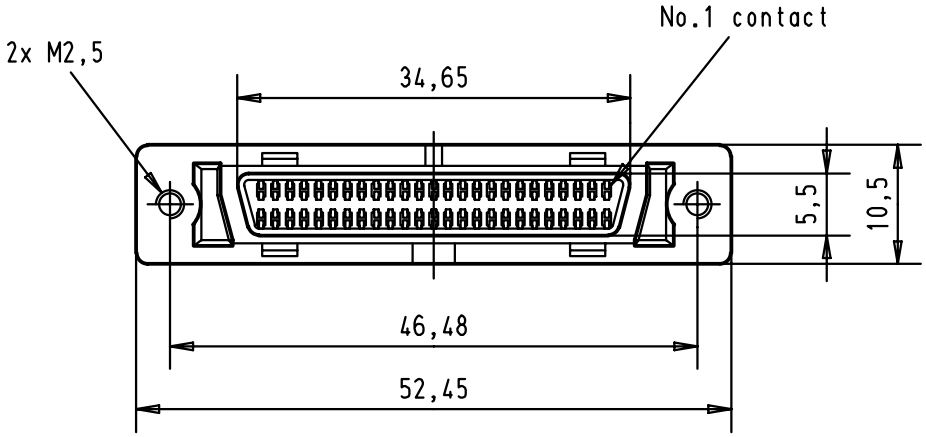


Printed board layout
Component side

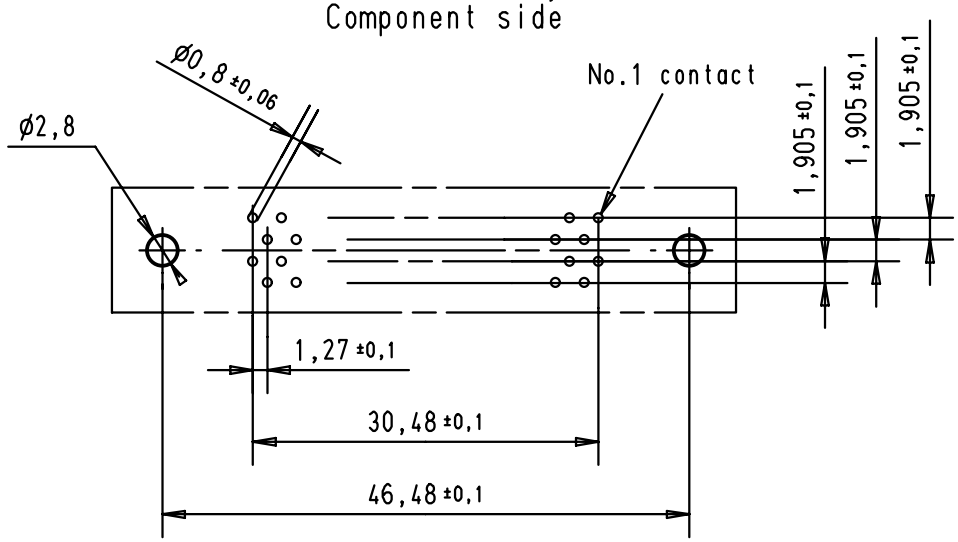


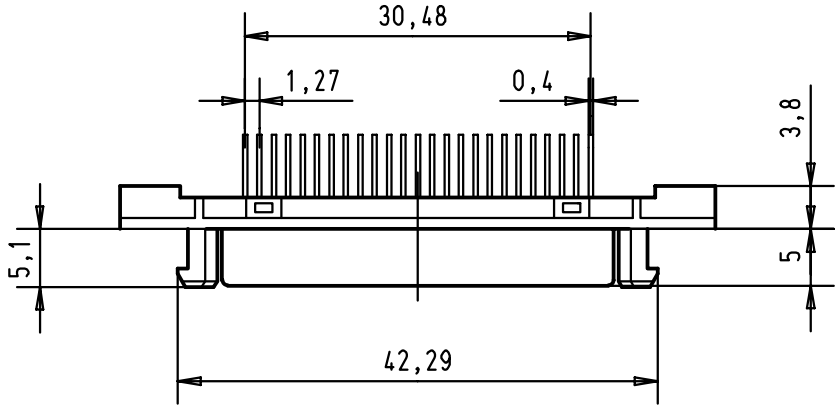


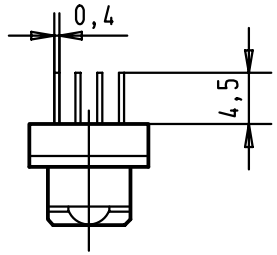


| | | | | Dat. | Name | | | Maßstab/ *Scale* |
|---|---|---|---|---|---|---|---|---|
| | | | Detail. | 05-DEC-01 | JB | All Dim. in mm Orig. Size DIN A 4 | *har.mik* ® I/O pin/socket 50 poles female connector with straight solder pins 4,5mm and fixed latching | 1,5:1 |
| | | | Insp. | | | | | |
| | | | Stand. | | | | | |
| 29740 | 05-DEC-01 | JB | HARTING EURL F-95972 Paris | | | | TB 60 01 050 5104 | Blatt/*Page* 1/1 |
| Mod. | Dat. | Name | | | | | Sub. | |