Alle Rechte vorbehalten/ *All rights reserved*

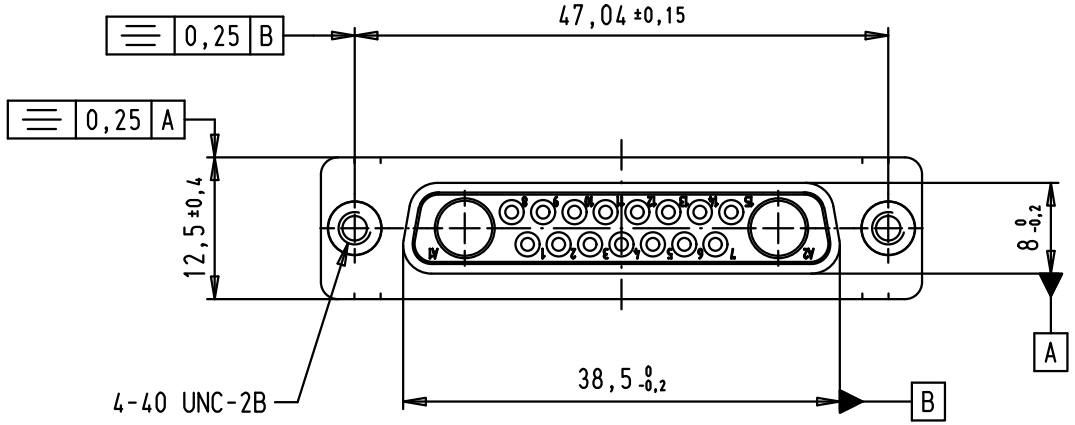

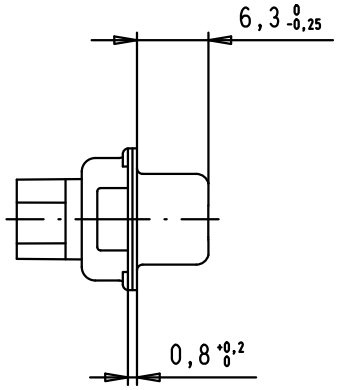

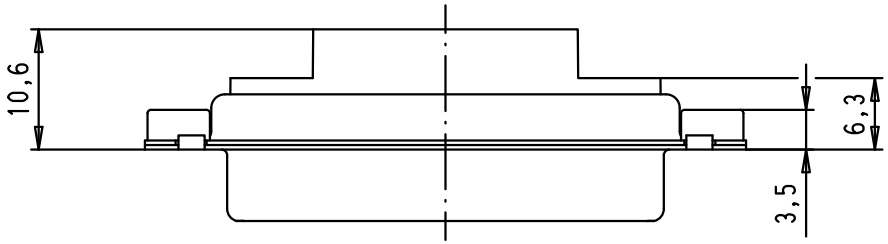

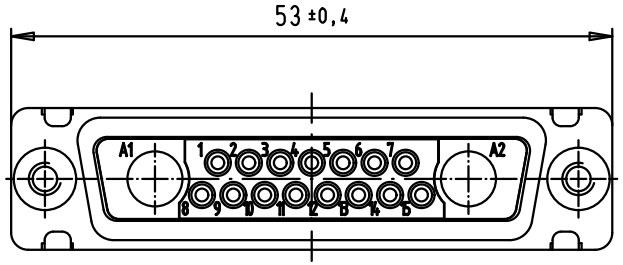

				Dat.	Name			Maßstab/ *Scale*
			Detail.	06/09/07	PK	All Dim. in mm Orig. Size DIN A 4	D-Sub, 17W2, female, straight, without contacts, tin plated shell with clinch nuts	1,5:1
			Insp.					
			Stand.					
33999	06/09/07	PK	HARTING EURL F-95972 Paris				TB 09 69 340 0172	Blatt/ *Page* 1/1
Mod.	Dat.	Name					Sub.	