REV	ECN NO	REVISIONS	DRN	CKD	APP	DATE
A	——	NEW RELEASE	AJF	KLJ	NO	12-1-10

RoHS COMPLIANT 515-1023-803F

Part Numbers with the "F" suffix ending are RoHS Compliant. Packaging is marked with "RoHS Compliant" label or equivalent markings.

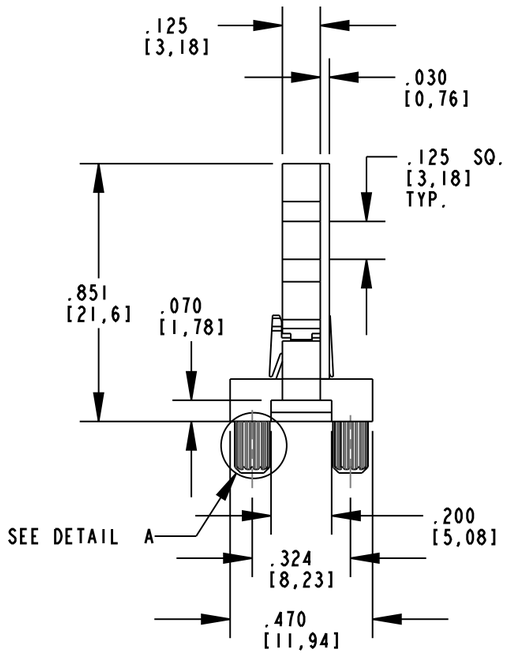

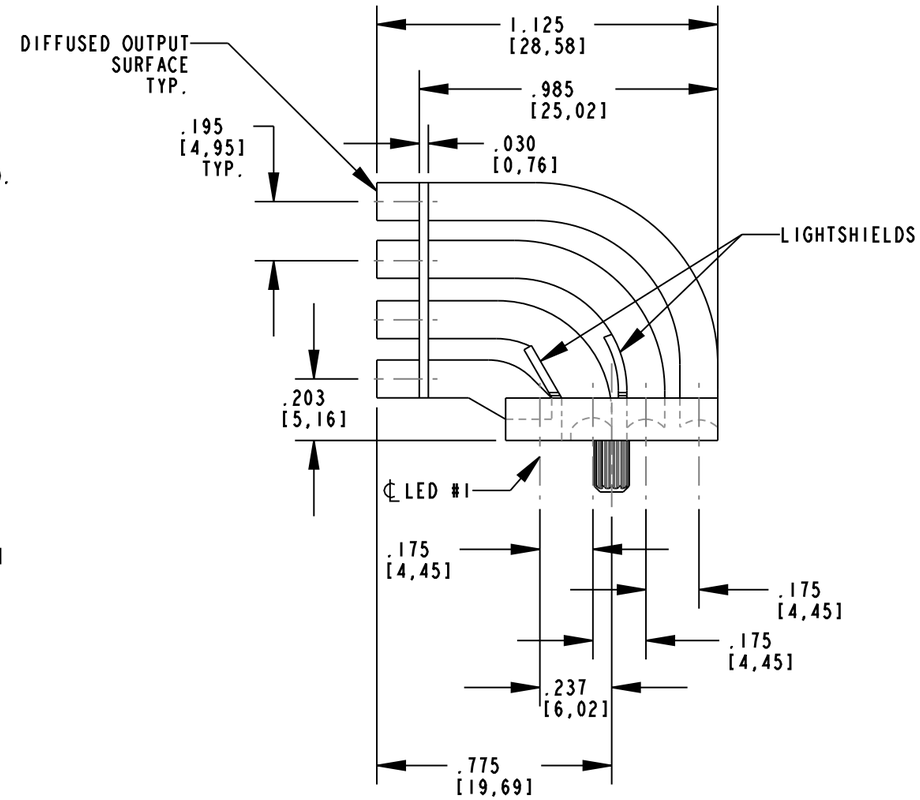

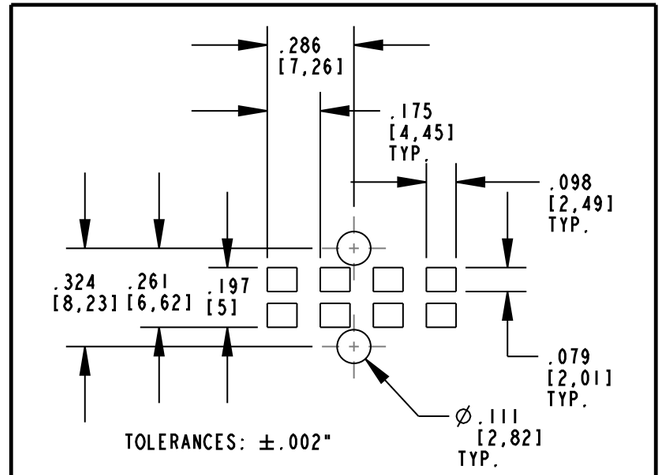

SINGLE COLOR LED SOLDER PAD LAYOUT
& HOLE PATTERN GAUGE

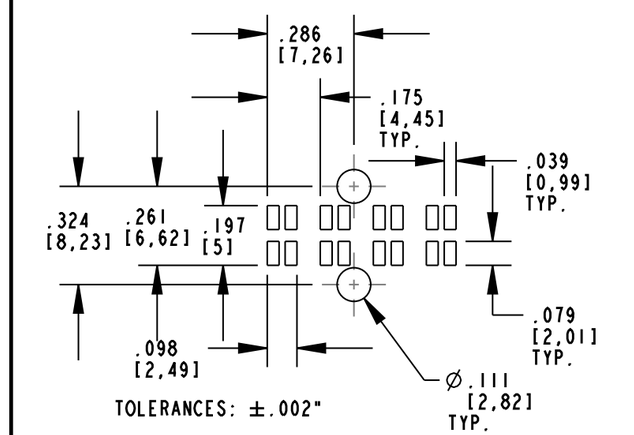

BI-COLOR LED SOLDER PAD LAYOUT
& HOLE PATTERN GAUGE

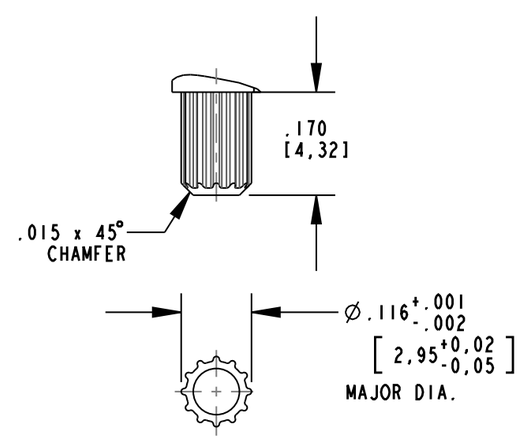

DETAIL A
SCALE 4.000

NOTES:

1. DIALIGHT PART NUMBER: 515-1023-803F.
2. ASSEMBLY CONSISTS OF (1) QUAD LEVEL LIGHT PIPE (P/N: 515-1023F) AND (2) LIGHTSHIELDS.
3. COMPONENTS DESIGNED TO BE PRESSED INTO PC BOARD.
4. MATERIAL TO BE CLEAR, TRANSMISSIVE POLYCARBONATE (UL 94V-0 FLAMMABILITY). (LIGHTPIPE ONLY).
5. STORAGE AND OPERATING TEMPERATURE: -30 TO +100°C.
6. RECOMMENDED SURFACE MOUNT LEDS DIALIGHT PART NUMBERS:
   SINGLE COLOR: 597-3XX1-10XF
   BI-COLOR: 597-77X1-10XF

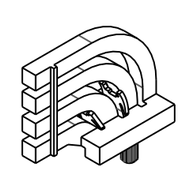

SCALE 1.000

THIS DRAWING AND THE CONTENTS HEREIN ARE CONFIDENTIAL AND THE SOLE PROPERTY OF DIALIGHT. REPRODUCTION OF THIS DRAWING OR CONSTRUCTION OF ANY PARTS WITHIN THIS DRAWING ARE FORBIDDEN WITHOUT THE WRITTEN CONSENT OF DIALIGHT.

SCALE: 2.000
ALL DIM'S IN: INCHES (MM)

TOLERANCES:
UNLESS OTHERWISE SPECIFIED
FRACTIONS: ±1/64
DECIMALS (.XX): ±.02
DECIMALS (.XXX): ±.015
ANGLES: ±1°

FINISH:

FSCM 83330

DRAWING NUMBER: C-17840
REV: A

TITLE: QUAD LEVEL LIGHTPIPE W/ 2 LIGHTSHIELDS

MATERIAL

Dialight
1501 ROUTE 34 SOUTH
FARMINGDALE, NJ 07727

SHEET 1 OF 1
FAMILY TABLE: