Table of Contents

How to Use This Catalog

Base part number

Semiconductor device

Style description for heat sink

Icons indicate that a mounting kit, grease or epoxy can be used with the heat sink

TO-220 Heat Sinks

7022 Channel style heat sink with folded back fins

Grease & Epoxy page112

Mounting Kits page 99

Semiconductor devices have been included in photos to assist in determining mounting position.

Detailed description illustrates the heat sink's differentiating features.

Channel style heat sink with folded back fins for increased cooling surface area. Available with tin plated solderable tabs for easy attachment to the printed circuit card.

Thermal graphs show natural and forced convection based on black anodize finish. For information on how to use a thermal graph, please refer to page 11.

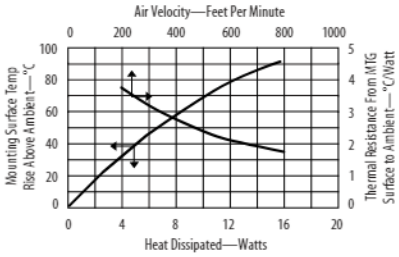

Mechanical drawing dimensions as shown are mm (inches)

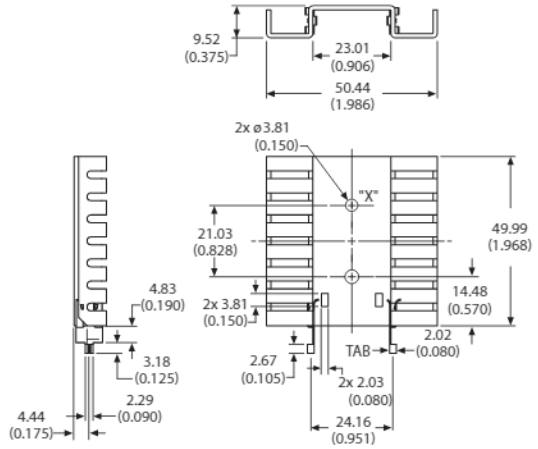

Material and finish information is shown for each part

Material: 1.27 (0.050) Thick Aluminum
Finish: See Table

Ordering information will specify the base heat sink with available accessories.

ORDERING INFORMATION

Part Number	Description	Finish	Dia of PCB Plated Thru Hole for Tabs
7022BG	Channel heat sink with folded back fins	Black anodize	
7022PBG	Channel heat sink with folded back fins	Pre-black anodize*	
7022B-MTG	With solderable tabs	Black anodize	2.90 (0.114)
7022PB-MTG	With solderable tabs	Pre-black anodize*	2.90 (0.114)

* Edges cut during the manufacturing process will be unfinished.
See page XX for more information

Aavid has a large selection of popular options to enhance your heat sink selection. This section will indicate the most popular options available.

POPULAR OPTIONS: 7022B- ___ G

Base part no. A RoHS Compliant

Position	Code	Description	Location	Details
A	TC11-MT	Insulated device mounting clip for T0-220 and solderable tabs	Hole X	Page

For additional options see page xx

Detailed indexes are available to select additional options.

AAVID THERMALLOY
www.aavidthermalloy.com

AMERICA
USA Tel: +1 (603) 224-9988 email: info@aavid.com

EUROPE
Italy Tel: +39 051 764011 email: sales.it@aavid.com
United Kingdom Tel: +44 1793 401400 email: sales.uk@aavid.com

ASIA
Singapore Tel: +65 6362 8388 email: sales@aavid.com.sg
Taiwan Tel: +886(2) 2698-9888 email: sales@aavid.com.tw

Index by Part Number

INDEX

Index by Device Cooled and Thermal Resistance

KEY

H = Horizontal mount

V = Vertical mount

H–V = Either horizontal or vertical depending on device leads

θn = Natural convection thermal resistance based on a 75°C heat sink temperature rise

AAVID THERMALLOY
www.aavidthermalloy.com

AMERICA **USA** Tel: +1 (603) 224-9988 email: info@aavid.com

EUROPE **Italy** Tel: +39 051 764011 email: sales.it@aavid.com
United Kingdom Tel: +44 1793 401400 email: sales.uk@aavid.com

ASIA **Singapore** Tel: +65 6362 8388 email: sales@aavid.com.sg
Taiwan Tel: +886(2) 2698-9888 email: sales@aavid.com.tw

TO-247

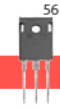

TO-262

Index by Device Cooled, Heat Sink Style, and Thermal Resistance

KEY

H = Horizontal mount

V = Vertical mount

H–V = Either horizontal or vertical depending on device leads

θn = Natural convection thermal resistance based on a 75°C heat sink temperature rise

AAVID THERMALLOY
www.aavidthermalloy.com

AMERICA
USA Tel: +1 (603) 224-9988 email: info@aavid.com

EUROPE
Italy Tel: +39 051 764011 email: sales.it@aavid.com
United Kingdom Tel: +44 1793 401400 email: sales.uk@aavid.com

ASIA
Singapore Tel: +65 6362 8388 email: sales@aavid.com.sg
Taiwan Tel: +886(2) 2698-9888 email: sales@aavid.com.tw

Index by Device Cooled, Heat Sink Style, and Thermal Resistance

Part Number	θn	Board Mounting	Page
TO-220 CONTINUED			
SW38-2G	10.2	V	56
SW38-4G	10.2	V	56
SW38-6G	10.0	V	59
534002B02554G	9.0	V	50
533202B02551G	9.0	V	55
513202B02500G	9.0	V	58
SW50-2G	8.8	V	56
SW50-4G	8.8	V	56
YB32-4G	8.4	V	61
533302B02551G	8.0	V	55
530002B02500G	2.6	V	56
513302B02500G	8.0	V	58
531302B02500G	8.0	V	59
531302V02500G	8.0	V	59
531202V02500G	7.5	V	59
531202B02500G	7.5	V	59
BW38-2G	7.2	V	58
BW38-4G	7.2	V	58
SW63-2G	7.0	V	56
SW63-4G	7.0	V	56
BW50-2G	5.8	V	58
BW50-4G	5.8	V	58
533702B02552G	5.7	V	57
6396BG	5.6	V	60
6396B-P2G	5.6	V	60
532602B02500G	5.5	V	50
529702B02500G	5.5	V	56
533402B02552G	5.0	V	57
532702B02500G	4.8	V	50
BW63-2G	4.7	V	58
BW63-4G	4.7	V	58
529902B02500G	4.5	V	56
533502B02552G	4.5	V	57
6398BG	4.4	V	60
6398B-P2G	4.4	V	60
532802B02500G	4.2	V	50
533602B02552G	3.8	V	57
529802B02500G	3.7	V	56
6399BG	3.3	V	60
6399B-P2G	3.3	V	60
6400BG	2.7	V	60
6400B-P2G	2.7	V	60
Hat Section Heat Sinks			
6237BG	25.0	H	42
6237PBG	25.0	H	42
TV96G	24.0	H	53
7137DG	20.8	V	42
7140DG	20.8	H	42
506902B00000G	20.0	V	42
TV97G	20.0	H–V	53
507002B00000G	15.6	H–V	42
507102B00000G	15.6	H–V	42
507222B00000G	9.6	H	42
High Rise Style Heat Sinks			
530102B00100G	6.3	V	54
530102B00150G	6.3	V	54
530802B05100G	6.3	V	54
530802B05150G	6.3	V	54
530402B00100G	6.3	V	55
530402B00150G	6.3	V	55
Plug In Style Heat Sinks			
576802B00000G	27.3	V	52
576802V00000G	32.6	V	52
576802U00000G	32.6	V	52
576802B03100G	27.3	H	52
576802V03100G	32.6	H	52
576802U03100G	32.6	H	52
576802B04000G	27.3	V	52
576802V04000G	32.6	V	52
576802U04000G	32.6	V	52
591202B00000G	26.8	H-V	51
591202B03100G	26.8	H	51
591202B04000G	26.8	V	51
591302B00000G	26.8	H-V	51
591302B02800G	26.8	V	51
591302B04000G	26.8	H	51
PF432G	20.3	V	52
PF433G	20.3	V	52
PF434G	20.3	H	52
PF435G	20.3	V	52
PF436G	20.3	H	52
566902B00000G	18.8	H-V	53
566902B03100G	18.8	H	53
566902B04000G	18.8	V	53
Slide On Heat Sinks			
PF730G	35.8	V	65
PF732G	35.8	V	65
PF720G	28.9	V	44
PF723G	28.9	V	44
PF752G	23.7	V	44
574402B00000G	23.2	H-V	45
574402B03200G	23.2	H	45
574102B00000G	23.2	H–V	45
574102B03300G	23.2	V	45
574602B00000G	21.6	H-V	45
574602B03300G	21.6	V	45
574502B00000G	21.2	H-V	45
574502B03300G	21.2	V	45
PF750G	20.3	V	44
PF758G	17.3	V	44
574902B00000G	16.0	H-V	45
574902B03300G	16.0	V	45
Snap Down Style Heat Sinks			
575102B00000G	16.8	H–V	46
579302B00000G	16.8	V	46
579402B00000G	16.8	V	46
Space Saving Heat Sinks			
542502B00000G	24.0	H	49
542502D00000G	24.0	H	49
592502B03400G	22.0	V	49
592502U03400G	22.0	V	49
6025DG	17.9	V	48
6022PBG	16.7	V	47
6022BG	16.7	V	47
6225B-MTG	15.0	V	47
593202B03500G	10.4	V	48
6232B-MTG	10.0	V	48
6232PB-MTG	10.0	V	48
6032DG	8.3	V	47
Square Basket Heat Sink			
569022B00000G	5.5	H	42
TO-247			
Dual Extruded Heat Sinks			
533721B02552G	5.7	V	57
533421B02552G	5.0	V	57
533521B02552G	4.5	V	57
533621B02552G	3.8	V	57
Dual High Rise Style Heat Sinks			
530161B00162G	4.4	V	54
530861B05162G	4.4	V	54
Extruded Heat Sinks			
513001B02500G	13.4	V	58
533001B02551G	13.0	V	55
SW25-2G	11.4	V	56
SW25-4G	11.4	V	56
533101B02551G	11.0	V	55
513101B02500G	11.0	V	58
SW38-2G	10.2	V	56
SW38-4G	10.2	V	56
533201B02551G	9.0	V	55
513201B02500G	9.0	V	58
SW50-2G	8.8	V	56
SW50-4G	8.8	V	56
YB32-4G	8.4	V	61
533301B02551G	8.0	V	55
530001B02500G	8.0	V	56
513301B02500G	8.0	V	58
BW38-2G	7.2	V	58
BW38-4G	7.2	V	58
SW63-2G	7.0	V	56
SW63-4G	7.0	V	56
6380BG	6.8	V	60
BW50-2G	5.8	V	58
BW50-4G	5.8	V	58
6381BG	5.8	V	60
533701B02552G	5.7	V	57
6396BG	5.6	V	60
6396B-P2G	5.6	V	60
529701B02500G	5.5	V	56
533401B02552G	5.0	V	57
6374BG	5.0	V	61
529801B02500G	5.0	V	56
BW63-2G	4.7	V	58
BW63-4G	4.7	V	58
529901B02500G	4.5	V	56
533501B02552G	4.5	V	57
6398BG	4.4	V	60
6398B-P2G	4.4	V	60
6382BG	4.2	V	60
533601B02552G	3.8	V	57
6399BG	3.3	V	60
6399B-P2G	3.3	V	60
6400BG	2.7	V	60
6400B-P2G	2.7	V	60
Hat Section Heat Sinks			
TV96G	24.0	H	53
TV97G	20.0	H–V	53
High Rise Style Heat Sinks			
530101B00100G	6.3	V	54
530101B00150G	6.3	V	54
530801B05100G	6.3	V	54
530801B05150G	6.3	V	54
530401B00100G	6.3	V	55
530401B00150G	6.3	V	55
TO-262			
Plug In Style Heat Sinks			
576802B00000G	27.3	H–V	52
576802V00000G	32.6	H–V	52
576802U00000G	32.6	H–V	52
576802B03100G	27.3	H	52
576802V03100G	32.6	H	52
576802U03100G	32.6	H	52
576802B04000G	27.3	V	52
576802V04000G	32.6	V	52
576802U04000G	32.6	V	52
591202B00000G	26.8	H-V	51
591202B03100G	26.8	H	51
591202B04000G	26.8	V	51
591302B00000G	26.8	H-V	51
591302B02800G	26.8	V	51
591302B04000G	26.8	H	51
566902B00000G	18.8	H-V	53
566902B03100G	18.8	H	53
566902B04000G	18.8	V	53
PF432G	20.3	V	52
PF433G	20.3	V	52
PF434G	20.3	H	52
PF435G	20.3	V	52
PF436G	20.3	H	52

KEY

H = Horizontal mount

V = Vertical mount

H–V = Either horizontal or vertical depending on device leads

θn = Natural convection thermal resistance based on a 75°C heat sink temperature rise

AAVID THERMALLOY
www.aavidthermalloy.com

AMERICA
USA Tel: +1 (603) 224-9988 email: info@aavid.com

EUROPE
Italy Tel: +39 051 764011 email: sales.it@aavid.com
United Kingdom Tel: +44 1793 401400 email: sales.uk@aavid.com

ASIA
Singapore Tel: +65 6362 8388 email: sales@aavid.com.sg
Taiwan Tel: +886(2) 2698-9888 email: sales@aavid.com.tw

How to select a heat sink

The basic equation for heat transfer or power dissipation may be stated as follows:

$$P_D = \frac{\Delta T}{\Sigma R_\theta}$$

Where:

P_D = the power dissipated by the semiconductor device in watts.

ΔT = the temperature difference of driving potential which causes the flow of heat.

ΣR_θ = the sum of the thermal resistances of the heat flow path across which ΔT exists.

The above relationship may be stated in the following forms:

$$P_D = \frac{T_J - T_A}{R_{\theta JC} + R_{\theta CS} + R_{\theta SA}} \qquad P_D = \frac{T_C - T_A}{R_{\theta CS} + R_{\theta SA}} \qquad P_D = \frac{T_S - T_A}{R_{\theta SA}}$$

Where:

T_J = the junction temperature in °C (maximum is usually stated by the manufacturer of the semiconductor device).

T_C = case temperature of the semiconductor device in °C.

T_S = temperature of the heat sink mounting surface in thermal contact with the semiconductor device in °C.

T_A = ambient air temperature in °C.

$R_{\theta JC}$ = thermal resistance from junction to case of the semiconductor device in °C per watt (usually stated by manufacturer of semiconductor device).

$R_{\theta CS}$ = thermal resistance through the interface between the semiconductor device and the surface on which it is mounted in °C per watt.

$R_{\theta SA}$ = thermal resistance from mounting surface to ambient or thermal resistance of heat sink in °C per watt.

The above equations are generally used to determine the required thermal resistance of the heat sink ($R_{\theta SA}$), since the heat dissipation, maximum junction and/or case temperature, and ambient temperature are known or set.

Figure 1 indicates the location of the various heat flow paths, temperatures and thermal resistances.

The common practice is to represent the system with a network of resistances in series as shown in Figure 2.

FIGURE 1

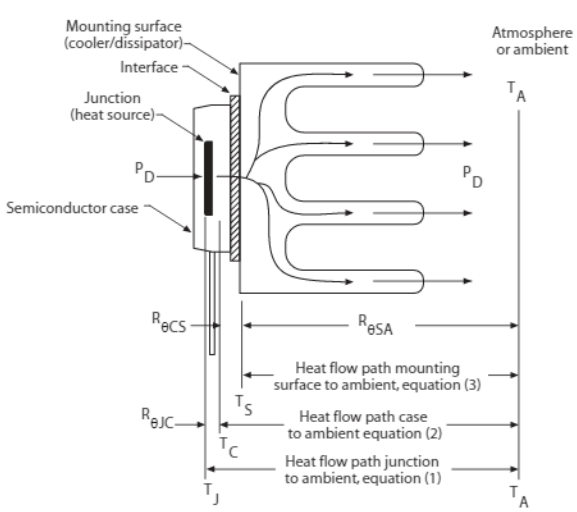

FIGURE 2

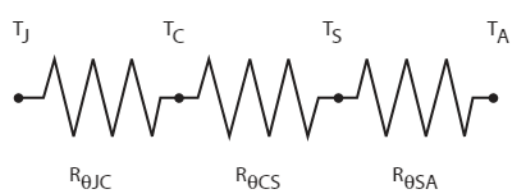

Example A

Find a space saving heat sink to keep a TO-220 device below the maximum 150°C junction temperature in natural convection. Device will be screw mounted with an electrically conductive interface.

Given:
P_D = 6 watts
$R_{\theta JC}$ = 3°C/W (from semiconductor manufacturer)
T_J max = 150°C (from semiconductor manufacturer)
T_A max = 65°C

A Kondux™ pad is a good choice for electrically conductive applications. Thermal resistance for Kondux™ can be determined from the following graph.

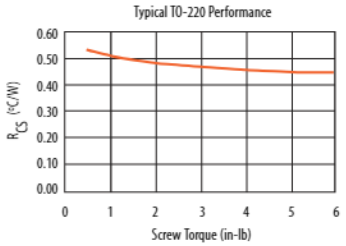

At 2 in-lb of torque the thermal resistance is approximately $R_{\theta CS}$ = 0.5°C/W

Using equation 1, solve for $R_{\theta SA}$

$$R_{\theta SA} = \frac{150 - 65}{6} - (3 + 0.5) = 10.7°C/W$$

The Index by Heat Sink Style on page 8 lists space saving heat sinks. Several models are in the 10 °C/W range. Choose the one that best fits the application and verify thermal resistance from graph.

Part number 593202B03500G shows a 60 °C temperature rise at 6 watts.

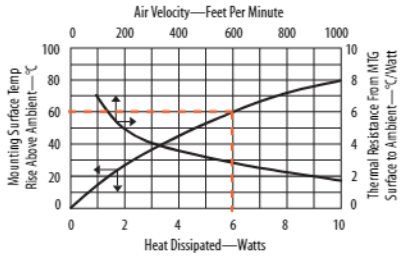

$$R_{\theta SA} = \frac{60}{6} = 10.0°C/W$$

Which meets the above requirement in natural convection.

Example B

Find a heat sink to keep a TO-220 device below the maximum 150 °C junction temperature in forced convection at 400 ft/min. Device must be electrically insulated and mounted with a labor saving clip.

Given:
P_D = 12 watts
$R_{\theta JC}$ = 2.5°C/W (from semiconductor manufacturer)
T_J max = 140°C (from semiconductor manufacturer)
T_A max = 50°C

A Hi-Flow® pad works great with clip mounting and provides the necessary electrical insulation. Thermal resistance for Hi-Flow® at low pressure is 1.15°C/W (from page 87). Using equation 1, solve for $R_{\theta SA}$

$$R_{\theta SA} = \frac{140 - 50}{12} - (2.5 + 1.15) = 3.85°C/W$$

Many styles are available. If board space is a concern, 533202B02551G (pg 55) meets the requirements.

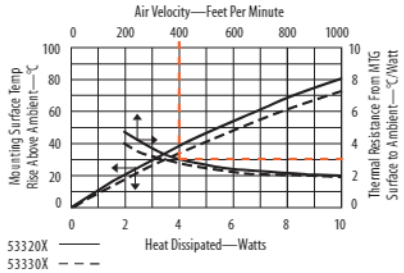

According to the above graph, an airflow of 400 ft/min results in a thermal resistance of 3°C/W. This is less than the required thermal resistance of 3.85°C/W and is therefore acceptable under these airflow conditions.

If height is a concern, 533702B02552G would meet the requirements and is only 1.0" tall

Hi-Flow® is a trademark of the Bergquist Company

AAVID THERMALLOY
www.aavidthermalloy.com
AMERICA USA Tel: +1 (603) 224-9988 email: info@aavid.com
EUROPE Italy Tel: +39 051 764011 email: sales.it@aavid.com
United Kingdom Tel: +44 1793 401400 email: sales.uk@aavid.com
ASIA Singapore Tel: +65 6362 8388 email: sales@aavid.com.sg
Taiwan Tel: +886(2) 2698-9888 email: sales@aavid.com.tw

The performance graphs you will see in this catalog (see graph 579802) are actually a composite of two separate graphs which have been combined to save space. The small arrows on each curve indicate to which axis the curve corresponds. Thermal graphs are published assuming the device to be cooled is properly mounted and the heat sink is in its recommended mounting position.

579802

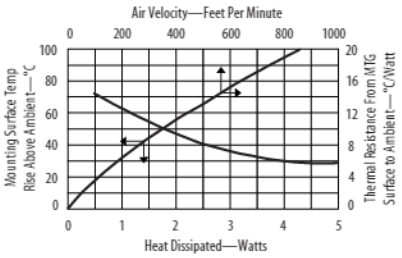

GRAPH A

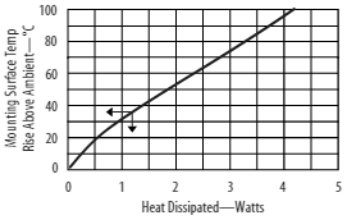

GRAPH B

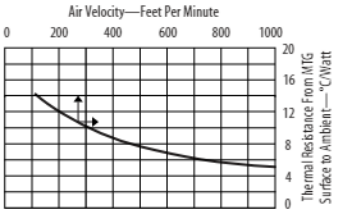

GRAPH A is used to show heat sink performance when used in a natural convection environment (i.e. without forced air). This graph starts in the lower left hand corner with the horizontal axis representing the heat dissipation (watts) and the vertical left hand axis representing the rise in heat sink mounting surface temperature above ambient (°C). By knowing the power to be dissipated, the temperature rise of the mounting surface can be predicted. Thermal resistance in natural convection is determined by dividing this temperature rise by the power input (°C/W).

EXAMPLE A: Aavid Thermalloy part number 579802 is to be used to dissipate 3 watts of power in natural convection. Because we are dealing with natural convection, we refer to graph "A". Knowing that 3 watts are to be dissipated, follow the grid line to the curve and find that at 3 watts there is a temperature rise of 75°C. To get the thermal resistance, divide the temperature rise by the power dissipated, which yields 25°C/W.

GRAPH B is used to show heat sink performance when used in a forced convection environment (i.e. with forced air flow through the heat sink). This graph has its origin in the top right hand corner with the horizontal axis representing air velocity over the heat sink LFM* and the vertical axis representing the thermal resistance of the heat sink (°C/W). Air velocity is calculated by dividing the output volumetric flow rate of the fan by the cross-sectional area of the outflow air passage.

$$\text{Velocity (LFM)}^* = \frac{\text{Volume (CFM)}^{**}}{\text{area (ft}^2)}$$

EXAMPLE B: For the same application we add a fan which blows air over the heat sink at a velocity of 400 LFM.
The addition of a fan indicates the use of forced convection and therefore we refer to graph "B". This resistance of 9.50°C/W is then multiplied by the power to be dissipated, 3 watts. This yields a temperature rise of 28.5°C.

CONVERTING VOLUME TO VELOCITY

Although most fans are normally rated and compared at their free air delivery at zero back pressure, this is rarely the case in most applications. For accuracy, the volume of output must be derated 60%–80% for the anticipation of back pressure.

EXAMPLE: The output air volume of a fan is given as 80 CFM. The output area is 6 inches by 6 inches or 36 in² or 25 ft². To find velocity:

$$\text{Velocity (LFM)} = \frac{\text{Volume (CFM)}}{\text{area (ft}^2)}$$

$$\text{Velocity} = \frac{80}{0.25} = 320$$

Velocity is 320 LFM, which at 80%, derates to 256 LFM.

DESIGN ASSISTANCE

Aavid Thermalloy can assist in the design of heat sinks for both forced and natural convection applications. Contact us for help with your next thermal challenge. For more information, visit our web site at: **www.aavidthermalloy.com**

* Linear feet per minute

** Cubic feet per minute

BGA–Solder Anchor

Solder anchor attachment

Aavid's unique Solder anchor attachment method uses two or four small Solder anchors attached to the circuit card and a wire spring clip to securely fasten the heat sink to the device. This method is rugged, compact and allows for easy removal in case of rework.
All products include a phase change pad suitable for most IC package styles to optimize thermal performance. Models are available with a single or dual spring clips for additional thermal interface pressure. Solder anchors are ordered separately.

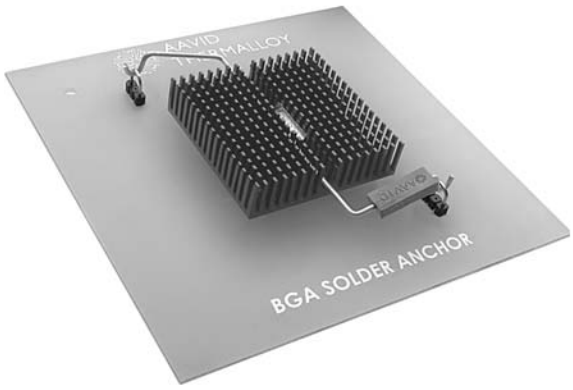

ORDERING INFORMATION

IC Pkg Size (mm)	IC Pkg Style	Part Number	"W" (mm)	"L" (mm)	"H" (mm)	"A" (mm)	θn[1]	θf[2]	Finish	Fig.[4]	PCB Fig.[4]	#Anchors[3]
23 x 23	All	374024B60023G	23.00	23.00	10.00	49.70	40.00	11.69	Black anodize	1	A	2
23 x 23	All	374124B60023G	23.00	23.00	18.00	49.70	23.40	7.39	Black anodize	1	A	2
23 x 23	All	374224B60023G	23.00	23.00	25.00	49.70	19.70	6.37	Black anodize	1	A	2
27 x 27	All	374324B60023G	27.00	27.00	10.00	49.70	30.60	9.35	Black anodize	1	A	2
27 x 27	All	374424B60023G	27.00	27.00	18.00	49.70	20.30	6.46	Black anodize	1	A	2
27 x 27	All	374524B60023G	27.00	27.00	25.00	49.70	16.50	5.47	Black anodize	1	A	2
35 x 35	Flip chip	10-5634-01G	31.00	34.90	23.00		11.50	4.20	Black anodize	2	C	2
35 x 35	Flip chip	10-THMA-01G	31.00	34.90	35.00		10.70	3.95	Black anodize	2	C	2
35 x 35	All	374624B60024G	35.00	35.00	10.00	62.30	23.40	7.55	Black anodize	1	B	2
35 x 35	All	374724B60024G	35.00	35.00	18.00	62.30	15.30	5.15	Black anodize	1	B	2
35 x 35	All	374824B60024G	35.00	35.00	25.00	62.30	12.00	4.27	Black anodize	1	B	2
37.5 x 37.5	Flip chip	10-BRD2-01G	35.70	37.30	23.00		11.50	4.20	Clear anodize	2	B	2
37.5 x 37.5	Flip chip	10-BRD1-01G	37.50	37.50	23.00		10.10	3.83	Black anodize	2	B	2
37.5 x 37.5	Flip chip	10-BRD1-03G	37.50	37.50	23.00		10.10	3.83	Black anodize	3	D	4
37.5 x 37.5	Flip chip	10-BRD1-04G	37.50	37.50	23.00		10.10	3.83	Black anodize	2	B	2
37.5 x 37.5	Flip chip	10-BRD1-05G	37.50	37.50	23.00		10.10	3.83	Clear anodize	3	D	4
37.5 x 37.5	Flip chip	10-BRD1-07G	37.50	37.50	23.00		10.10	3.83	Clear anodize	2	B	2
40 x 40	All	374924B60024G	40.00	40.00	10.00	62.30	20.30	6.46	Black anodize	1	B	2
40 x 40	All	375024B60024G	40.00	40.00	18.00	62.30	12.20	4.34	Black anodize	1	B	2
42 x 40	All	375124B60024G	40.00	40.00	25.00	62.30	10.30	3.83	Black anodize	1	B	2
42.5 x 42.5	Flip chip	10-CLS1-01G	42.30	42.30	23.00		8.80	3.51	Black anodize	2	E	2
42.5 x 42.5	Flip chip	10-CLS2-01G	42.30	42.30	35.00		8.30	3.44	Black anodize	2	E	2

SOLDER ANCHOR

Part Number	PCB Thickness (mm)	"A" Dim (mm)
125700D00000G	1.60	3.61
125800D00000G	2.54-2.79	4.70

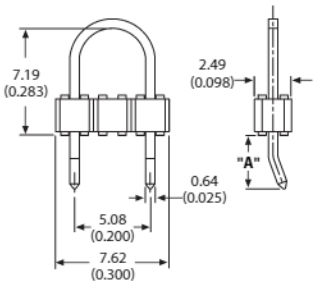

1. Natural convection thermal resistance based on a 75° C heat sink temperature rise.
2. Force convection thermal resistance based on an entering 1.0 m/s (200LFM) airflow.
3. Solder anchors are sold separately refer to drawing above.
4. Solder anchor mechanical drawings and board mounting drawings see page 13.

AAVID THERMALLOY
www.aavidthermalloy.com
AMERICA USA Tel: +1 (603) 224-9988 email: info@aavid.com
EUROPE Italy Tel: +39 051 764011 email: sales.it@aavid.com
United Kingdom Tel: +44 1793 401400 email: sales.uk@aavid.com
ASIA Singapore Tel: +65 6362 8388 email: sales@aavid.com.sg
Taiwan Tel: +886(2) 2698-9888 email: sales@aavid.com.tw

Solder anchor heat sinks mechanical drawings

FIGURE 1

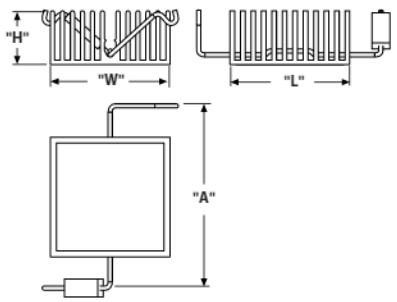

FIGURE 2

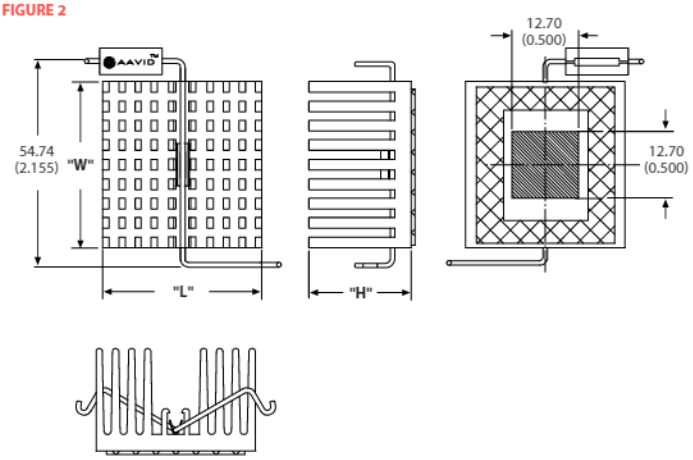

FIGURE 3

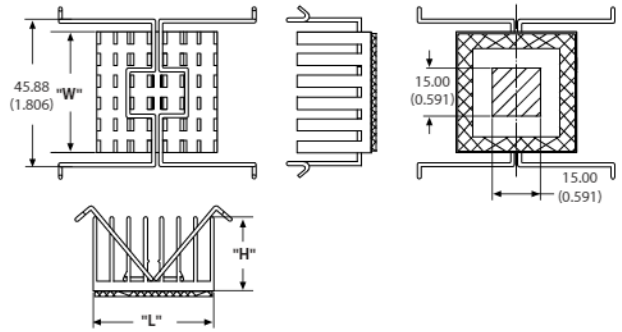

Board mounting pattern information for solder anchor heat sinks

FIGURE A

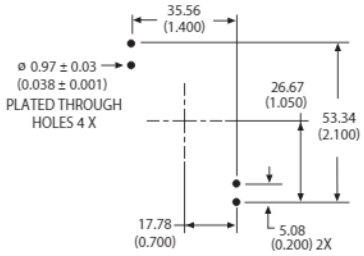

FIGURE B

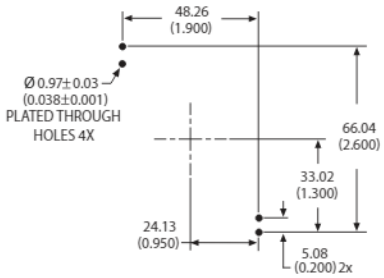

FIGURE C

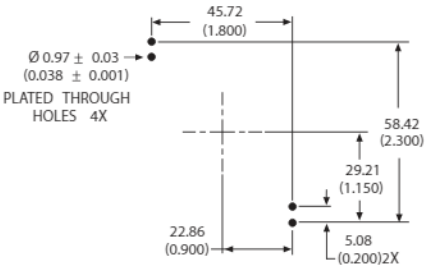

FIGURE D

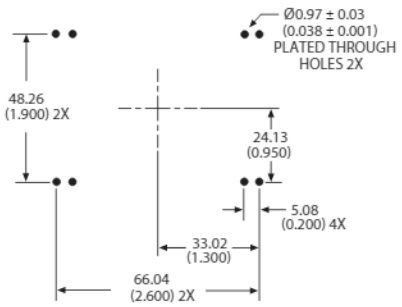

FIGURE E

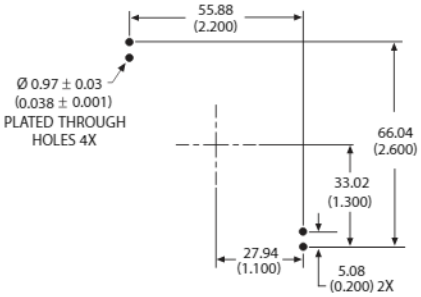

BGA–Push Pin Attachment

Push pin attachment

Push pin heat sinks require two 3.10mm holes in the circuit card to quickly attach the heat sink over the device. The one piece design makes assembly a snap. Pressure is maintained by the tension of the push pin coil springs to ensure even pressure across the device. Push pins provide a greater margin of reliability in applications where gravity or vibration may cause tapes or adhesives to fail. The addition of a phase change pad optimizes thermal performance.

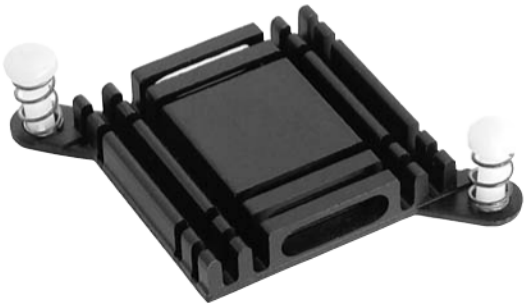

ORDERING INFORMATION

IC Pkg. Size (mm)	Part Number	"W" (mm)	"L" (mm)	"H" (mm)	"S" (mm)	"T" (mm)	θn[2]	θf[3]	Finish	Fig.	PCB Fig.[1]	Pin Style	Pad
28 x 28	10-6326-27G	28.00	28.00	6.00	46.60	6.50	44.10	13.13	Black anodize	1	A	Plastic	Yes
28 x 28	10-6326-28G	28.00	28.00	6.00	46.60	6.50	44.10	13.13	Black anodize	1	A	Brass	Yes
28 x 28	10-6327-01G	28.50	28.50	10.00	46.60	7.00	30.60	9.26	Black anodize	2	A	Plastic	No
35 x 35	10-TNT2-01G	36.10	48.00	11.60		6.50	18.80	6.13	Black anodize	3	D	Plastic	No
37.5 x 37.5	10-5597-02G	37.40	37.40	6.00	59.00	6.50	33.30	9.91	Green anodize	5	B	Plastic	No
37.5 x 37.5	10-5597-22G	37.40	37.40	6.00	59.00	6.50	33.30	9.91	Gold anodize	5	B	Plastic	Yes
37.5 x 37.5	10-5597-33G	37.40	37.40	6.00	59.00	6.50	33.30	9.91	Gold anodize	5	B	Brass	Yes
37.5 x 37.5	10-5607-04G	37.40	37.40	10.00	59.00	7.00	22.10	6.99	Black anodize	5	B	Plastic	Yes
37.5 x 37.5	10-5607-05G	37.40	37.40	10.00	59.00	7.00	22.10	6.99	Black anodize	5	B	Brass	Yes
37.5 x 37.5	372924M02000G	37.40	37.40	6.00	59.00	6.50	32.60	9.91	Green anodize	5	B	Plastic	No
45 x 45	10-L4LB-03G	45.20	41.40	11.89	58.80	8.00	16.70	5.60	Black anodize	4	C	Plastic	Yes
45 x 45	10-L4LB-05G	45.20	41.40	11.89	58.80	8.00	16.70	5.60	Black anodize	4	C	Brass	Yes
45 x 45	10-L4LB-11G	45.20	41.40	11.70	58.80	8.00	14.20	4.91	Black anodize	4	C	Plastic	No

1. Push pin mechanical drawings and board mounting drawings see page 15
2. Natural convection thermal resistance based on a 75° C heat sink temperature rise.
3. Forced convection thermal resistance based on an entering 1.0 m/s (200LFM) airflow.

AAVID THERMALLOY
www.aavidthermalloy.com

AMERICA
USA Tel: +1 (603) 224-9988 email: info@aavid.com

EUROPE
Italy Tel: +39 051 764011 email: sales.it@aavid.com
United Kingdom Tel: +44 1793 401400 email: sales.uk@aavid.com

ASIA
Singapore Tel: +65 6362 8388 email: sales@aavid.com.sg
Taiwan Tel: +886(2) 2698-9888 email: sales@aavid.com.tw

Mechanical drawings

FIGURE 1

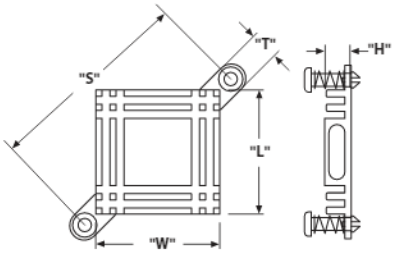

FIGURE 2

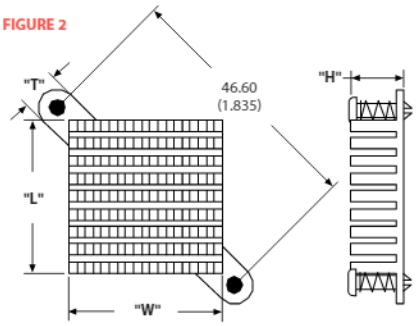

FIGURE 3

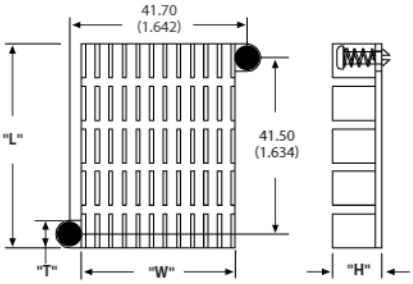

FIGURE 4

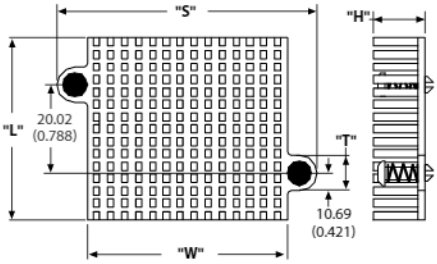

FIGURE 5

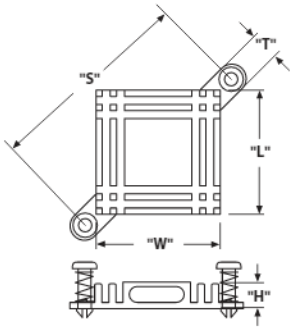

Board mounting pattern information

FIGURE A

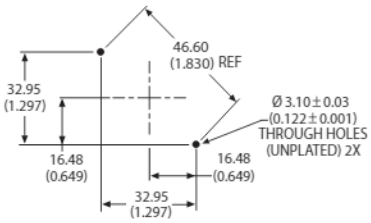

FIGURE B

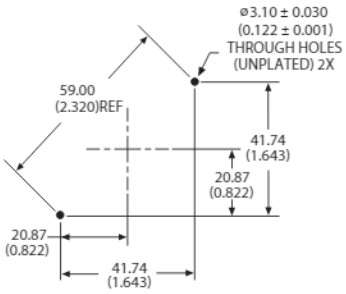

FIGURE C

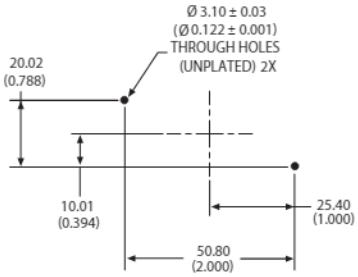

FIGURE D

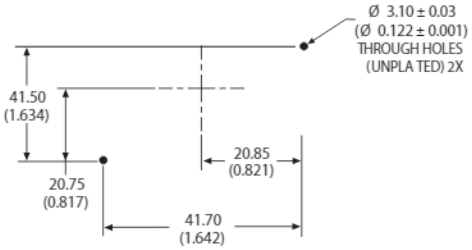

BGA–Tape Attachment

Heat sinks for plastic BGA packages

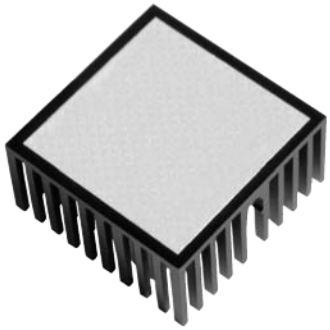

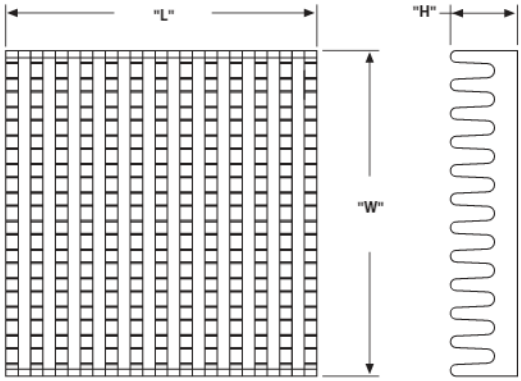

Material: Aluminum

Pressure sensitive, thermally conductive adhesive tape easily and reliably bonds a heat sink to an integrated circuit package. Tapes provide high thermal conductivity and exceptional bonding properties. Adhesives are formulated for plastic and metal/ceramic packages.

ORDERING INFORMATION

IC Pkg. Size (mm)	IC Pkg. Style	Part Number	"W" (mm)	"L" (mm)	"H" (mm)	θn[2]	θf[3]	Finish	Tape code[1]
10 x 10	Plastic	375324B00035G	10.20	10.20	10.20	71.40	21.20	Black anodize	35
15 x 15	Plastic	375424B00034G	15.20	15.20	6.40	62.50	17.60	Black anodize	34
23 x 23	Plastic	374024B00035G	23.00	23.00	10.00	40.00	11.69	Black anodize	35
23 x 23	Plastic	374124B00035G	23.00	23.00	18.00	23.40	7.39	Black anodize	35
23 x 23	Plastic	374224B00035G	23.00	23.00	25.00	19.70	6.370	Black anodize	35
25 x 25	Plastic	335224B00034G	25.00	25.00	9.90	34.00	10.39	Black anodize	34
27 x 27	Plastic	374324B00035G	27.00	27.00	10.00	30.60	9.35	Black anodize	35
27 x 27	Plastic	374424B00035G	27.00	27.00	18.00	20.30	6.46	Black anodize	35
27 x 27	Plastic	374524B00035G	27.00	27.00	25.00	16.50	5.47	Black anodize	35
28 x 28	Plastic	373024B00034G	27.90	27.90	8.90	33.30	10.00	Black anodize	34
28 x 28	Plastic	2327B-CP50G	27.90	28.10	15.20	23.40	7.43	Black anodize	34
31 x 31	Plastic	335824B00034G	30.00	30.00	9.40	29.40	9.11	Black anodize	34
35 x 35	Plastic	371824B00034G	35.00	35.00	7.00	31.90	9.67	Black anodize	34
35 x 35	Plastic	374624B00035G	35.00	35.00	10.00	23.40	7.55	Black anodize	35
35 x 35	Plastic	374724B00035G	35.00	35.00	18.00	15.30	5.15	Black anodize	35
35 x 35	Plastic	374824B00035G	35.00	35.00	25.00	12.00	4.27	Black anodize	35
35 x 35	Plastic	372024B00034G	35.00	35.00	27.90	11.90	4.28	Black anodize	34
40 x 40	Plastic	374924B00035G	40.00	40.00	10.00	20.30	6.46	Black anodize	35
40 x 40	Plastic	364424B00034G	40.10	40.00	11.40	18.40	6.02	Black anodize	34
40 x 40	Plastic	375024B00035G	40.00	40.00	18.00	12.20	4.34	Black anodize	35
40 x 40	Plastic	375124B00035G	40.00	40.00	25.00	10.30	3.83	Black anodize	35

1. For tape specifications see page 88
2. Natural convection thermal resistance based on a 75° C heat sink temperature rise.
3. Forced convection thermal resistance based on an entering 1.0 m/s (200LFM) airflow.

AAVID THERMALLOY
www.aavidthermalloy.com

AMERICA
USA Tel: +1 (603) 224-9988 email: info@aavid.com

EUROPE
Italy Tel: +39 051 764011 email: sales.it@aavid.com
United Kingdom Tel: +44 1793 401400 email: sales.uk@aavid.com

ASIA
Singapore Tel: +65 6362 8388 email: sales@aavid.com.sg
Taiwan Tel: +886(2) 2698-9888 email: sales@aavid.com.tw

Heat sinks for metal/ceramic BGA packages

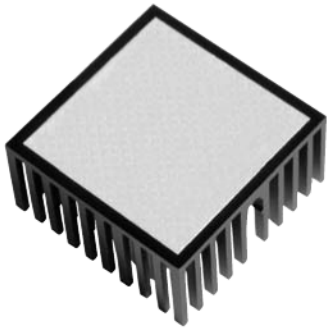

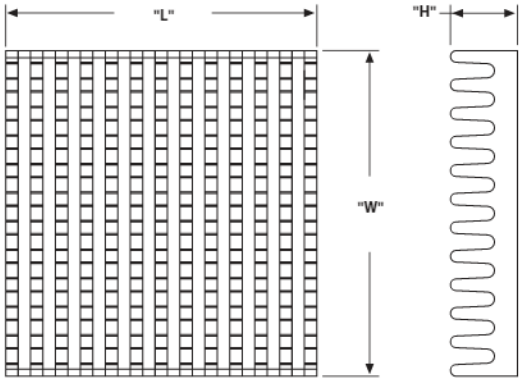

Material: Aluminum

ORDERING INFORMATION

IC Pkg. Size (mm)	IC Pkg. Style	Part Number	"W" (mm)	"L" (mm)	"H" (mm)	θn[2]	θf[3]	Finish	Tape Code[1]
10 x 10	Metal / Ceramic	375224B00032G	10.20	11.10	10.20	71.40	21.20	Black anodize	32
23 x 23	Metal / Ceramic	374024B00032G	23.00	23.00	10.00	40.00	11.69	Black anodize	32
23 x 23	Metal / Ceramic	374124B00032G	23.00	23.00	18.00	23.40	7.39	Black anodize	32
23 x 23	Metal / Ceramic	374224B00032G	23.00	23.00	25.00	19.70	6.370	Black anodize	32
25 x 25	Metal / Ceramic	335224B00032G	25.00	25.00	9.90	34.00	10.39	Black anodize	32
27 x 27	Metal / Ceramic	335324B00032G	26.90	26.90	11.40	27.70	8.71	Black anodize	32
27 x 27	Metal / Ceramic	374324B00032G	27.00	27.00	10.00	30.60	9.35	Black anodize	32
27 x 27	Metal / Ceramic	374424B00032G	27.00	27.00	18.00	20.30	6.46	Black anodize	32
27 x 27	Metal / Ceramic	374524B00032G	27.00	27.00	25.00	16.50	5.47	Black anodize	32
28 x 28	Metal / Ceramic	373024B00032G	27.90	27.90	8.89	33.30	10.00	Black anodize	32
28 x 28	Metal / Ceramic	373224M00032G	28.00	28.00	6.00	44.10	13.13	Green anodize	32
28 x 28	Metal / Ceramic	2327B-TACHG	27.90	28.10	15.20	23.40	7.43	Black anodize	32
31 x 31	Metal / Ceramic	335724B00032G	30.10	30.10	6.60	35.70	10.84	Black anodize	32
31 x 31	Metal / Ceramic	335824B00032G	30.00	30.00	9.40	29.40	9.11	Black anodize	32
32.5 x 32.5	Metal / Ceramic	2338B-TACHG	33.00	31.40	12.50	23.10	7.23	Black anodize	32
35 x 35	Metal / Ceramic	371824B00032G	35.00	35.00	7.00	31.90	9.67	Black anodize	32
35 x 35	Metal / Ceramic	374624B00032G	35.00	35.00	10.00	23.40	7.55	Black anodize	32
35 x 35	Metal / Ceramic	374724B00032G	35.00	35.00	18.00	15.30	5.15	Black anodize	32
35 x 35	Metal / Ceramic	374824B00032G	35.00	35.00	25.00	12.00	4.27	Black anodize	32
35 x 35	Metal / Ceramic	372024B00032G	35.00	35.00	27.90	11.90	4.28	Black anodize	32
37.5 x 37.5	Metal / Ceramic	373324M00032G	37.40	37.40	6.00	32.60	9.91	Green anodize	32
37.5 x 37.5	Metal / Ceramic	2319B-TACHG	38.10	38.10	10.16	12.50	3.50	Black anodize	32
37.5 x 37.5	Metal / Ceramic	336624B00032G	38.10	38.10	16.00	15.30	5.15	Black anodize	32
40 x 40	Metal / Ceramic	374924B00032G	40.00	40.00	10.00	20.30	6.46	Black anodize	32
40 x 40	Metal / Ceramic	364424B00032G	40.10	40.00	11.40	18.40	6.02	Black anodize	32
40 x 40	Metal / Ceramic	375024B00032G	40.00	40.00	18.00	12.20	4.34	Black anodize	32
40 x 40	Metal / Ceramic	375124B00032G	40.00	40.00	25.00	10.30	3.83	Black anodize	32
42.5 x 42.5	Metal / Ceramic	2321B-TACHG	43.20	41.30	8.90	22.10	6.93	Black anodize	32
42.5 x 42.5	Metal / Ceramic	2332B-TACHG	43.20	41.30	16.50	12.90	4.53	Black anodize	32
45 x 45	Metal / Ceramic	2342B-TACHG	45.70	44.60	7.00	23.10	7.26	Black anodize	32
50 +	Metal / Ceramic	3334B-TACHG	50.50	50.20	16.50	6.0	3.3	Black anodize	32

1. For tape specifications see page 88
2. Natural convection thermal resistance based on a 75° C heat sink temperature rise.
3. Forced convection thermal resistance based on an entering 1.0 m/s (200LFM) airflow.

BGA–Clip Attachment

Clip attachment

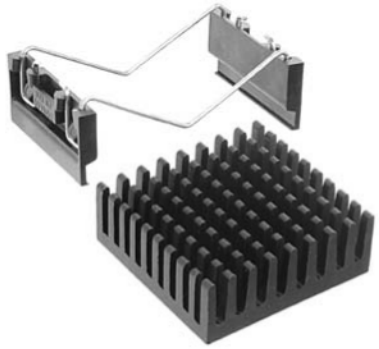

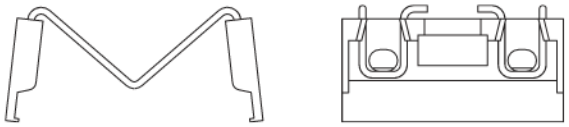

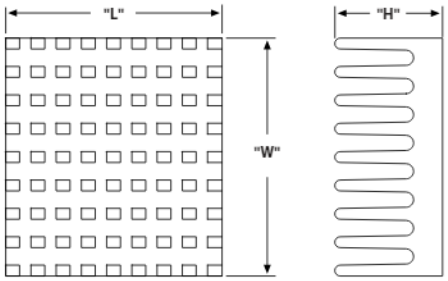

Aavid's BGS Clip heat sinks provide a mechanical attachment alternative to tape applications where it is desirable to attach the heat sink directly to the device. The unique clip uses spring pressure to ensure even contact across the device while the end plates firmly engage the edge of the package, locking the heat sink in place. Each heat sink uses pre-applied thermal grease for optimum thermal performance.

Material: Aluminum
Finish: Black Anodize

ORDERING INFORMATION

IC Pkg. Size (mm)	Part Number	"W" (mm)	"L" (mm)	"H" (mm)	IC Pkg. Style	θn[1]	θf[2]	Interface	Clip
27 x 27	2317B-EP11-BGS1G	26.14	20.47	15.24	All	32.60	9.94	EP11	BGS1
35 x 35	2518B-EP11-BGS2G	30.50	28.10	15.60	All	22.70	7.05	EP11	BGS2
42.5 x 42.5	2519B-EP11-BGS5G	34.50	31.40	15.60	All	19.70	6.30	EP11	BGS5
42.5 x 42.5	2520B-EP04-BGS5G	38.10	38.00	15.60	All	15.60	5.17	EP04	BGS5
42.5 x 42.5	2522B-EP04-BGS5G	38.10	38.00	10.16	All	22.10	6.94	EP04	BGS5

1. Natural convection thermal resistance based on a 75° C heat sink temperature rise.
2. Forced convection thermal resistance based on an entering 1.0 m/s (200LFM) airflow.

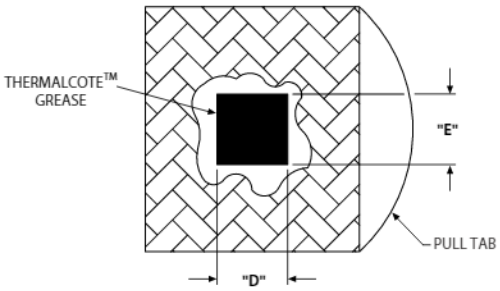

TAPE TYPE AND INTERFACE MATERIAL INFORMATION

Material	Description	Adhesive	Thermal Resistance	Color	Carrier	"D" Dim	"E" Dim
EP11	Thermalcote™ grease with release liner	None	0.18	White	None	13.34 (0.525)	13.34 (0.525)
EP04	Thermalcote™ grease with release liner	None	0.03	White	None	31.75 (1.250)	31.75 (1.250)

For more information on Thermalcote™ see page 113.

AAVID THERMALLOY
www.aavidthermalloy.com

AMERICA
USA Tel: +1 (603) 224-9988 email: info@aavid.com

EUROPE
Italy Tel: +39 051 764011 email: sales.it@aavid.com
United Kingdom Tel: +44 1793 401400 email: sales.uk@aavid.com

ASIA
Singapore Tel: +65 6362 8388 email: sales@aavid.com.sg
Taiwan Tel: +886(2) 2698-9888 email: sales@aavid.com.tw

Bi Directional

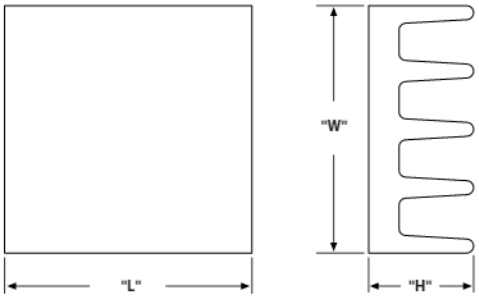

Material: Aluminum

Designed for applications with airflow traveling in a single direction, these heat sinks are suitable for a variety of standard square IC packages. Models are available with pre-applied thermal tape for easy attachment to the IC. Epoxy attach models are also available.

ORDERING INFORMATION

IC Pkg Size	IC Pkg Style	Part Number	"W" (mm)	"L" (mm)	"H" (mm)	θn[3]	θf[4]	Finish	Attachment	Tape Code [2]
10 X 10	All	615653B00250G	6.00	6.00	5.00	142.58	76.26	Black anodize	Epoxy[1]	N/A
10 X 10	All	709203B00400G	10.00	10.00	10.00	55.98	29.94	Black anodize	Epoxy[1]	N/A
24 X 24	Metal	335114B00032G	24.00	24.00	24.00	13.60	7.27	Black anodize	Tape	32
25 X 25	Metal	335214B00032G	25.00	25.00	10.00	10.00	5.35	Black anodize	Tape	32
25 X 25	Metal	335211B00032G	25.00	25.00	10.00	10.00	5.35	Black anodize	Tape	32
25 X 25	All	335214B00000G	25.00	25.00	10.00	10.00	5.35	Black anodize	Epoxy[1]	N/A
25 X 25	All	335211B00000G	25.00	25.00	10.00	10.00	5.35	Black anodize	Epoxy[1]	N/A
25 X 25	Plastic	335214B00034G	25.00	25.00	10.00	10.00	5.35	Black anodize	Tape	34
27 X 27	Plastic	335314B00035G	27.00	27.00	11.00	10.00	5.35	Black anodize	Tape	35
27 X 27	Metal	335314B00032G	27.00	27.00	11.00	10.00	5.35	Black anodize	Tape	32
27 X 27	All	335314B00000G	27.00	27.00	11.00	10.00	5.35	Black anodize	Epoxy[1]	N/A
28 X 28	All	700353U01100G	28.00	28.00	9.00	18.49	9.89	Unfinished	Epoxy[1]	N/A
30 X 30	All	335814B00000G	30.00	30.00	9.00	10.50	5.61	Black anodize	Epoxy[1]	N/A
30 X 30	All	335714B00000G	30.00	30.00	7.00	15.20	8.13	Black anodize	Epoxy[1]	N/A
30 X 30	Metal	335814B00032G	30.00	30.00	9.00	9.20	4.92	Black anodize	Tape	32
30 X 30	Metal	335714B00032G	30.00	30.00	7.00	15.20	8.13	Black anodize	Tape	32
37.5 X 37.5	All	799403B01500G	38.00	38.00	10.00	12.21	6.53	Black anodize	Epoxy[1]	N/A
37.5 X 37.5	All	336314B00000G	36.00	36.00	17.00	11.00	5.88	Black anodize	Epoxy[1]	N/A

1. Epoxy ordered separately for information on Epoxy see page 114,115.
2. For tape specifications see page 88.
3. Natural convection thermal resistance based on a 75°C heat sink temperature rise.
4. Forced convection thermal resistance based on an entering 1.0 m/s (200LFM) airflow.

5801 Slide on heat sink with staggered fins

Slide on heat sink with staggered fins attaches to 8 pin DIP packages quickly and easily. The heat sink features double spring action and locking catch to firmly attach the device creating a thermal conduction path on both the top and bottom surfaces. Available in two finishes.

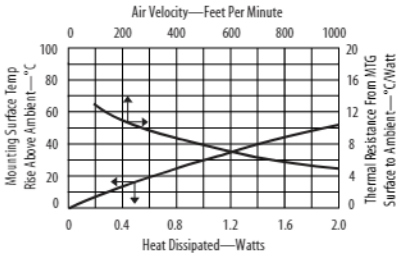

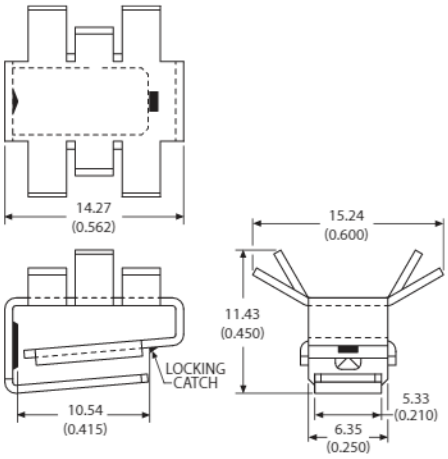

Material: 0.63 (0.025) Thick Aluminum
Finish: See Table

ORDERING INFORMATION

Part Number	Finish
580100B00000G	Black anodize
580100W00000G	Black anodize with black paint on bottom side

5010 Angle fin heat sink

Grease & Epoxy page112

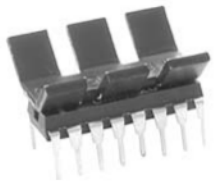

Angle fin heat sink is a simple low cost solution for cooling DIP devices. Suitable for 14 and 16 pin packages and available in two finish options. Easily attaches using thermal epoxy.

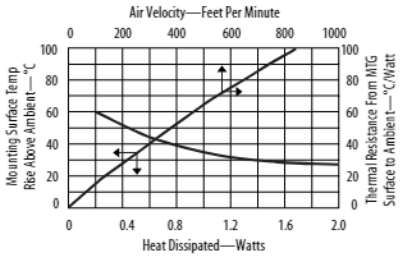

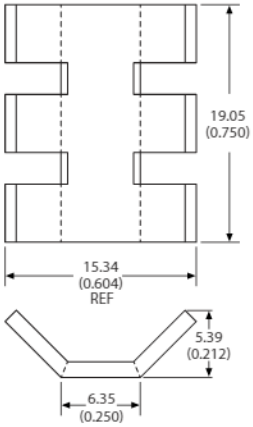

Material: 1.27 (0.050) Thick Aluminum
Finish: See Table

ORDERING INFORMATION

Part Number	Finish
501000J00000G	Pre black anodize*
501000B00000G	Black anodize

* Edges cut during the manufacturing process will be unfinished.
See page 110 for more information.

5602, 5802 Slide on heat sink with angled fins

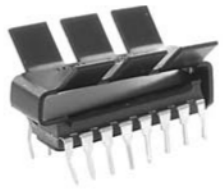

Slide on heat sink with angled fins attaches to 14 and 16 pin DIP packages quickly and easily. The heat sink features double spring action and locking catch to firmly attach the device creating a thermal conduction path on both the top and bottom surfaces. Available in two finishes.

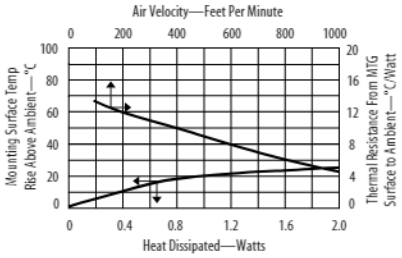

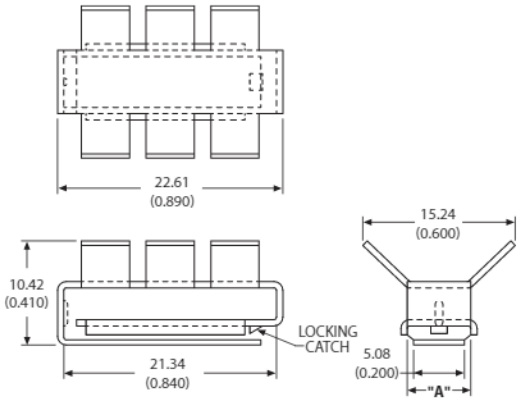

Material: 0.63 (0.025) Thick Aluminum
Finish: See Table

ORDERING INFORMATION

Part Number	Device Pkg Style	Finish	"A" Dim
560200B00000G	Ceramic	Black anodize	7.87 (0.310)
560200W00000G	Ceramic	Black anodize with black paint on bottom side	7.87 (0.310)
580200B00000G	Plastic	Black anodize	6.35 (0.250)
580200W00000G	Plastic	Black anodize with black paint on bottom side	6.35 (0.250)

AAVID THERMALLOY
www.aavidthermalloy.com
AMERICA USA Tel: +1 (603) 224-9988 email: info@aavid.com
EUROPE Italy Tel: +39 051 764011 email: sales.it@aavid.com
United Kingdom Tel: +44 1793 401400 email: sales.uk@aavid.com
ASIA Singapore Tel: +65 6362 8388 email: sales@aavid.com.sg
Taiwan Tel: +886(2) 2698-9888 email: sales@aavid.com.tw

5806 Slide on heat sink with staggered fins

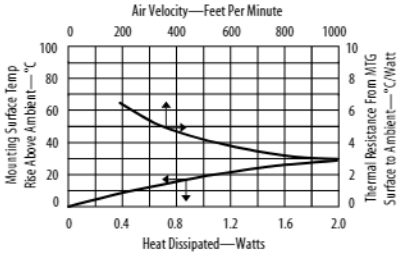

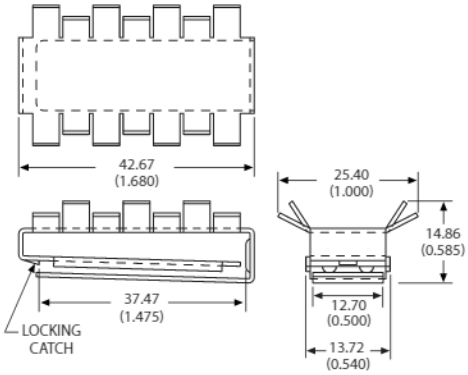

Slide on heat sink with staggered fins attaches to 28 pin DIP packages quickly and easily. The heat sink features double spring action and locking catch to firmly attach the device creating a thermal conduction path on both the top and bottom surfaces.

Material: 0.81 (0.032) Thick Aluminum
Finish: Black Anodize

ORDERING INFORMATION

Part Number	Description
580600B00000G	Slide on heat sink with staggered fins

5803 Slide on heat sink with staggered fins

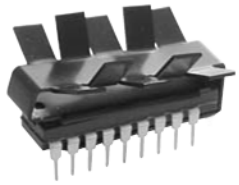

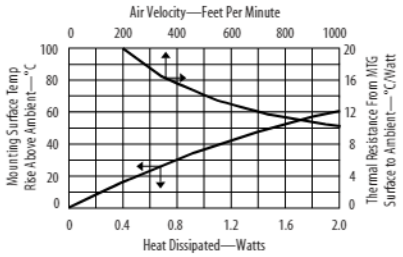

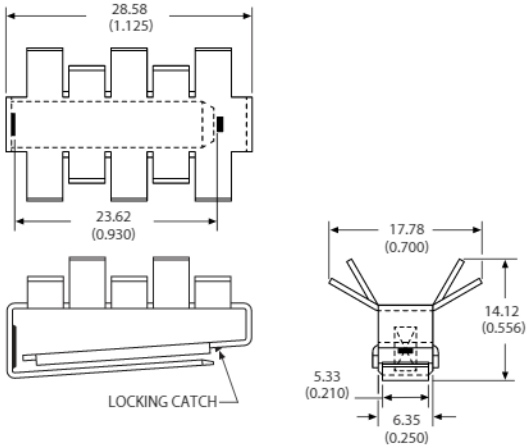

Slide on heat sink with staggered fins attaches to 18 pin DIP packages quickly and easily. The heat sink features double spring action and locking catch to firmly attach the device creating a thermal conduction path on both the top and bottom surfaces.

Material: 0.63 (0.025) Thick Aluminum
Finish: Black Anodize

ORDERING INFORMATION

Part Number	Description
580300B00000G	Slide on heat sink with staggered fins

5804 Slide on heat sink with staggered fins

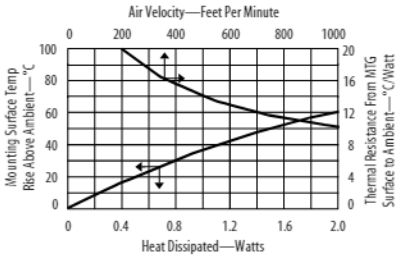

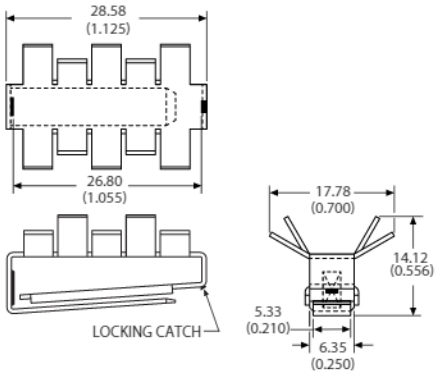

Material: 0.63 (0.025) Thick Aluminum
Finish: Black Anodize

Slide on heat sink with staggered fins attaches to 20 pin DIP packages quickly and easily. The heat sink features double spring action and locking catch to firmly attach the device creating a thermal conduction path on both the top and bottom surfaces.

ORDERING INFORMATION

Part Number	Description
580400B00000G	Slide on heat sink with staggered fins

5805 Slide on heat sink with staggered fins

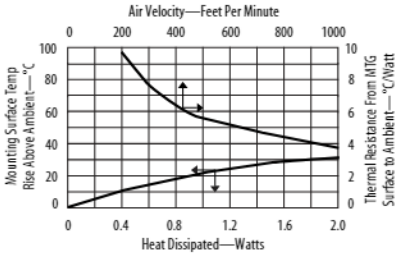

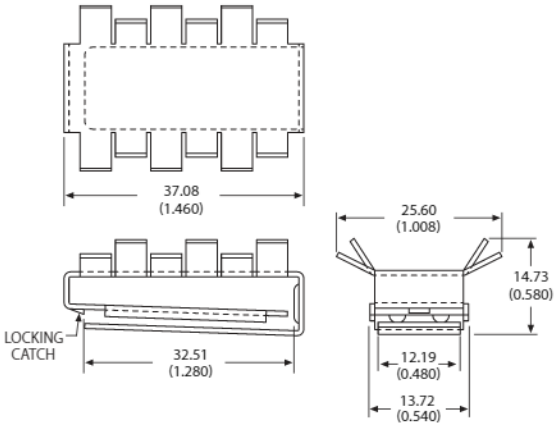

Material: 0.81 (0.032) Thick Aluminum
Finish: Black Anodize

Slide on heat sink with staggered fins attaches to 24 pin DIP packages quickly and easily. The heat sink features double spring action and locking catch to firmly attach the device creating a thermal conduction path on both the top and bottom surfaces.

ORDERING INFORMATION

Part Number	Description
580500B00000G	Slide on heat sink with staggered fins

AAVID THERMALLOY
www.aavidthermalloy.com

AMERICA
USA Tel: +1 (603) 224-9988 email: info@aavid.com

EUROPE
Italy Tel: +39 051 764011 email: sales.it@aavid.com
United Kingdom Tel: +44 1793 401400 email: sales.uk@aavid.com

ASIA
Singapore Tel: +65 6362 8388 email: sales@aavid.com.sg
Taiwan Tel: +886(2) 2698-9888 email: sales@aavid.com.tw

5085, 5086, 5087 Extruded epoxy attach on heat sink with straight fins

Grease & Epoxy page112

Extruded epoxy attach on heat sink with straight fins attaches to 24, 28, and 40 pin DIP packages quickly and easily. May be added before or after final board assembly. No additional board space is required.

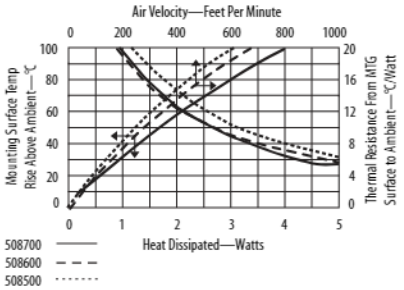

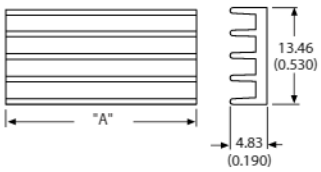

Material: Aluminum
Finish: Black Anodize

ORDERING INFORMATION

Part Number	DIP Package	"A" Dim
508500B00000G	24 pin	31.75 (1.250)
508600B00000G	28 pin	36.83 (1.450)
508700B00000G	40 pin	50.80 (2.000)

For epoxy information see pages 114-115.

6284 Extruded epoxy attach heat sink

Grease & Epoxy page112

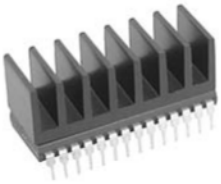

Extruded epoxy attach heat sink which requires no additional board space is suitable for narrow DIP packages. May be added before or after final board assembly. No additional board space is required. Attaches to 28 pin DIP.

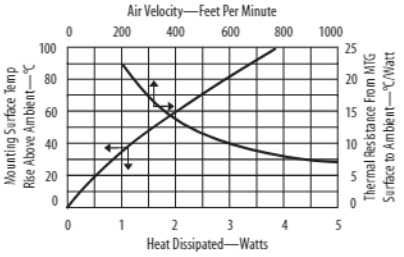

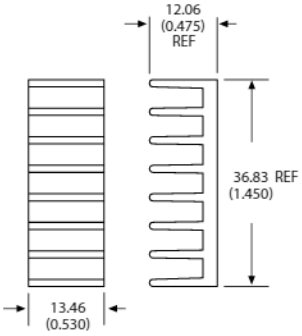

Material: Aluminum
Finish: Black Anodize

ORDERING INFORMATION

Part Number	Description
6284BG	Extruded epoxy attach heat sink for 28 pin DIP

For epoxy information see pages 114-115.

5011, 5012 Extruded epoxy attach heat sink with straight fins

Grease & Epoxy page112

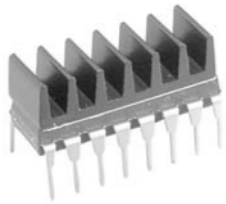

Extruded epoxy attach heat sink with straight fins attaches to 14 and 16 pin DIP packages quickly and easily. May be added before or after final board assembly. No additional board space is required. Available in two fin directions.

FIGURE A

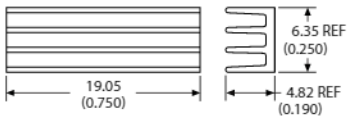

FIGURE B

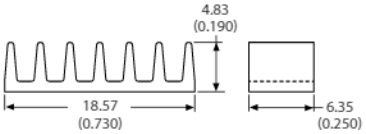

Material: Aluminum
Finish: Black Anodize

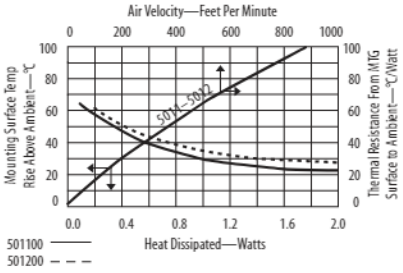

ORDERING INFORMATION

Part Number	Description	Figure
501100B00000G	Extruded epoxy attach heat sink with straight fins	A
501200B00000G	Extruded epoxy attach heat sink with straight fins	B

For epoxy information see pages 114-115.

5731 Surface mount heat sink for D-PAK (TO-252) package semiconductors

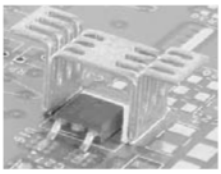

Surface mount heat sink for D-PAK (TO-252) package semiconductors remove the heat indirectly without contacting the device like traditional through hole heat sinks. The device and the heat sink are soldered directly to a modified drain pad creating a thermal transfer path from package tab to the heat sink.

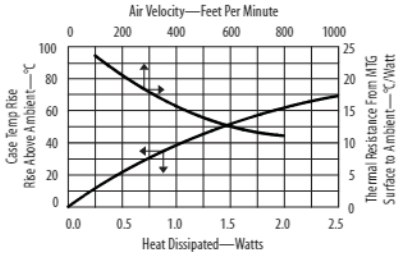

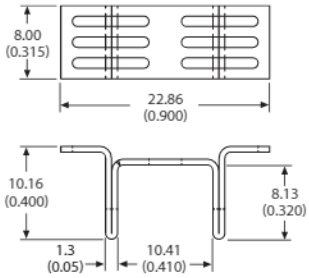

Material: 0.63 (0.025) Thick Copper
Finish: Tin Plated

Refer to Figure A and B on page 26 for board footprint information

ORDERING INFORMATION

Part Number	Packaging
573100D00010G	13" Reel, 250 per reel
573100D00000G	Bulk, 500 per bag

See page 25 for tape and reel information

5733 Surface mount heat sink for D²PAK (TO-263) package semiconductors

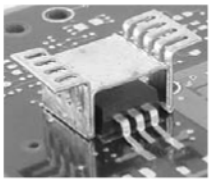

Surface mount heat sink for D²PAK (TO-263) package semiconductors remove the heat indirectly without contacting the device like traditional through hole heat sinks. The device and the heat sink are soldered directly to a modified drain pad creating a thermal transfer path from package tab to the heat sink.

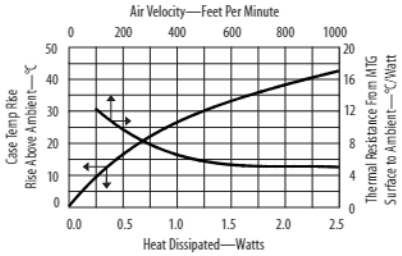

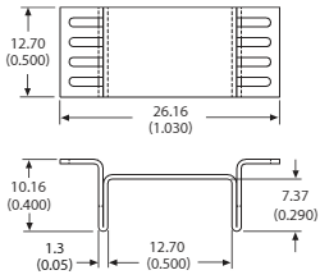

Material: 0.63 (0.025) Thick Copper
Finish: Tin Plated

Refer to Figure A and B on page 26 for board footprint information

ORDERING INFORMATION

Part Number	Packaging
573300D00010G	13" Reel, 250 per reel
573300D00000G	Bulk, 500 per bag

See page 25 for tape and reel information

7106 Surface mount heat sink for D²PAK (TO-263), power SO-10 (MO-184) and SO-10 package semiconductors

Surface mount heat sink for D²PAK (TO-263), power SO-10 (MO-184) and SO-10 package semiconductors remove the heat indirectly without contacting the device like traditional through hole heat sinks. The device and the heat sink are soldered directly to a modified drain pad creating a thermal transfer path from package tab to the heat sink.

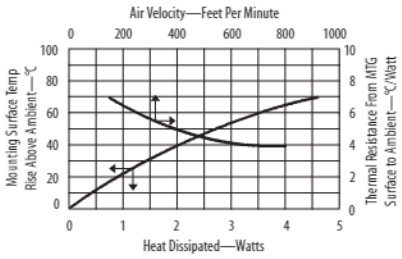

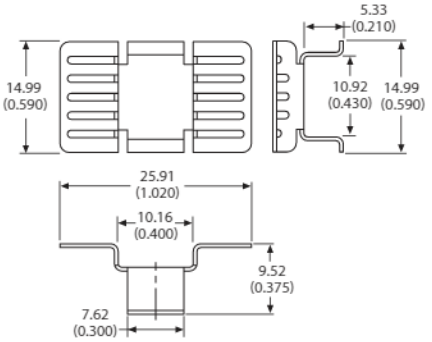

Material: 0.63 (0.025) Thick Copper
Finish: Tin Plated

Refer to Figure C on page 26 for board footprint information

ORDERING INFORMATION

Part Number	Packaging
7106D/TRG	13" Reel, 200 per reel
7106DG	Bulk, 500 per bag

See page 25 for tape and reel information

AAVID THERMALLOY
www.aavidthermalloy.com

AMERICA
USA Tel: +1 (603) 224-9988 email: info@aavid.com

EUROPE
Italy Tel: +39 051 764011 email: sales.it@aavid.com
United Kingdom Tel: +44 1793 401400 email: sales.uk@aavid.com

ASIA
Singapore Tel: +65 6362 8388 email: sales@aavid.com.sg
Taiwan Tel: +886(2) 2698-9888 email: sales@aavid.com.tw

7109 Surface mount heat sink for D²PAK (TO-263) package semiconductors

Surface mount heat sink for D²PAK (TO-263) package semiconductors remove the heat indirectly without contacting the device like traditional through hole heat sinks. The device and the heat sink are soldered directly to a modified drain pad creating a thermal transfer path from package tab to the heat sink.

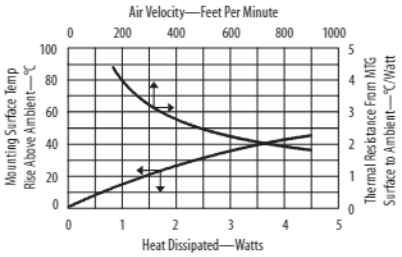

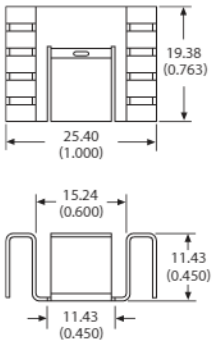

Refer to Figure D on page 26 for board footprint information

Material: 0.63 (0.025) Thick Copper
Finish: Tin Plated

ORDERING INFORMATION

Part Number	Packaging
7109D/TRG	13" Reel, 125 per reel
7109DG	Bulk, 500 per bag

See below for tape and reel information

5734 Surface mount heat sink for D³PAK (TO-268) package semiconductors

Surface mount heat sink for D³PAK (TO-268) package semiconductors remove the heat indirectly without contacting the device like traditional through hole heat sinks. The device and the heat sink are soldered directly to a modified drain pad creating a thermal transfer path from package tab to the heat sink.

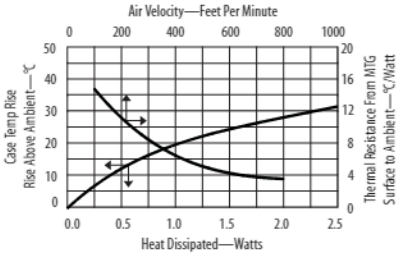

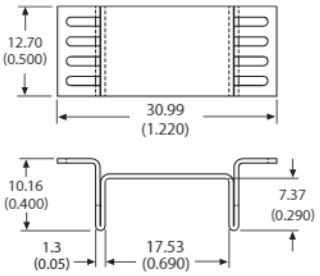

Refer to Figure A and B on page 26 for board footprint information

Material: 0.63 (0.025) Thick Copper
Finish: Tin Plated

ORDERING INFORMATION

Part Number	Packaging
573400D00010G	13" Reel, 250 per reel
573400D00000G	Bulk, 500 per bag

See below for tape and reel information

Tape and Reel information

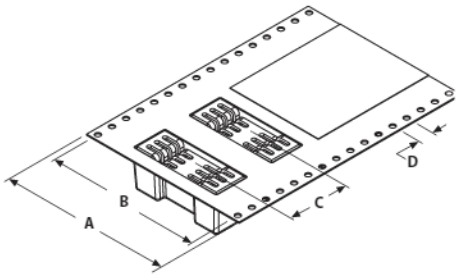

ORDERING INFORMATION

Part Number	"A" Dim	"B" Dim	"C" Dim	"D" Dim
7106D/TRG	44.00 (1.730)	40.40 (1.590)	24.00 (0.940)	4.06 (0.160)
7109D/TRG	44.00 (1.730)	40.40 (1.590)	36.00 (1.420)	4.06 (0.160)
573100D00010G	44.00 (1.730)	40.40 (1.590)	16.00 (0.630)	4.06 (0.160)
573300D00010G	44.00 (1.730)	40.40 (1.590)	24.00 (0.940)	4.06 (0.160)
573400D00010G	44.00 (1.730)	40.40 (1.590)	24.00 (0.940)	4.06 (0.160)

SMT Footprints

FIGURE A

Recommended copper heat speader drain pad footprint

Note: The thickness of the drain pad is variable depending on the amount of heat generated by the SMT device, design limitations and process.

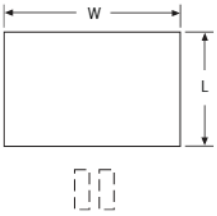

Part Number	"L"	"W"
573100	9.53 (0.375)	13.97 (0.550)
573300	14.22 (0.560)	16.26 (0.640)
573400	14.22 (0.560)	21.08 (0.830)

FIGURE B

Recommended heat sink solder mask opening

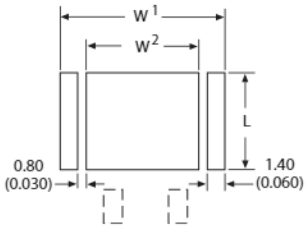

Part Number	"L"	"W1"	"W2"
573100	9.02 (0.355)	13.46 (0.530)	8.89 (0.350)
573300	13.72 (0.540)	15.75 (0.620)	11.18 (0.440)
573400	13.72 (0.540)	20.57 (0.810)	16.00 (0.630)

FIGURE C

Recommended copper pad size
for heat sink and device mounting footprint

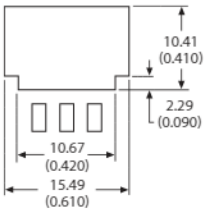

For D Pak (TO-263)

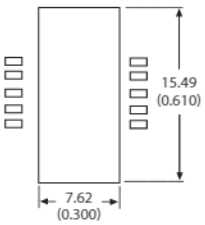

For MO-184 and SO-10

FIGURE D

Recommended copper pad size
for heat sink and device mounting footprint

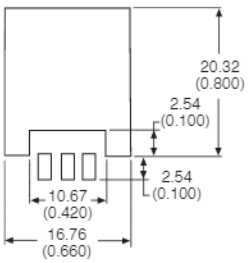

AAVID THERMALLOY
www.aavidthermalloy.com

AMERICA
USA Tel: +1 (603) 224-9988 email: info@aavid.com

EUROPE
Italy Tel: +39 051 764011 email: sales.it@aavid.com
United Kingdom Tel: +44 1793 401400 email: sales.uk@aavid.com

ASIA
Singapore Tel: +65 6362 8388 email: sales@aavid.com.sg
Taiwan Tel: +886(2) 2698-9888 email: sales@aavid.com.tw

7025 Channel style heat sink with folded back fins

Grease & Epoxy page112 | Mounting Kits page 99

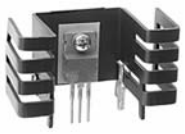

Channel style heat sink with folded back fins for increased cooling surface area. Available with tin plated solderable tabs for easy attachment to the printed circuit card.

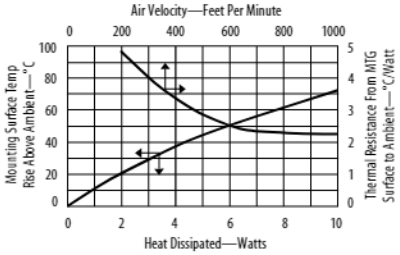

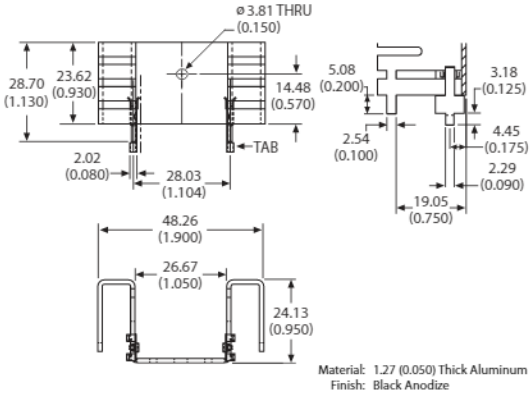

ORDERING INFORMATION

Part Number	Description	Dia of PCB Plated Thru Hole for Tabs
7025BG	Channel heat sink with no solderable tabs	
7025B-MTG	With solderable mounting tabs	2.90 (0.114)

For additional options see page 85

7019 Narrow channel style heat sink with folded back fins

Grease & Epoxy page112 | Mounting Kits page 99

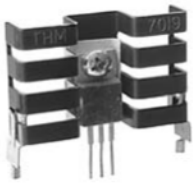

Narrow channel style heat sink with folded back fins for increased cooling surface area. Available with tin plated solderable tabs for easy attachment to the printed circuit card.

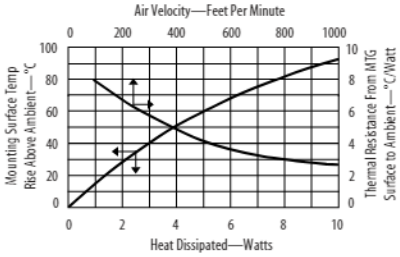

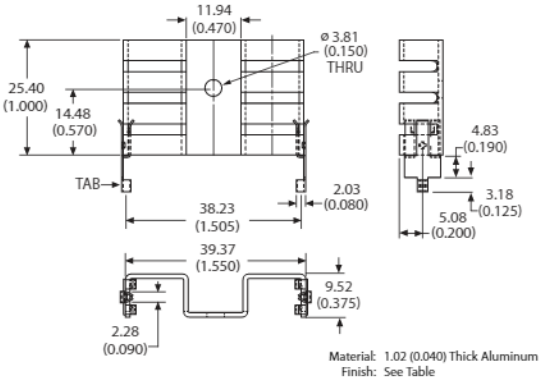

ORDERING INFORMATION

Part Number	Description	Finish	Dia of PCB Plated Thru Hole for Tabs
7019BG	Channel heat sink with no solderable tabs	Black anodize	
7019PBG	Channel heat sink with no solderable tabs	Pre black anodize*	
7019B-MTG	With solderable tabs	Black anodize	2.90 (0.114)

*Edges cut during the manufacturing process will be unfinished.
See page 110 for more information

For additional options see page 85

7020 Narrow channel style heat sink with folded back fins

Grease & Epoxy page112 | Mounting Kits page 99

Narrow channel style heat sink with folded back fins for increased cooling surface area. Available with tin plated solderable tabs for easy attachment to the printed circuit card.

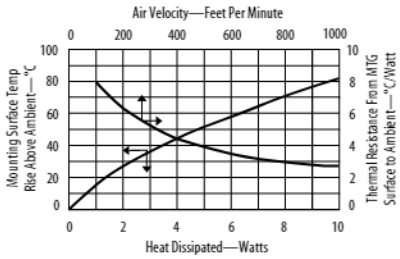

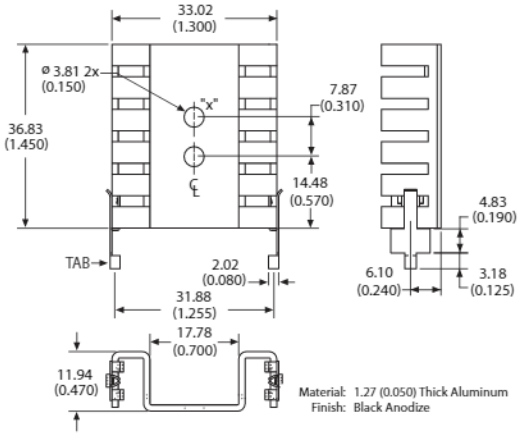

ORDERING INFORMATION

Part Number	Description	Dia of PCB Plated Thru Hole for Tabs
7020BG	Narrow channel heat sink with no solderable tabs	
7020B-MTG	With solderable tabs	2.90 (0.114)

POPULAR OPTIONS: 7020B- ____ G
Base part no. A

Position	Code	Description	Location	Details
A	TC10-MT	Insulating device mounting clip and solderable tabs	Hole X	Page 93, 98

For additional options see page 85

TO-220 Heat Sinks

7021 Channel style heat sink with folded back fins

Grease & Epoxy page112
Mounting Kits page 99

Channel style heat sink with folded back fins for increased cooling surface area. Available with tin plated solderable tabs for easy attachment to the printed circuit card.

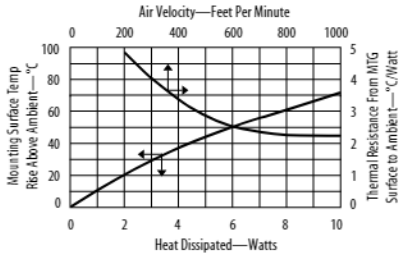

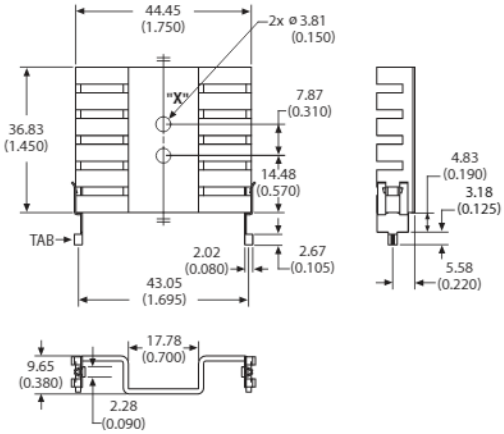

Material: 1.27 (0.050) Thick Aluminum
Finish: Black Anodize

ORDERING INFORMATION

Part Number	Description	Dia of PCB Plated Thru Hole for Tabs
7021BG	Channel heat sink with no solderable tabs	
7021B-MTG	With solderable tabs	2.90 (0.114)

POPULAR OPTIONS: 7021B- ____ G

Base part no. A

Position	Code	Description	Location	Details
A	TC10-MT	Locking device mounting clip and solderable tabs	Hole X	Page 93, 98
A	MT5	Bifurcated tabs with 0.205 stand off		Page 93
A	MT6	Bifurcated tabs with 0.115 stand off		Page 93
A	TC10-MT5	Locking device mounting clip and bifurcated tabs	Hole X	Page 93, 98

For additional options see page 85

7023 Channel style heat sink with folded back fins

Grease & Epoxy page112
Mounting Kits page 99

Channel style heat sink with folded back fins for increased cooling surface area. Available with tin plated solderable tabs for easy attachment to the printed circuit card.

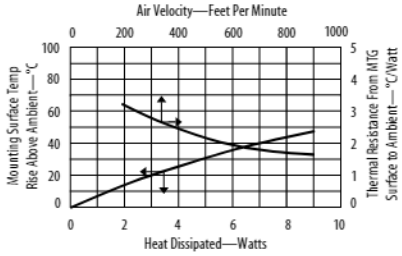

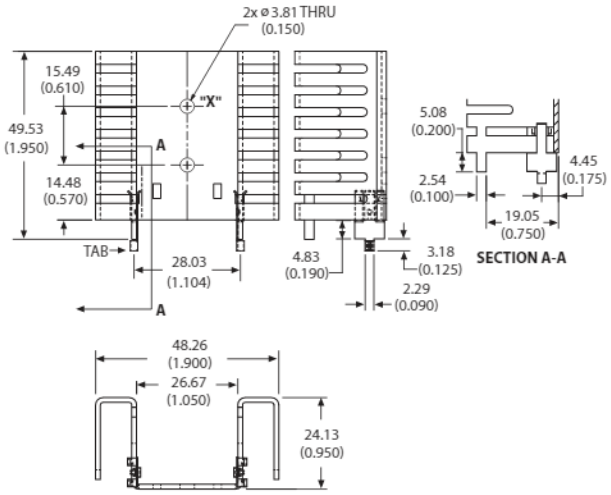

Material: 1.27 (0.050) Thick Aluminum
Finish: Black Anodize

ORDERING INFORMATION

Part Number	Description	Dia of PCB Plated Thru Hole for Tabs
7023BG	Channel heat sink with no solderable tabs	
7023B-MTG	With solderable tabs	2.90 (0.114)

POPULAR OPTIONS: 7023B- ____ G

Base part no. A

Position	Code	Description	Location	Details
A	TC6-MT	Locking device mounting clip and solderable tabs	Hole X	Page 93, 98
A	TC7-MT	Insulating device mounting clip and solderable tabs	Hole X	Page93, 98

For additional options see page 85

AAVID THERMALLOY
www.aavidthermalloy.com

AMERICA
USA Tel: +1 (603) 224-9988 email: info@aavid.com

EUROPE
Italy Tel: +39 051 764011 email: sales.it@aavid.com
United Kingdom Tel: +44 1793 401400 email: sales.uk@aavid.com

ASIA
Singapore Tel: +65 6362 8388 email: sales@aavid.com.sg
Taiwan Tel: +886(2) 2698-9888 email: sales@aavid.com.tw

7022 Channel style heat sink with folded back fins

Grease & Epoxy page112

Mounting Kits page 99

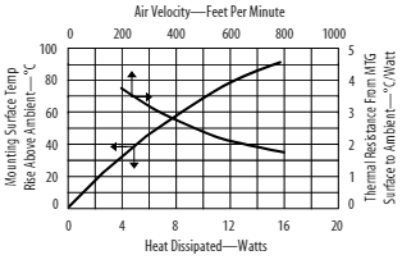

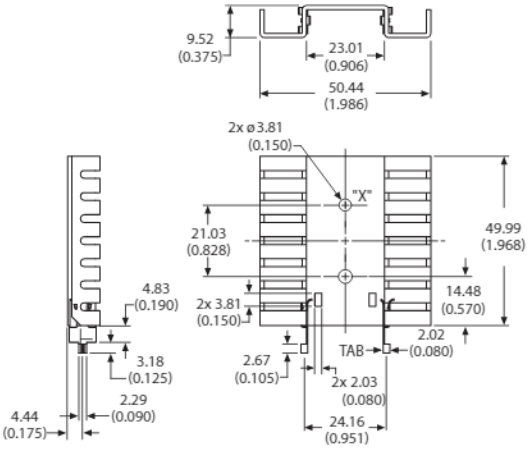

Material: 1.27 (0.050) Thick Aluminum
Finish: See Table

Channel style heat sink with folded back fins for increased cooling surface area. Available with tin plated solderable tabs for easy attachment to the printed circuit card.

ORDERING INFORMATION

Part Number	Description	Finish	Dia of PCB Plated Thru Hole for Tabs
7022BG	Channel heat sink with no solderable tabs	Black anodize	
7022PBG	Channel heat sink with no solderable tabs	Pre black anodize*	
7022B-MTG	With solderable tabs	Black anodize	2.90 (0.114)
7022PB-MTG	With solderable tabs	Pre black anodize*	2.90 (0.114)

* Edges cut during the manufacturing process will be unfinished.
See page 110 for more information

POPULAR OPTIONS: 7022B- ____ G

Base part no. A

Position	Code	Description	Location	Details
A	TC11-MT	Insulated device mounting clip for T0-220 and solderable tabs	Hole X	Page 93, 98

For additional options see page 85

5510 High performance channel style heat sink with folded back fins

Grease & Epoxy page112

Mounting Kits page 99

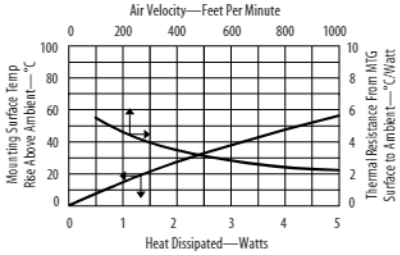

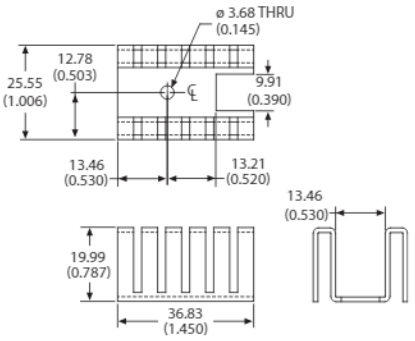

Material: 1.27 (0.050) Thick Aluminum
Finish: Black Anodize

High performance channel style heat sink with folded back fins for greater cooling capacity in a minimum of space when mounted horizontally. Folded back fin design maximizes surface area without increasing the vertical space required by the heat sink.

ORDERING INFORMATION

Part Number	Description
551002B00000G	High performance channel style heat sink with folded back fins

POPULAR OPTIONS: 551002B0 00 00G

Base part no. A

Position	Code	Description	Details
A	01	6-32 Wave On threaded insert 0.100 stand off	Page 89

For additional options see page 82

TO-220 Heat Sinks

6021, 6221 Channel style heat sink with straight fins

Grease & Epoxy page112
Mounting Kits page 99

Channel style heat sink with straight fins features integrated solderable tabs for easy mounting to the printed circuit card. Available with a single device mounting hole or slotted hole to accomodate varying device lead lengths.

FIGURE A

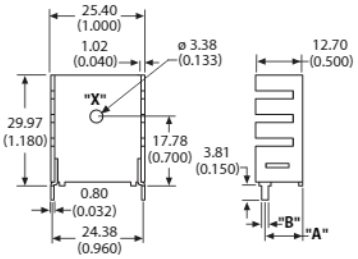

FIGURE B

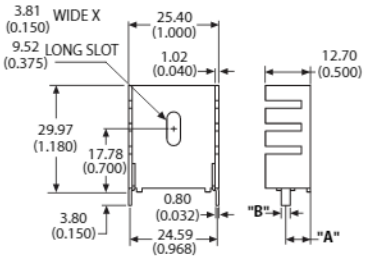

Material: 1.02 (0.040) Thick Aluminum
Finish: See Table

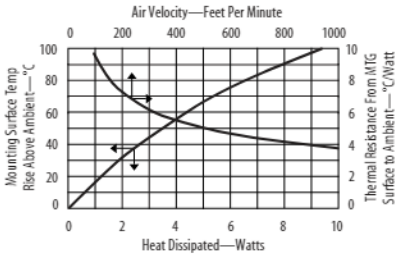

ORDERING INFORMATION

Part Number	Description	Finish	Figure	Dia of PCB Plated Thru Hole for Tabs	"A" Dim	"B" Dim
6021BG	Channel heat sink with straight fins and integrated tabs	Black anodize	A	2.21 (0.087)	10.16 (0.400)	1.78 (0.070)
6021PBG	Channel heat sink with straight fins and integrated tabs	Pre-black anodize*	A	2.21 (0.087)	10.16 (0.400)	1.78 (0.070)
6221PBG	With slotted device mounting hole	Pre-black anodize*	B	3.18 (0.125)	6.99 (0.275)	2.54 (0.100)

* Edges cut during the manufacturing process will be unfinished.
See page 110 for more information

POPULAR OPTIONS:

6021- ____ - ____ G

Available on the 6021 only

Base part no. A B

Position	Code	Description	Location	Details
A	B	Black anodize		
A	PB	Pre-black anodize*		
B	SF1	4-40 UNC-2A device mounting stud	Hole X	Page 96

For additional options for part 6021 see page 85

6230 Copper channel style heat sink with straight fins

Grease & Epoxy page112
Mounting Kits page 99

Copper channel style heat sink with straight fins features integrated tabs which can be twisted to attach the heat sink to the board prior to wave solder.

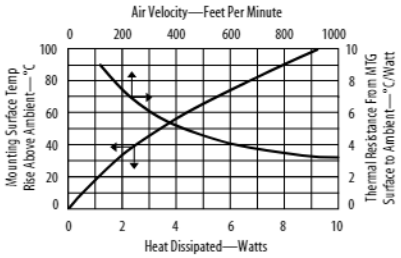

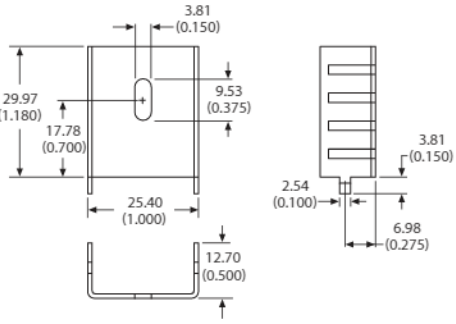

Material: 0.63 (0.025) Thick Copper
Finish: Tin Plated

ORDERING INFORMATION

Part Number	Description	Dia of PCB Plated Thru Hole for Tabs
6230DG	Channel heat sink with straight fins and integrated tabs	3.00 (0.118)

AAVID THERMALLOY
www.aavidthermalloy.com

AMERICA
USA Tel: +1 (603) 224-9988 email: info@aavid.com

EUROPE
Italy Tel: +39 051 764011 email: sales.it@aavid.com
United Kingdom Tel: +44 1793 401400 email: sales.uk@aavid.com

ASIA
Singapore Tel: +65 6362 8388 email: sales@aavid.com.sg
Taiwan Tel: +886(2) 2698-9888 email: sales@aavid.com.tw

TV35 Narrow channel style heat sink features twisted fins

Grease & Epoxy page112

Mounting Kits page 99

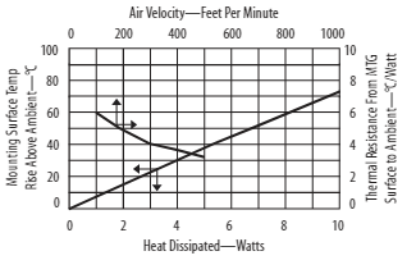

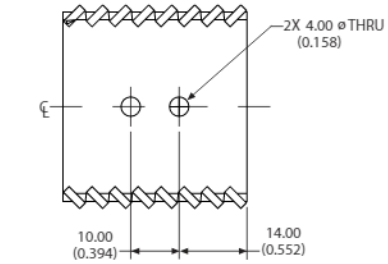

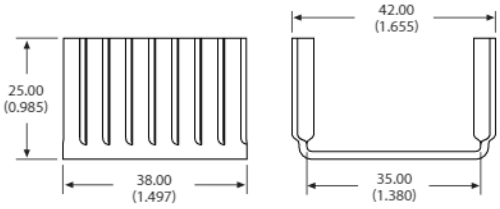

Material: 0.81 (0.032) Thick Aluminum
Finish: Black Anodize

Narrow channel style heat sink features twisted fins for increased air turbulence and better cooling. Mounts horizontally to accommodate two TO-220 devices.

ORDERING INFORMATION

Part Number	Description
TV35G	Channel style heat sink with twisted fins

TV46, TV47, TV58 Narrow channel style heat sink features twisted fins

Grease & Epoxy page112

Mounting Kits page 99

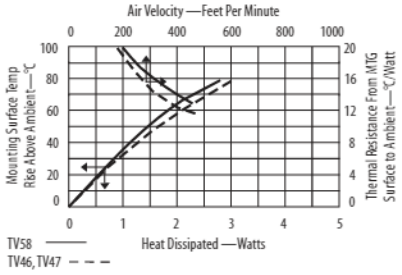

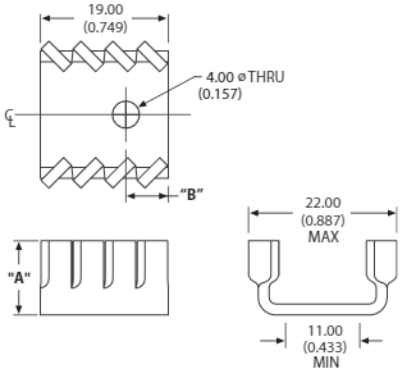

Material: 0.81 (0.032) Thick Aluminum
Finish: Black Anodize

Narrow channel style heat sink features twisted fins for increased air turbulence and better cooling. Can be mounted vertically or horizontally.

ORDERING INFORMATION

Part Number	"A" Dim	"B" Dim
TV46G	13.00 (0.512)	9.50 (0.374)
TV47G	13.00 (0.512)	6.30 (0.248)
TV58G	11.00 (0.433)	6.30 (0.248)

TO-220 Heat Sinks

TV265, TV1500, TV1505 Channel style heat sink features twisted fins

Grease & Epoxy page112 | Mounting Kits page 99

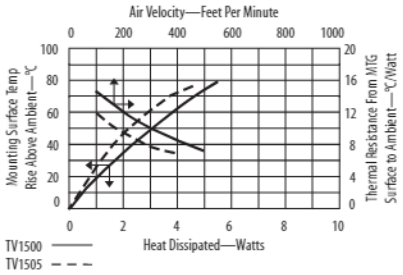

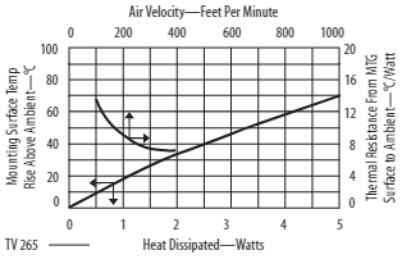

Channel style heat sink features twisted fins for increased air turbulence and better cooling. Can be mounted vertically or horizontally. Models are available with integrated twist tabs or mounting solderable tabs.

FIGURE A

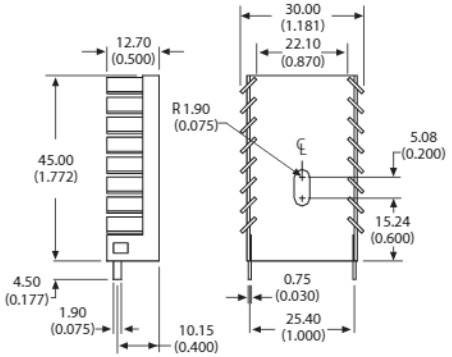

FIGURE B

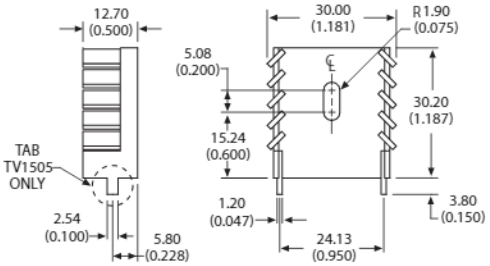

Material: 1.27 (0.050) Thick Aluminum
Finish: Black Anodize

ORDERING INFORMATION

Part Number	Description	Figure	Dia of PCB Plated Thru Hole for Tabs
TV265G	Channel style heat sink with twisted fins and solderable tabs	A	2.39 (0.094)
TV1500G	Channel style heat sink with twisted fins	B	
TV1505G	With integrated twist tabs	B	3.30 (0.130)

5900 Channel style heat sink features solderable tabs and twisted fins

Grease & Epoxy page112 | Mounting Kits page 99

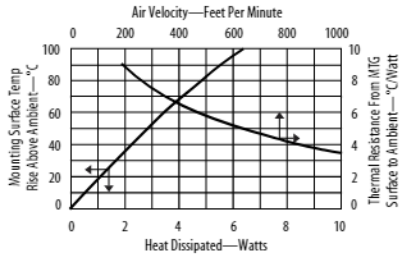

Channel style heat sink features solderable tabs and twisted fins for increased air turbulence for better cooling. For ease of assembly use with clip 7701 (sold separately) to attach device. See page 97 for clip information.

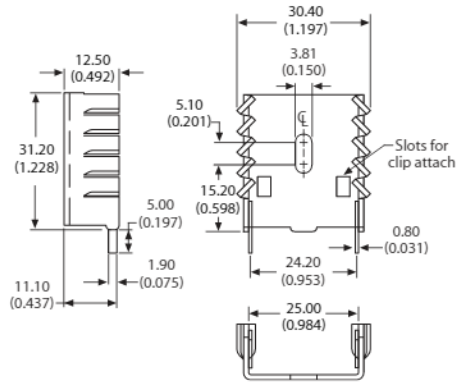

Material: 1.19 (0.047) Thick Aluminum
Finish: Pre Black Anodize*

ORDERING INFORMATION

Part Number	Description	Dia of PCB Plated Thru Hole for Tabs
5900PBG	Channel style heat sink with twisted fins and solderable tabs	2.40 (0.094)

* Edges cut during the manufacturing process will be unfinished.
See page 110 for more information.

AAVID THERMALLOY
www.aavidthermalloy.com
AMERICA USA Tel: +1 (603) 224-9988 email: info@aavid.com
EUROPE Italy Tel: +39 051 764011 email: sales.it@aavid.com
United Kingdom Tel: +44 1793 401400 email: sales.uk@aavid.com
ASIA Singapore Tel: +65 6362 8388 email: sales@aavid.com.sg
Taiwan Tel: +886(2) 2698-9888 email: sales@aavid.com.tw

5929, 5930 Channel style heat sink featuring twisted fins

Grease & Epoxy page112 | Mounting Kits page 99

Channel style heat sink features twisted fins for increased air turbulence for better cooling. Two heights are available and include wave solderable tin plated tabs for easy attachment to the PC board.

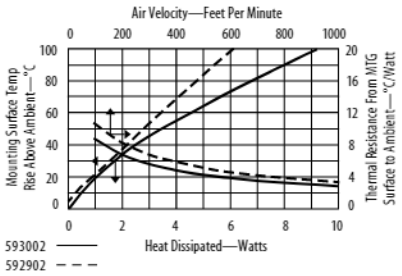

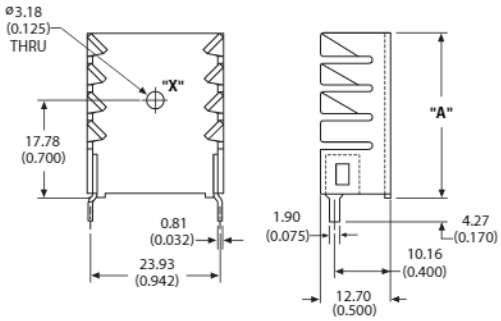

Material: 1.27 (0.050) Thick Aluminum
Finish: Black Anodize

ORDERING INFORMATION

Part Number	"A" Dim	Dia of PCB Plated Thru Hole for Tabs
592902B03400G	24.89 (0.980)	2.36 (0.093)
593002B03400G	29.97 (1.180)	2.36 (0.093)

POPULAR OPTIONS: 59 _ _ 02B034 00G
Base part no. — A

Position	Code	Description	Location	Details
A	05	4-40 male semiconductor mount 0.380 LG	Hole X	Page 90

For additional options see page 82

5630, 5766 Channel style heat sink featuring three integrated tabs

Grease & Epoxy page112 | Mounting Kits page 99

Channel style heat sink features three integrated tabs for greater stability and slotted mounting hole to accommodate a variety of device lead lengths. Available in two heights. Mounting tabs are designed for either soldering (tin finish) or twisted.

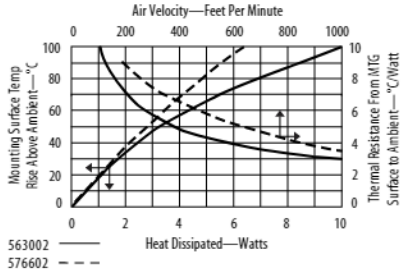

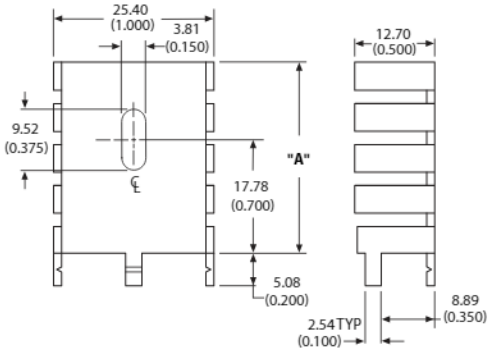

Material: 1.27 (0.050) Thick Aluminum
Finish: See Table

ORDERING INFORMATION

Part Number	"A" Dim	Finish	Dia of PCB Plated Thru Hole for Tabs
563002B00000G	29.97 (1.180)	Black anodize	3.10 (0.122)
563002D00000G	29.97 (1.180)	Tin plated	3.10 (0.122)
576602B00000G	24.13 (0.950)	Black anodize	3.10 (0.122)
576602D00000G	24.13 (0.950)	Tin plated	3.10 (0.122)

5750 Channel style heat sink with two integrated tabs

Grease & Epoxy page112 | Mounting Kits page 99

Channel style heat sink features two integrated tabs and slotted mounting hole to accommodate a variety of device lead lengths. Mounting tabs are designed for either soldering (tin finish) or twisted.

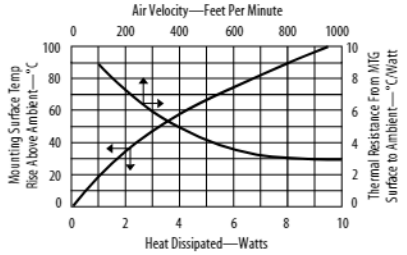

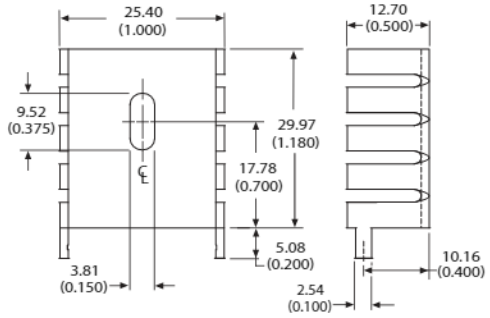

Material: 1.27 (0.050) Thick Aluminum
Finish: See Table

ORDERING INFORMATION

Part Number	Finish	Dia of PCB Plated Thru Hole for Tabs
575002B00000G	Black anodize	3.10 (0.122)
575002D00000G	Tin plated	3.10 (0.122)

TO-220 Heat Sinks

5901 Channel style heat sink featuring recessed lower fins

Grease & Epoxy page112 | Mounting Kits page 99

Channel style heat sink features recessed lower fins to allow closer component spacing and longer upper fins for maximum cooling. Includes two solderable tabs for easy attachment to the PC card.

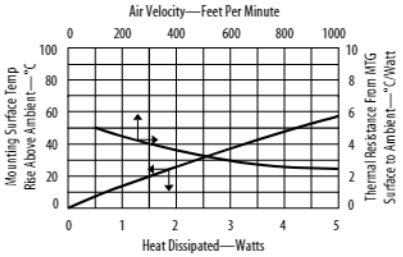

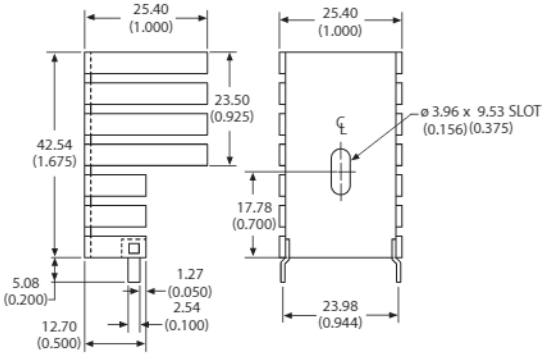

Material: 1.27 (0.050) Thick Aluminum
Finish: Black Anodize

ORDERING INFORMATION

Part Number	Description	Dia of PCB Plated Thru Hole for Tabs
590102B03600G	High performance heat sink with recessed lower fins	2.92 (0.115)

For additional options see page 82

5903 Channel style heat sink featuring slotted mounting hole

Grease & Epoxy page112 | Mounting Kits page 99

Channel style heat sink features slotted mounting hole to accommodate a variety of devices and lead lengths. Includes two solderable tabs for easy attachment to the PC card.

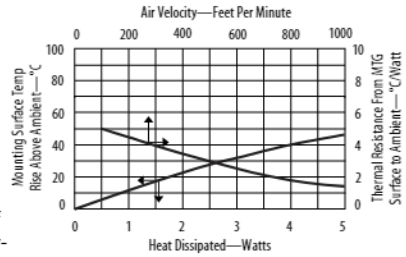

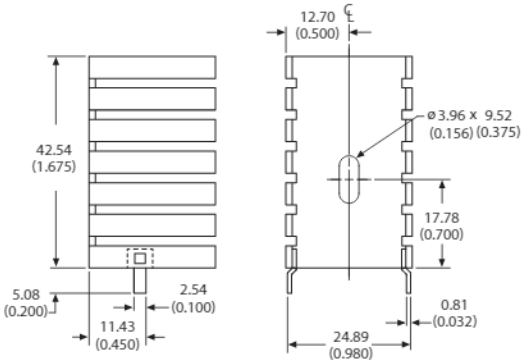

Material: 1.27 (0.050) Thick Aluminum
Finish: Black Anodize

ORDERING INFORMATION

Part Number	Description	Dia of PCB Plated Thru Hole for Tabs
590302B03600G	High performance heat sink with solderable tabs	2.92 (0.115)

For additional options see page 82

5770, 5771, 5772 Slim low cost channel style heat sink

Grease & Epoxy page112 | Mounting Kits page 99

Slim low cost channel style heat sink is ideal where space and cost are limited. Available in 3 fin heights with or without solderable mounting tab.

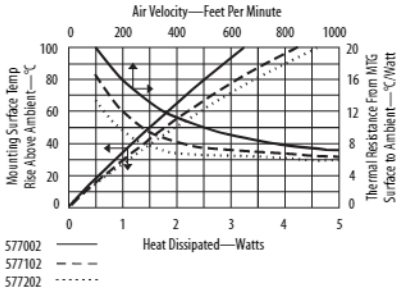

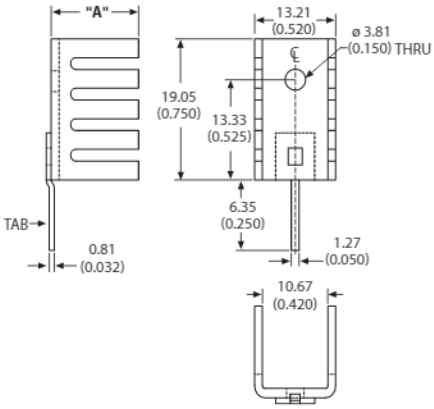

Material: 1.27 (0.050) Thick Aluminum
Finish: Black Anodize

ORDERING INFORMATION

Part Number	Description	"A" Dim	Dia of PCB Plated Thru Hole for Tabs
577002B00000G	Slim, low cost channel style heat sink with no solderable tabs	6.35 (0.250)	
577002B04000G	With solderable tab	6.35 (0.250)	1.73 (0.068)
577102B00000G	Slim, low cost channel style heat sink with no solderable tabs	9.52 (0.375)	
577102B04000G	With solderable tab	9.52 (0.375)	1.73 (0.068)
577202B00000G	Slim, low cost channel style heat sink with no solderable tabs	12.70 (0.500)	
577202B04000G	With solderable tab	12.70 (0.500)	1.73 (0.068)

POPULAR OPTIONS: 577_ _02B 0 4000G
Base part no. A

Position	Code	Description	Details
A	3	In-Sil-8™ pad	Page 86

For additional options see page 82

AAVID THERMALLOY
www.aavidthermalloy.com

AMERICA
USA Tel: +1 (603) 224-9988 email: info@aavid.com

EUROPE
Italy Tel: +39 051 764011 email: sales.it@aavid.com
United Kingdom Tel: +44 1793 401400 email: sales.uk@aavid.com

ASIA
Singapore Tel: +65 6362 8388 email: sales@aavid.com.sg
Taiwan Tel: +886(2) 2698-9888 email: sales@aavid.com.tw

6109, 6110 Low cost channel style heat sink featuring integrated alignment tabs

Grease & Epoxy page112

Mounting Kits page 99

Low cost channel style heat sink features integrated alignment tabs to prevent the device from rotating while applying torque to the mounting hardware. Available in two lengths with a pre-black anodized finish.

FIGURE A

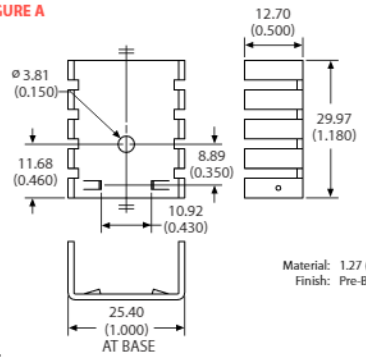

FIGURE B

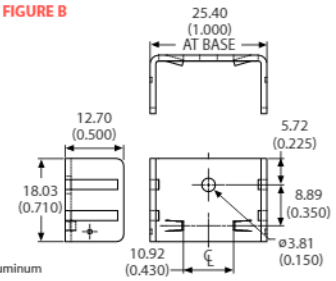

Material: 1.27 (0.050) Thick Aluminum
Finish: Pre-Black Anodize*

ORDERING INFORMATION

Part Number	Description	Figure
6109PBG	Low cost channel heat sink with device locating tabs	A
6110PBG	Low cost channel heat sink with device locating tabs	B

* Edges cut during the manufacturing process will be unfinished.
See page 110 for more information

POPULAR OPTIONS: 61__PB - ___ G

Base part no. A

Position	Code	Description	Details
A	MT	Solderable mounting tabs	Page 93

For additional options see page 85

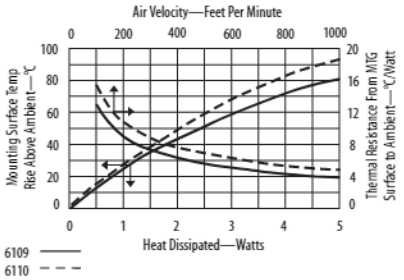

7178 Copper narrow channel style heat sink with a single integrated tab

Grease & Epoxy page112

Mounting Kits page 99

Copper narrow channel style heat sink includes a single integrated tab to allow easy attachment to the PC board. Tin plated finish ensures easy solderability.

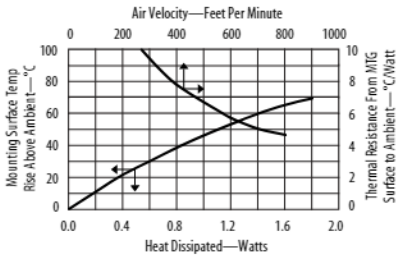

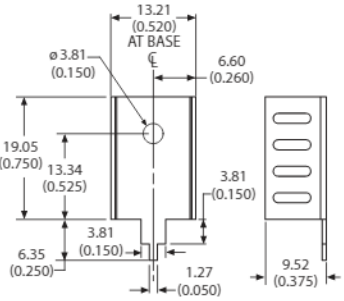

Material: 0.63 (0.025) Thick Copper
Finish: Tin Plated

ORDERING INFORMATION

Part Number	Description	Dia of PCB Plated Thru Hole for Tabs
7178DG	Narrow channel copper heat sink	2.54 (0.100)

7136, 7139 Copper channel style slide on heat sink featuring integrated mounting clip

Copper channel style slide on heat sink features integrated mounting clip for easy no hardware attachment to the device. Also includes solderable mounting tabs for easy attachment to the PC board.

FIGURE A

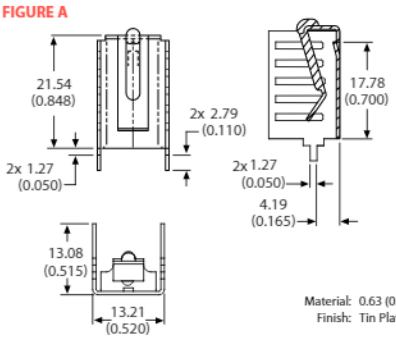

FIGURE B

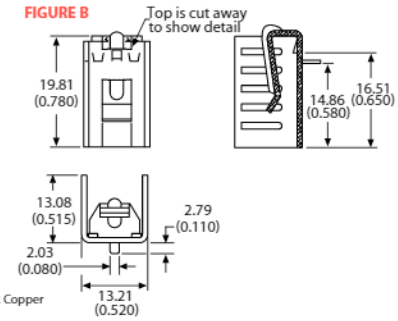

Material: 0.63 (0.025) Thick Copper
Finish: Tin Plated

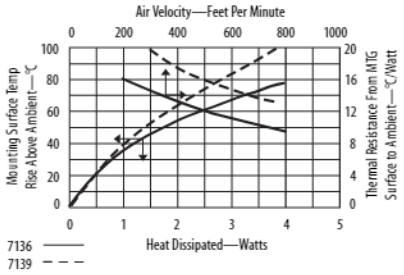

ORDERING INFORMATION

Part Number	Description	Figure	Dia of PCB Plated Thru Hole for Tabs
7136DG	Vertical mount	A	2.54 (0.100)
7139DG	Horizontal mount	B	2.54 (0.100)

TO-220 Heat Sinks

7128 Copper channel style heat sink with integrated clip

Copper channel style heat sink with integrated clip and locking tab for secure attachment to the device. Narrow profile uses less board space. Includes tin plated solderable tabs for easy attachment to the printed circuit card.

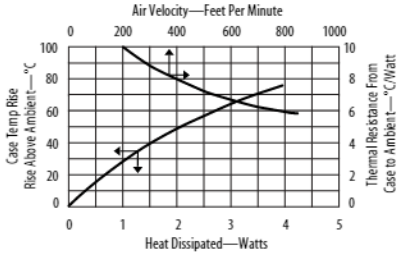

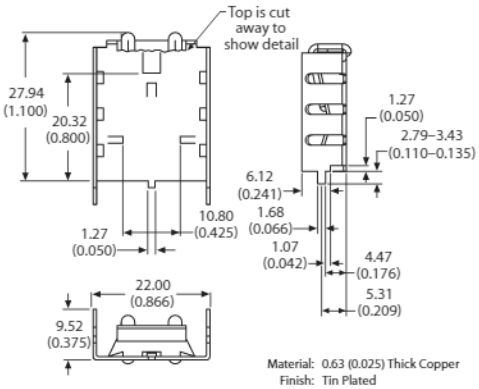

ORDERING INFORMATION

Part Number	Description	Dia of PCB Plated Thru Hole for Tabs
7128DG	Slide on channel heat sink with integrated clip and locking tabs	2.92 (0.115)

6038 Channel style heat sink with integrated clip

Channel style heat sink with integrated clip and locking tab for secure attachment to the device. Tabs can be bent for mounting.

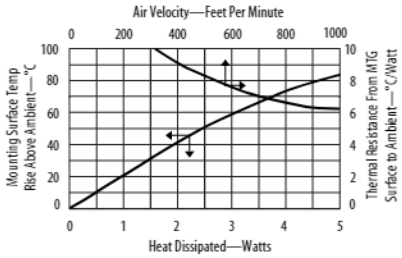

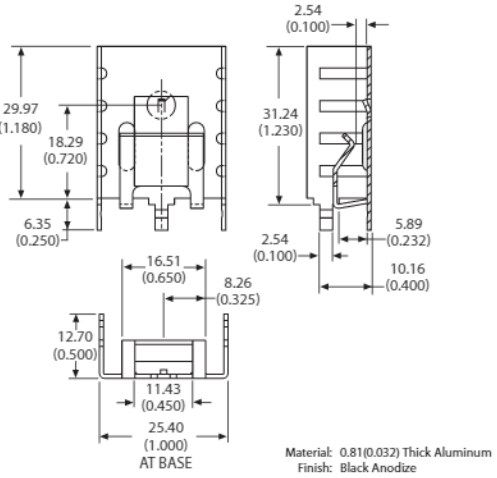

ORDERING INFORMATION

Part Number	Description	Dia of PCB Plated Thru Hole for Tabs
6038BG	Slide on channel heat sink with integrated clip and locking tabs	3.81 (0.150)

7142 Narrow channel style heat sink with integrated clip

Narrow channel style heat sink with integrated clip and locking tab for secure attachment to the device. Device can be mounted horizontally using a single center tab that can be soldered directly to the PC board.

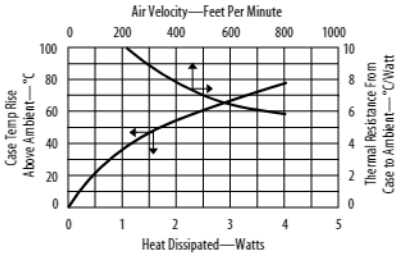

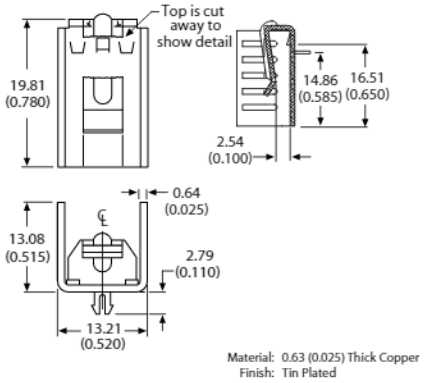

ORDERING INFORMATION

Part Number	Description	Dia of PCB Plated Thru Hole for Tabs
7142DG	Slide on narrow channel heat sink with integrated clip and locking tabs	3.18 (0.125)

AAVID THERMALLOY
www.aavidthermalloy.com

AMERICA
USA Tel: +1 (603) 224-9988 email: info@aavid.com

EUROPE
Italy Tel: +39 051 764011 email: sales.it@aavid.com
United Kingdom Tel: +44 1793 401400 email: sales.uk@aavid.com

ASIA
Singapore Tel: +65 6362 8388 email: sales@aavid.com.sg
Taiwan Tel: +886(2) 2698-9888 email: sales@aavid.com.tw

6238, 6239 Channel style heat sink with integrated clip

Channel style heat sink with integrated clip features strong spring tension and device locking tab to attach device securely to the heat sink. Available with solderable tabs for vertical mount or without tabs for mounting horizontally.

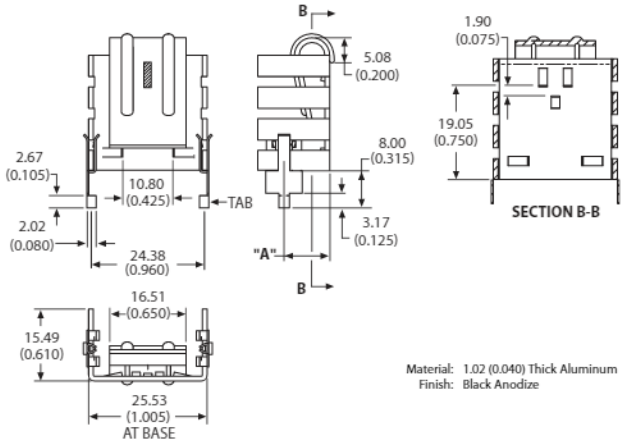

Material: 1.02 (0.040) Thick Aluminum
Finish: Black Anodize

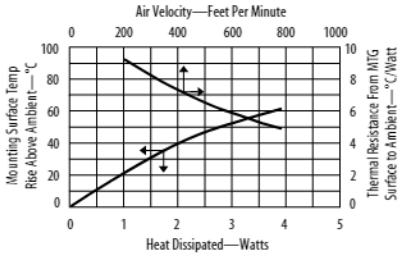

ORDERING INFORMATION

Part Number	Description	"A" Dim	Dia of PCB Plated Thru Hole for Tabs
6238BG	Channel heat sink with integral clip, no solderable tab		
6238B-MTG	With solderable mounting tabs	10.16 (0.400)	2.90 (0.114)
6239B-MTG	With solderable mounting tabs	6.99 (0.275)	2.90 (0.114)

For additional options see page 85

5342 Channel style heat sink with convenient clip

Grease & Epoxy page112

Mounting Kits page 99

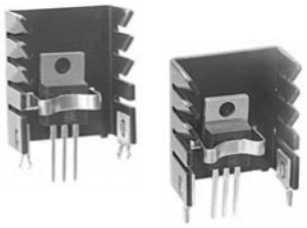

Channel style heat sink features a dittin to locate the device and a convenient clip to eliminate the need for mounting hardware. The twisted fins increase cooling efficiency. Available in two solderable mounting tab styles. Can be ordered without the ditton if electrical isolation is required or for mounting tabless packages.

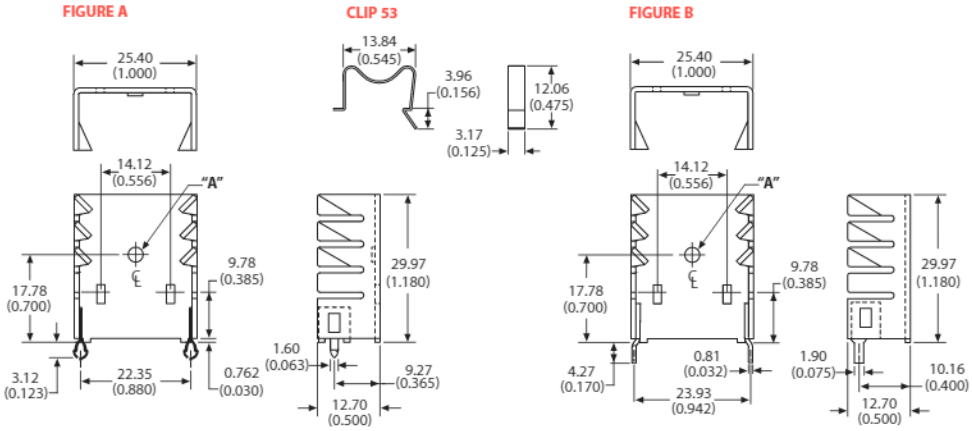

Material: 1.27 (0.050) Thick Aluminum
Finish: Black Anodize

ORDERING INFORMATION

Part Number	Description	Figure	"A" Dim	Dia of PCB Plated Thru Hole for Tabs
534202B02853G	With Shur-Lock™ tabs and clip	A	Dia 3.05(0.120) x 0.64(0.025) High Dittin	2.39 (0.094)
534202B03453G	With solderable mounting tabs and clip	B	Dia 3.05(0.120) x 0.64(0.025) High Dittin	2.39 (0.094)
534265B02853G	With Shur-Lock™ tabs and clip	A	No Dittin	2.39 (0.094)
534265B03453G	With solderable mounting tabs and clip	B	No Dittin	2.39 (0.094)

For additional options see page 82

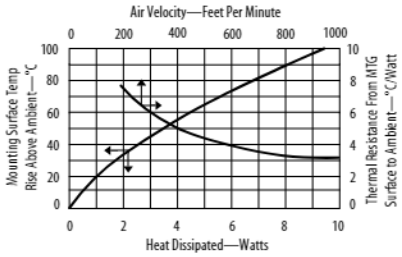

TO-220 Heat Sinks

7141 Copper narrow channel style heat sink with integrated clip

Copper narrow channel style heat sink with integrated clip and locking tab for secure attachment to the device. Single center tab can be soldered directly to the PC board.

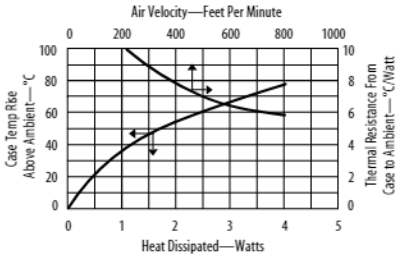

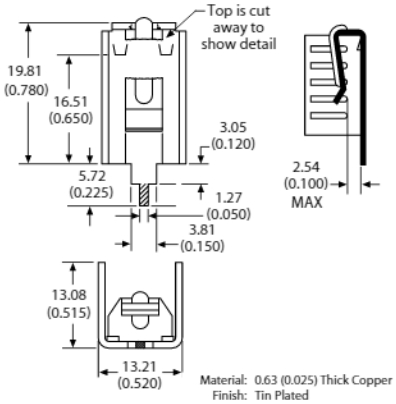

Material: 0.63 (0.025) Thick Copper
Finish: Tin Plated

ORDERING INFORMATION

Part Number	Description	Dia of PCB Plated Thru Hole for Tabs
7141DG	Narrow channel heat sink with integrated clip	2.77 (0.109)

5073 Economy, narrow base, low profile channel style heat sink

Grease & Epoxy page112
Mounting Kits page 99

Economy, narrow base, low profile channel style heat sink is perfect for use on printed circuit boards with 0.500 inch centering. When mounted horizontally, the total height of the heat sink is just 0.380.

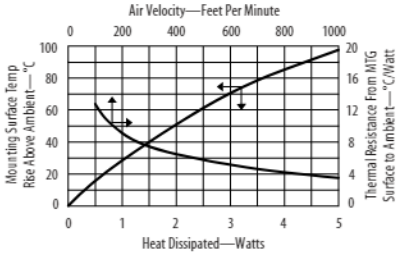

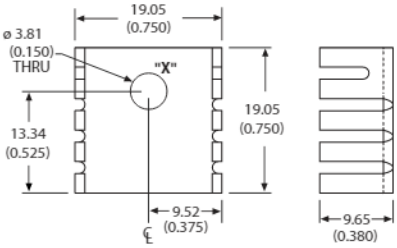

Material: 1.27 (0.050) Thick Aluminum
Finish: See Table

ORDERING INFORMATION

Part Number	Finish
507302B00000G	Black anodize
507302J00000G	Pre-black anodize*

* Edges cut during the manufacturing process will be unfinished. See page 110 for more information

POPULAR OPTIONS: 507302 _ 000 00G

Base part no. — A

Position	Code	Description	Location	Details
A	09	Stud 4–40 x 0.350 LG	Hole X	Page 96

For additional options see page 82

5041, 5042 Economy, narrow base, low profile channel style heat sink

Grease & Epoxy page112
Mounting Kits page 99

Economy, narrow base, low profile channel style heat sink is perfect for use on printed circuit boards with tight component spacing. Models are available for single and dual device mounting.

FIGURE A

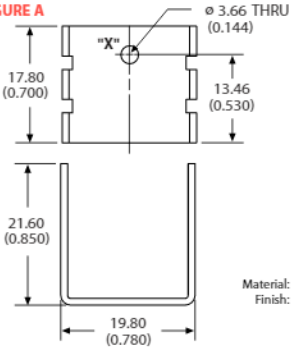

FIGURE B

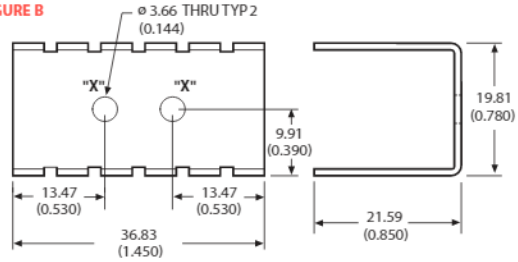

Material: 1.02 (0.040) Thick Aluminum
Finish: Black Anodize

ORDERING INFORMATION

Part Number	Description	Figure
504102B00000G	Economy, narrow base channel style heat sink	A
504222B00000G	For dual devices	B

POPULAR OPTIONS: 504_ _2B000 00G

Base part no. — A

Position	Code	Description	Location	Details
A	01	6-32 Wave On threaded insert 0.100 stand off	Hole X	Page 89

For additional options see page 82

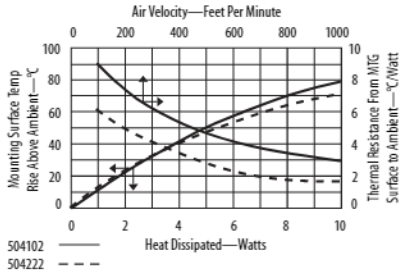

AAVID THERMALLOY
www.aavidthermalloy.com
AMERICA USA Tel: +1 (603) 224-9988 email: info@aavid.com
EUROPE Italy Tel: +39 051 764011 email: sales.it@aavid.com
United Kingdom Tel: +44 1793 401400 email: sales.uk@aavid.com
ASIA Singapore Tel: +65 6362 8388 email: sales@aavid.com.sg
Taiwan Tel: +886(2) 2698-9888 email: sales@aavid.com.tw

TV40 Narrow channel style heat sink features twisted fins

Grease & Epoxy page112
Mounting Kits page 99

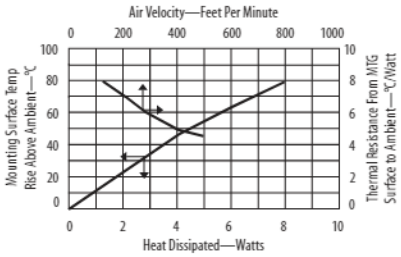

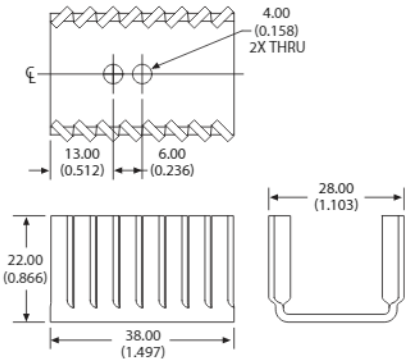

Material: 0.81 (0.032) Thick Aluminum
Finish: Black Anodize

Narrow channel style heat sink features twisted fins for increased air turbulence and better cooling. Mounts horizontally to accommodate two TO-220 devices.

ORDERING INFORMATION

Part Number	Description
TV40G	Narrow channel style heat sink with twisted fins

7173 Copper channel style heat sink featuring two integrated tabs

Grease & Epoxy page112
Mounting Kits page 99

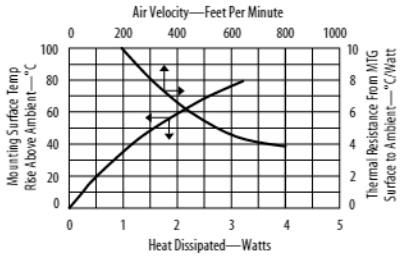

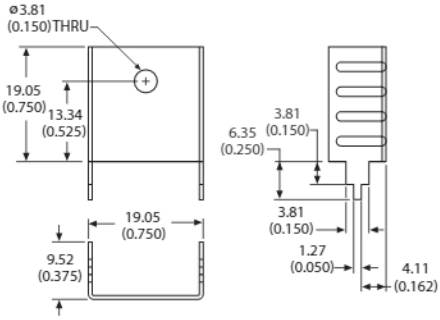

Material: 0.63 (0.025) Thick Copper
Finish: Tin Plated

Copper channel style heat sink features two integrated tabs. The heat sink is tin plated and can be soldered to the PC board.

ORDERING INFORMATION

Part Number	Description	Dia of PCB Plated Thru Hole for Tabs
7173DG	Copper channel style heat sink	2.54 (0.100)

6236 Channel style heat sink featuring an integrated device retaining clip

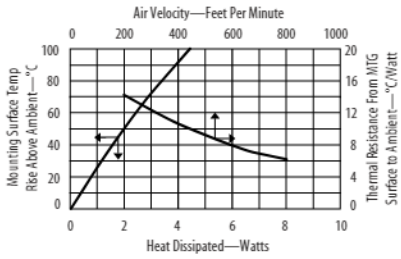

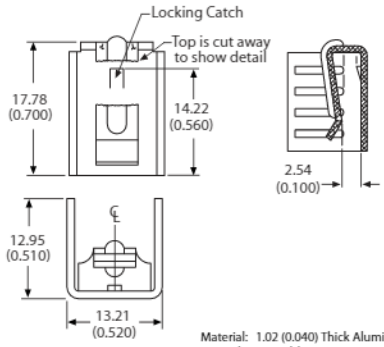

Material: 1.02 (0.040) Thick Aluminum
Finish: See Table

Channel style heat sink features an integrated device retaining clip that eliminates the need for attachment hardware. Available in two finish options.

ORDERING INFORMATION

Part Number	Finish
6236BG	Black anodize
6236PBG	Pre-black anodize*

* Edges cut during the manufacturing process will be unfinished. See page 110 for more information.

TO-220 Heat Sinks

5306, 5307, 5760 Channel style heat sink with wide mounting surface

Grease & Epoxy page112 | Mounting Kits page 99

Lightweight, low cost channel style heat sink with wide mounting surface and selection of lengths to accept a variety of packages. Models accomodate one or two devices.

FIGURE A

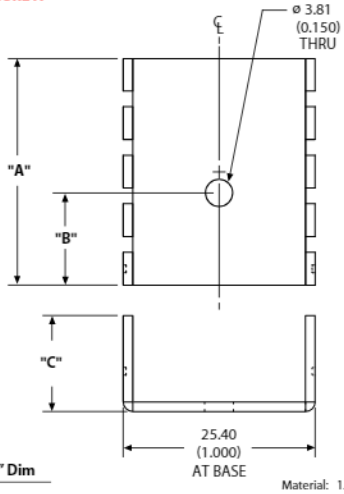

FIGURE B

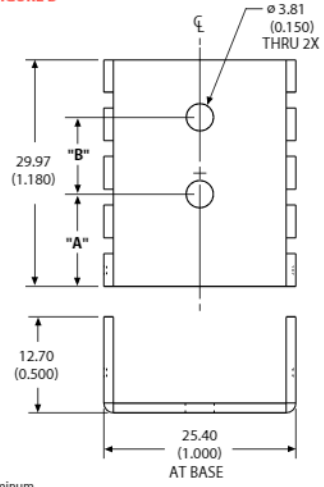

Material: 1.27 (0.050) Thick Aluminum
Finish: Black Anodize

ORDERING INFORMATION

Part Number	Figure	"A" Dim	"B" Dim	"C" Dim
530613B00000G	B	12.19 (0.480)	10.16 (0.400)	
530614B00000G	A	29.97 (1.180)	11.68 (0.460)	12.70 (0.500)
530714B00000G	A	18.03 (0.710)	12.32 (0.485)	12.70 (0.500)
576012B00000G	A	22.86 (0.900)	11.43 (0.450)	9.65 (0.380)
576014B00000G	A	22.86 (0.900)	8.13 (0.320)	9.65 (0.380)

For additional options see page 82

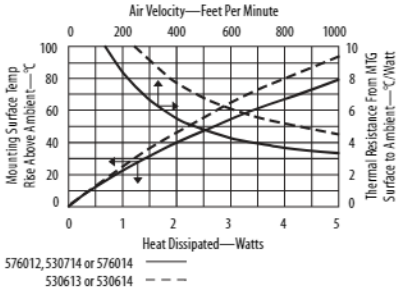

5779, 5786 Twin channel style heat sink

Grease & Epoxy page112 | Mounting Kits page 99

Twin channel style heat sink vertically mounts two TO-220 devices to a single heat sink. Center fins increase cooling capacity. Available with integrated twist tabs or staked on solder tabs for easy attachment to the PC board.

FIGURE A

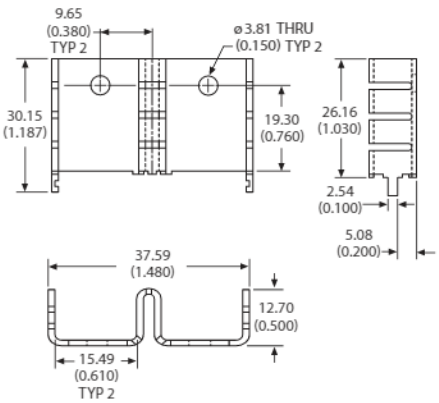

FIGURE B

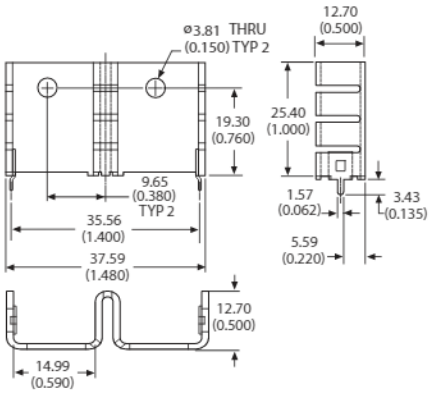

Material: 1.27 (0.050) Thick Aluminum
Finish: Black Anodize

ORDERING INFORMATION

Part Number	Description	Figure	Dia of PCB Plated Thru Hole for Tabs
577922B00000G	Twin channel style heat sink with integrated tabs	A	3.10 (0.122)
578622B03200G	With staked on solderable tabs	B	1.91 (0.075)

For additional options see page 82

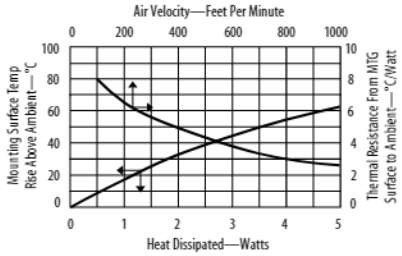

AAVID THERMALLOY
www.aavidthermalloy.com

AMERICA
USA Tel: +1 (603) 224-9988 email: info@aavid.com

EUROPE
Italy Tel: +39 051 764011 email: sales.it@aavid.com
United Kingdom Tel: +44 1793 401400 email: sales.uk@aavid.com

ASIA
Singapore Tel: +65 6362 8388 email: sales@aavid.com.sg
Taiwan Tel: +886(2) 2698-9888 email: sales@aavid.com.tw

5069, 5070, 5071, 5072 Hat section style heat sink

Grease & Epoxy page112

Mounting Kits page 99

Hat section style heat sinks are low profile and perfect for use on printed circuit cards with 0.500 inch centering between boards. For higher power applications the 5071 hat can be added to the 5070 or 5072 for double sided cooling of a TO-220 device.

FIGURE A

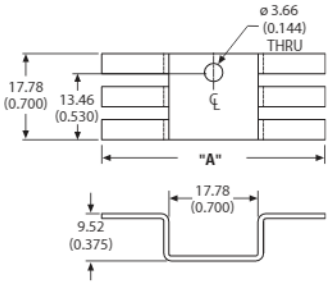

Material: 1.02 (0.040) Thick Aluminum
Finish: Black Anodize

FIGURE B

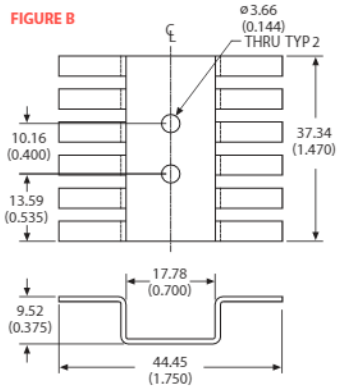

FIGURE C

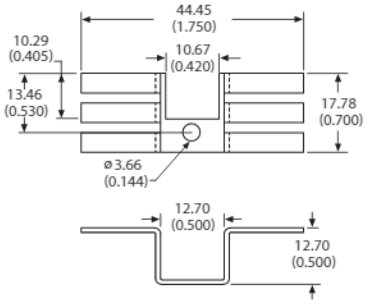

ORDERING INFORMATION

Part Number	Description	Figure	"A" Dim
506902B00000G	Hat section heat sink	A	31.75 (1.250)
507002B00000G	Wide hat section heat sink	A	44.45 (1.750)
507102B00000G	Hat section heat sink with cut out	C	
507222B00000G	Dual device hat section heat sink	B	

POPULAR OPTIONS: 50_ _ _2B 0 0000G

Base part no. (T) — A

Position	Code	Description	Details
A	1	Kon Dux™ pad	Page 86

For additional options see page 82

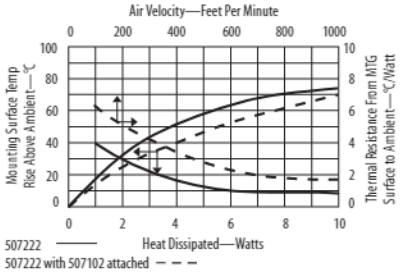

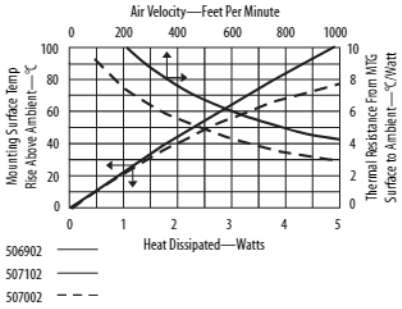

7137, 7140 Copper, hat section, slide on heat sink

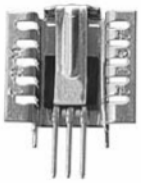

Copper, hat section, slide on heat sink features integrated mounting clip for easy no hardware attachment to the device. Also included are solderable mounting tabs for easy attachment to the PC card.

FIGURE A

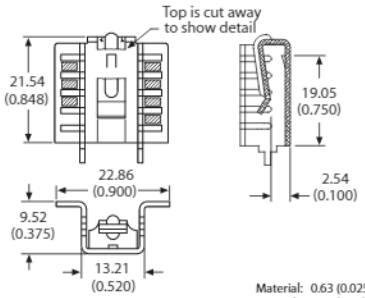

Material: 0.63 (0.025) Thick Copper
Finish: Tin Plated

FIGURE B

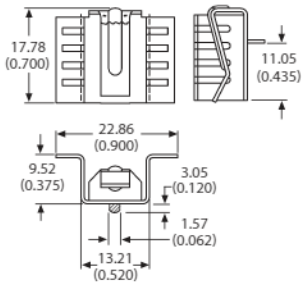

ORDERING INFORMATION

Part Number	Description	Figure	Dia of PCB Plated Thru Hole for Tabs
7137DG	Vertical mount	A	2.54 (0.100)
7140DG	Horizontal mount	B	2.54 (0.100)

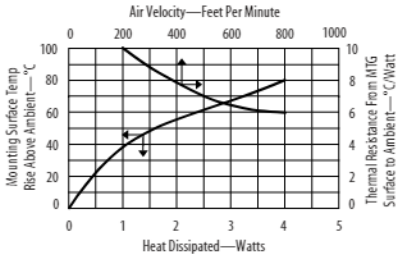

TO-220 Heat Sinks

6237 Hat section style heat sink featuring an integrated clip

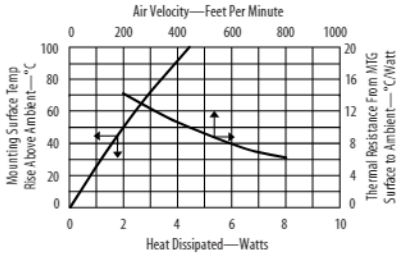

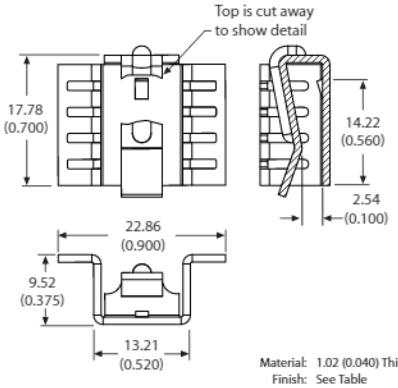

Material: 1.02 (0.040) Thick Aluminum
Finish: See Table

Hat section style heat sink features an integrated clip for secure attachment to the device without added hardware. Available in two finishes.

ORDERING INFORMATION

Part Number	Finish
6237BG	Black anodize
6237PBG	Pre-black anodize*

* Edges cut during the manufacturing process will be unfinished.
See page 110 for more information

5690 High power, square basket heat sink with folded back fins

Grease & Epoxy page 112
Mounting Kits page 99

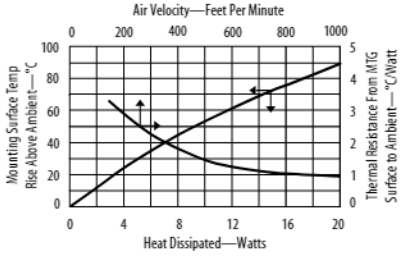

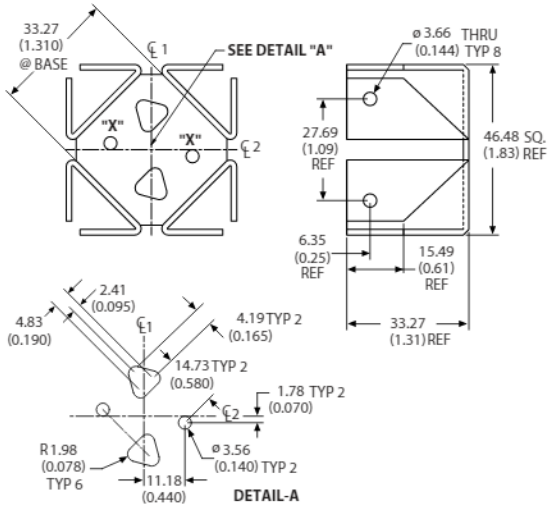

Material: 1.60 (0.063) Thick Aluminum
Finish: Black Anodize

High power, square basket heat sink accommodates two TO-220 devices. Features folded back fins for increased surface area for maximum cooling.

ORDERING INFORMATION

Part Number	Description
569022B00000G	High power, square basket, folded back fin heat sink

POPULAR OPTIONS: 569022B0 00 00G

Base part no. — A

Position	Code	Description	Location	Details
A	01	6–32 Wave On threaded insert, 0.100 stand off 0.062 Bd	Hole X	Page 89

For additional options see page 82

AAVID THERMALLOY
www.aavidthermalloy.com
AMERICA USA Tel: +1 (603) 224-9988 email: info@aavid.com
EUROPE Italy Tel: +39 051 764011 email: sales.it@aavid.com
United Kingdom Tel: +44 1793 401400 email: sales.uk@aavid.com
ASIA Singapore Tel: +65 6362 8388 email: sales@aavid.com.sg
Taiwan Tel: +886(2) 2698-9888 email: sales@aavid.com.tw

5748, 5798, 5799 Clip on style heat sink featuring an integrated clip

Clip on style heat sink features an integrated clip to retain the device meaning no mounting hardware is required. Models have fins on both sides, left or right side and are available with solderable tabs for easy attachment to the PC board.

FIGURE A

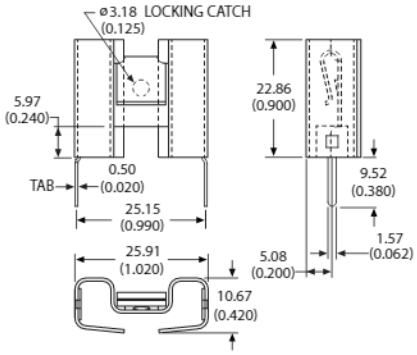

FIGURE B

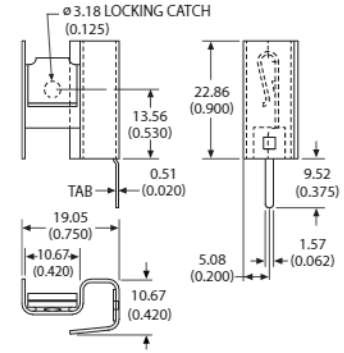

Material: 0.63 (0.025) Thick Aluminum
Finish: Black Anodize

Note: Fins on left or right. Right hand side model shown

ORDERING INFORMATION

Part Number	Description	Figure	Dia of PCB Plated Thru Hole for Tabs
574802B00000G	Clip on heat sink, left & right side fins, no solderable tabs	A	
574802B03300G	Left & right side fins with solderable tabs	A	1.91 (0.075)
579802B00000G	Left side fin, no solderable tabs	B	
579802B03300G	Left side fin with solderable tab	B	1.91 (0.075)
579902B00000G	Right side fin, no solderable tabs	B	
579902B03300G	Right side fin with solderable tab	B	1.91 (0.075)

For additional options see page 82

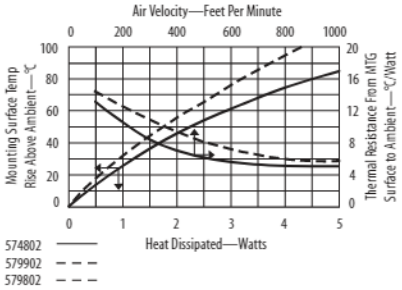

6043, 6049, 6094 Low cost, clip on style heat sink featuring a locking tab

Low cost, clip on style heat sink features a locking tab to prevent the device from dislodging from the heat sink. Also includes slide runners to ensure proper device alignment. Available in a pre-black anodize finish.

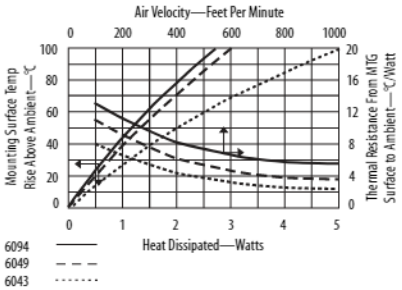

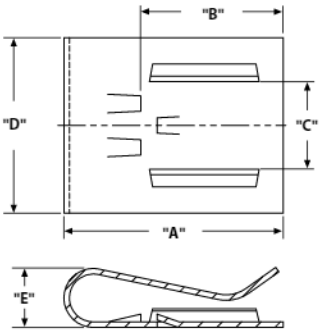

Material: 0.63 (0.025) Thick Aluminum
Finish: Pre-Black Anodize*

ORDERING INFORMATION

Part Number	"A" Dim	"B" Dim	"C" Dim	"D" Dim	"E" Dim
6043PBG	25.40 (1.000)	16.51 (0.650)	10.16 (0.400)	20.32 (0.800)	6.81 (0.268)
6049PBG	25.40 (1.000)	16.51 (0.650)	10.16 (0.400)	13.97 (0.550)	6.81 (0.268)
6094PBG	19.71 (0.776)	14.73 (0.580)	10.92 (0.430)	20.32 (0.800)	6.45 (0.254)

*Edges cut during the manufacturing process will be unfinished.
See page 110 for more information

TO-220 Heat Sinks

PF750, PF758 Slip on heat sink featuring integrated tabs

Slip on heat sink is tin plated and has integrated tabs for soldering to the PC board. Locating features provide simple device alignment and spring action holds the device for good thermal contact.

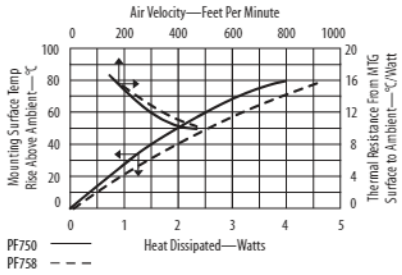

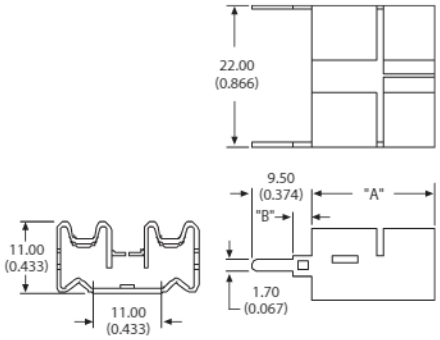

Material: 0.71 (0.028) Thick Aluminum
Finish: Tin Plate

ORDERING INFORMATION

Part Number	Description	"A" Dim	"B" Dim
PF750G	Slip on heat sink with tabs	19.00(0.748)	3.00(0.118)
PF758G	Slip on heat sink with tabs	24.00(0.945)	5.20(0.205)

PF752 Slip on heat sink

Slip on heat sink has locating features for simple device alignment. Spring action holds the device for good thermal contact.

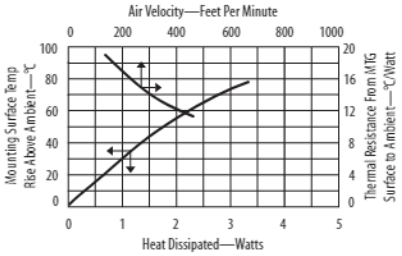

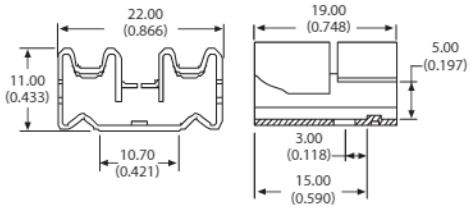

Material: 0.71 (0.028) Thick Aluminum
Finish: Black Anodize

ORDERING INFORMATION

Part Number	Description
PF752G	Slip on heat sink

PF720, PF723 Slip on heat sink

Slip on heat sink has locating features for simple device alignment. Spring action holds the device for good thermal contact. Available with or without solderable mounting tabs

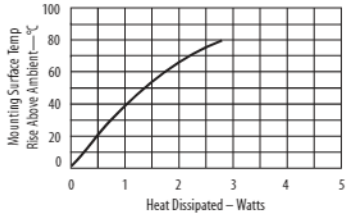

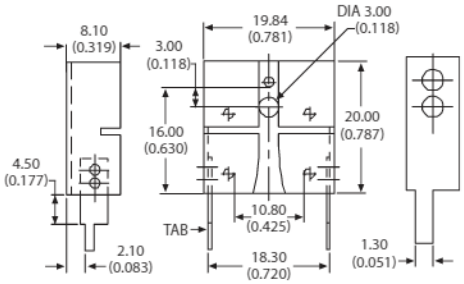

Material: 0.71 (0.028) Thick Aluminum
Finish: Pre-Black Paint*

ORDERING INFORMATION

Part Number	Description
PF720G	Slip on heat sink, no solderable tabs
PF723G	With solderable tabs

* Edges cut during manufacturing process will be unfinished

AAVID THERMALLOY
www.aavidthermalloy.com

AMERICA
USA Tel: +1 (603) 224-9988 email: info@aavid.com

EUROPE
Italy Tel: +39 051 764011 email: sales.it@aavid.com
United Kingdom Tel: +44 1793 401400 email: sales.uk@aavid.com

ASIA
Singapore Tel: +65 6362 8388 email: sales@aavid.com.sg
Taiwan Tel: +886(2) 2698-9888 email: sales@aavid.com.tw

5744, 5745, 5746, 5749 Low cost, labor saving, slide on heat sink featuring spring action

Low cost, labor saving, slide on heat sink features spring action to firmly hold the device tab to the heat sink providing maximum metal to metal contact and good thermal conduction. Available with solderable tabs for horizontal or vertical mounting to the PC board.

FIGURE A

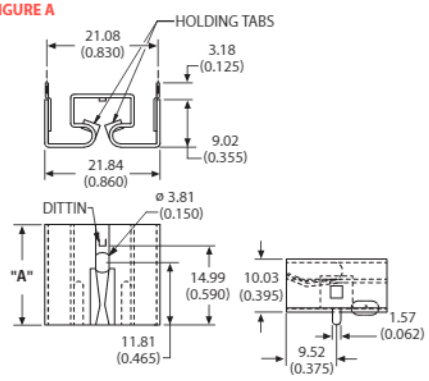

FIGURE B

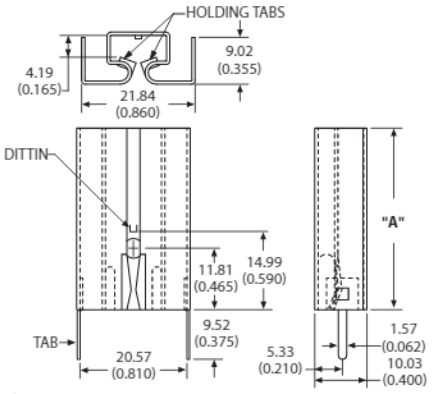

Material: 0.63 (0.025) Thick Aluminum
Finish: Black Anodize

ORDERING INFORMATION

Part Number	Description	Figure	"A" Dim	Dia of PCB Plated Thru Hole for Tabs
574402B00000G	Low cost slide on heat sink, no solderable tabs	A	19.05 (0.750)	
574402B03200G	With solderable tabs for horizontal mounting	A	19.05 (0.750)	1.91 (0.075)
574502B00000G	Low cost slide on heat sink, no solderable tabs	B	19.05 (0.750)	
574502B03300G	With solderable tabs for vertical mounting	B	19.05 (0.750)	1.91 (0.075)
574602B00000G	Low cost slide on heat sink , no solderable tabs	B	17.53 (0.690)	
574602B03300G	With solderable tabs for vertical mounting	B	17.53 (0.690)	1.91 (0.075)
574902B00000G	Low cost slide on heat sink , no solderable tabs	B	35.05 (1.380)	
574902B03300G	With solderable tabs for vertical mounting	B	35.05 (1.380)	1.91 (0.075)

For additional options see page 82

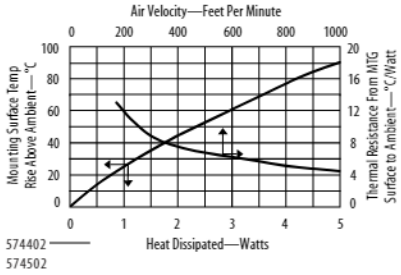

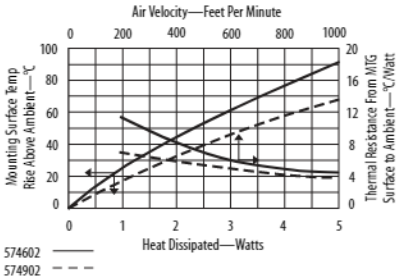

5741 Low cost, labor saving, slide on heat sink featuring spring action

Mounting Kits page 99

Low cost, labor saving, slide on heat sink features spring action to firmly hold the device tab to the heat sink providing maximum metal to metal contact and good thermal conduction. Includes a clearance hole in the top side to allow the use of optional hardware to attach device and heat sink to circuit board or other surface. Also available with solderable tabs for vertical mounting to the PC board.

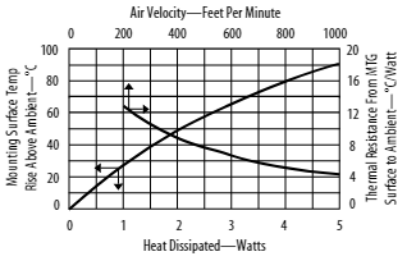

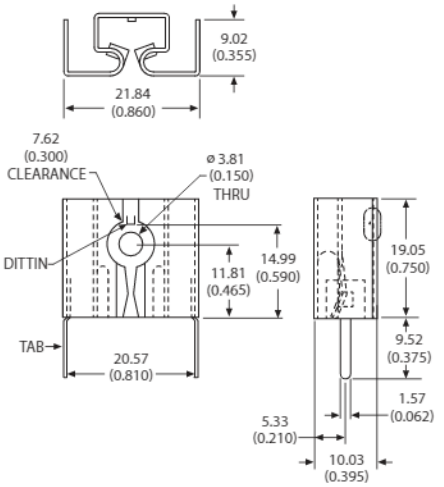

Material: 0.63 (0.025) Thick Aluminum
Finish: Black Anodize

ORDERING INFORMATION

Part Number	Description	Dia of PCB Plated Thru Hole for Tabs
574102B00000G	Low cost slide on heat sink, no solderable tabs	
574102B03300G	With solderable tabs	1.91 (0.075)

POPULAR OPTIONS: 574102B0 00 00G
Base part no. A

Position	Code	Description	Details
A	37	Solderable tab with step to limit insertion depth	Page 92

For additional options see page 82

TO-220 Heat Sinks

5751, 5793, 5794 Snap down style heat sink featuring two side fins

Snap down style heat sink features two side fins that act as springs to hold the semiconductor firmly to the heat sink. Models include an integrated clip and device locking catch for more robust applications. Available for both standard and bevel edged TO-220 packages.

FIGURE A

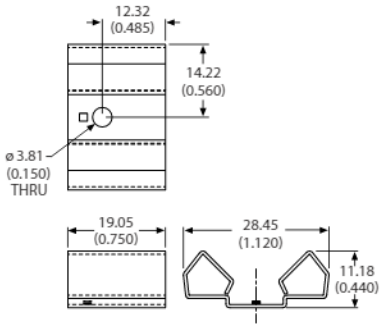

FIGURE B

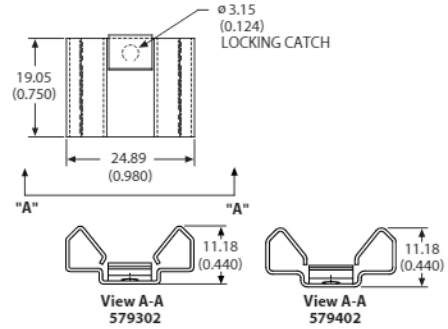

Material: 0.63 (0.025) Thick Aluminum
Finish: Black Anodize

ORDERING INFORMATION

Part Number	Description	Figure
575102B00000G	Snap down heat sink	A
579302B00000G	With integrated clip and locking catch	B
579402B00000G	With integrated clip and locking catch for TO-220 with beveled edge	B

For additional options see page 82

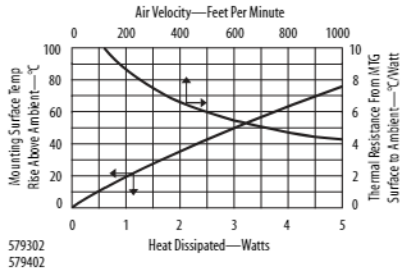

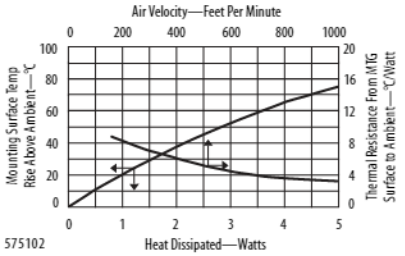

AAVID THERMALLOY
www.aavidthermalloy.com

AMERICA
USA Tel: +1 (603) 224-9988 email: info@aavid.com

EUROPE
Italy Tel: +39 051 764011 email: sales.it@aavid.com
United Kingdom Tel: +44 1793 401400 email: sales.uk@aavid.com

ASIA
Singapore Tel: +65 6362 8388 email: sales@aavid.com.sg
Taiwan Tel: +886(2) 2698-9888 email: sales@aavid.com.tw

6225 Space saving staggered fin heat sink

Grease & Epoxy page112 | Mounting Kits page 99

Space saving staggered fin heat sink for vertical mounting TO-220 devices. Features solderable mounting tabs for easy attachment to the PC board.

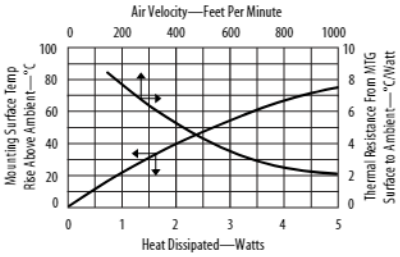

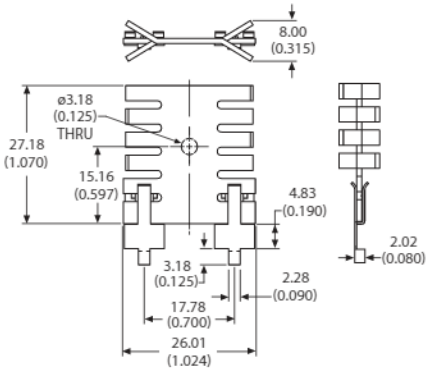

Material: 1.02 (0.040) Thick Aluminum
Finish: Black Anodize

ORDERING INFORMATION

Part Number	Description	Dia of PCB Plated Thru Hole for Tabs
6225B-MTG	Space saving staggered fin heat sink	2.90 (0.114)

For additional options see page 85

6032 Copper, space saving staggered fin heat sink

Grease & Epoxy page112 | Mounting Kits page 99

Copper, space saving staggered fin heat sink for vertical mounting TO-220 devices. Features solderable mounting tabs for easy attachment to the PC board.

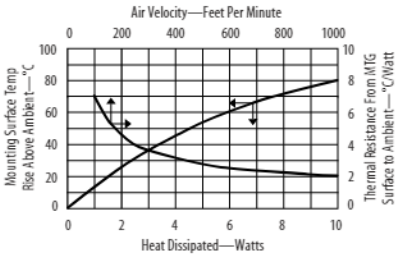

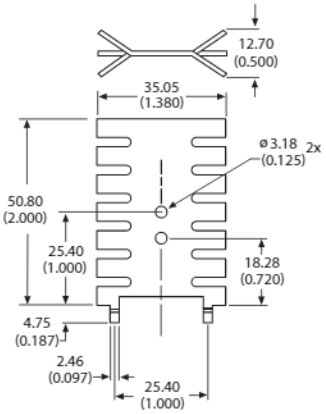

Material: 1.27 (0.050) Thick Copper
Finish: Tin Plated

ORDERING INFORMATION

Part Number	Description	Dia of PCB Plated Thru Hole for Tabs
6032DG	Copper space saving staggered fin heat sink	3.10 (0.122)

6022 Space saving staggered fin heat sink

Grease & Epoxy page112 | Mounting Kits page 99

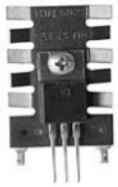

Space saving staggered fin heat sink for vertical mounting TO-220 devices. Features staked on solderable mounting tabs for easy attachment to the PC board.

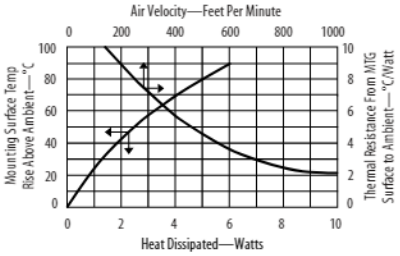

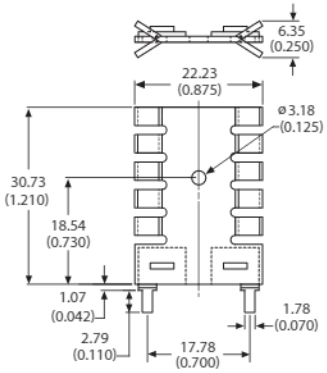

Material: 1.02 (0.040) Thick Aluminum
Finish: See Table

ORDERING INFORMATION

Part Number	Finish	Dia of PCB Plated Thru Hole for Tabs
6022PBG	Pre-black anodize*	2.36 (0.093)
6022BG	Black anodize	2.36 (0.093)

*Edges cut during the manufacturing process will be unfinished. See page 110 for more information

For additional options see page 85

TO-220 Heat Sinks

6232 Space saving staggered fin heat sink

Grease & Epoxy page112 | Mounting Kits page 99

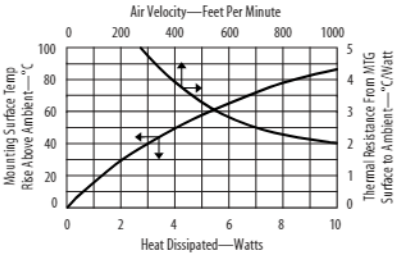

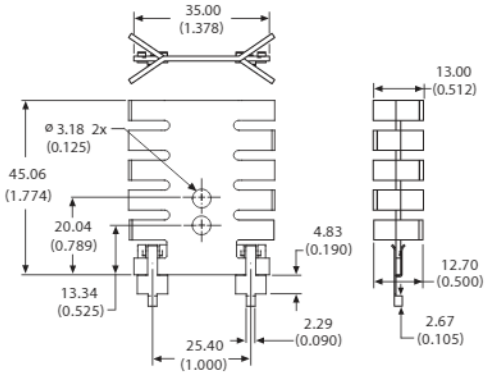

Material: 1.27 (0.050) Thick Aluminum
Finish: See Table

Space saving staggered fin heat sink for vertical mounting TO-220 devices. Features solderable mounting tabs with triangular base for easy attachment to the PC board.

ORDERING INFORMATION

Part Number	Finish	Dia of PCB Plated Thru Hole for Tabs
6232B-MTG	Black anodize	3.10 (0.122)
6232PB-MTG	Pre-black anodize*	3.10 (0.122)

*Edges cut during the manufacturing process will be unfinished. See page 110 for more information

For additional options see page 85

6025 Copper, space saving staggered fin heat sink

Grease & Epoxy page112 | Mounting Kits page 99

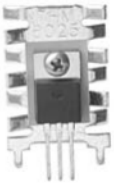

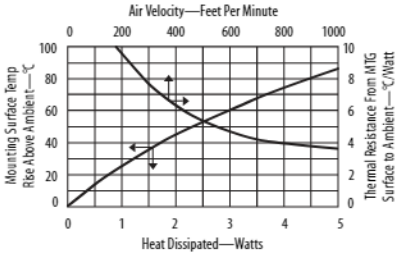

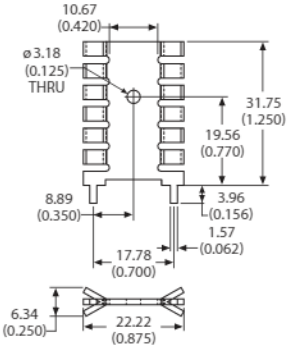

Material: 1.27 (0.050) Thick Copper
Finish: Tin Plated

Copper, space saving staggered fin heat sink for vertical mounting TO-220 devices. Features integrated solderable mounting tabs for easy attachment to the PC board.

ORDERING INFORMATION

Part Number	Description	Dia of PCB Plated Thru Hole for Tabs
6025DG	Copper, space saving staggered fin heat sink with solderable tabs	2.54 (0.100)

For additional options see page 85

5932 Space saving twisted fin heat sink

Grease & Epoxy page112 | Mounting Kits page 99

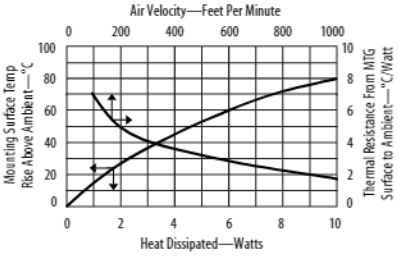

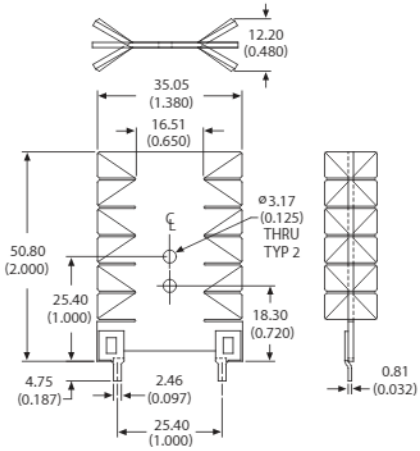

Material: 1.27 (0.050) Thick Aluminum
Finish: Black Anodize

Space saving twisted fin heat sink for vertical mounting TO-220 devices. Features solderable mounting tabs for easy attachment to the PC board.

ORDERING INFORMATION

Part Number	Description	Dia of PCB Plated Thru Hole for Tabs
593202B03500G	Space saving twisted fin heat sink with solderable tabs	2.84 (0.112)

POPULAR OPTIONS: 593202B0 00 00G

Base part no. — A

Position	Code	Description	Details
A	34	Solderable tab for 0.094 plated thru hole	Page 92

For additional options see page 82

AAVID THERMALLOY
www.aavidthermalloy.com

AMERICA
USA Tel: +1 (603) 224-9988 email: info@aavid.com

EUROPE
Italy Tel: +39 051 764011 email: sales.it@aavid.com
United Kingdom Tel: +44 1793 401400 email: sales.uk@aavid.com

ASIA
Singapore Tel: +65 6362 8388 email: sales@aavid.com.sg
Taiwan Tel: +886(2) 2698-9888 email: sales@aavid.com.tw

5425 Space saving staggered fin heat sink

Grease & Epoxy page112

Mounting Kits page 99

Space saving staggered fin heat sink for vertical mounting TO-220 devices. Features integrated solderable mounting tabs that can be twisted for attachment to the PC board. Heat sink is also available with tin plating for soldering directly to the PC board.

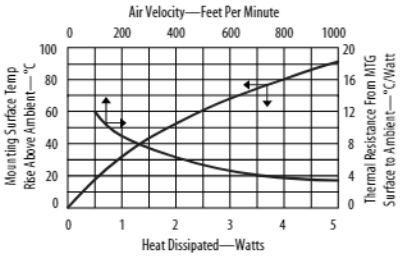

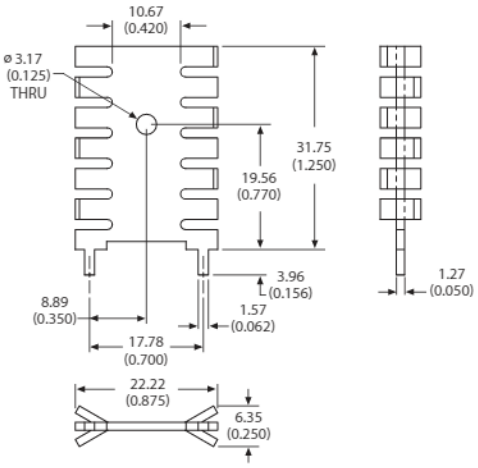

Material: 1.27 (0.050) Thick Aluminum
Finish: See Table

ORDERING INFORMATION

Part Number	Finish	Dia of PCB Plated Thru Hole for Tabs
542502B00000G	Black anodize	2.39 (0.094)
542502D00000G	Tin plated	2.39 (0.094)

For additional options see page 82

5925 Space saving twisted fin heat sink

Grease & Epoxy page112

Mounting Kits page 99

Space savings twisted fin heat sink for vertical mounting TO-220 devices. Features staked on solderable mounting tabs for easy attachment to the PC board.

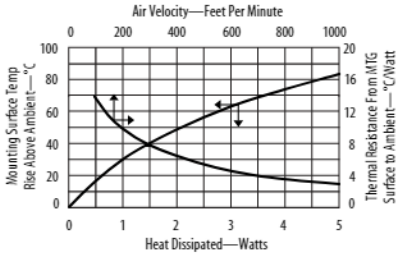

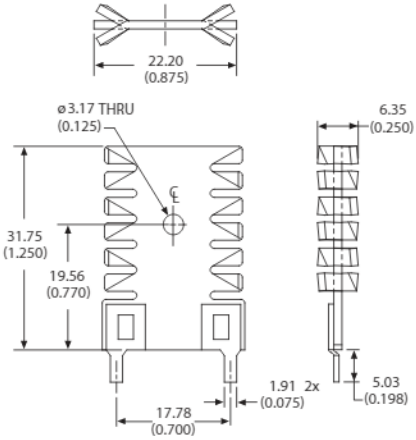

Material: 1.27 (0.050) Thick Aluminum
Finish: See Table

ORDERING INFORMATION

Part Number	Finish	Dia of PCB Plated Thru Hole for Tabs
592502B03400G	Black anodize	2.39 (0.094)
592502U03400G	Unfinished	2.39 (0.094)

For additional options see page 82

TO-220 Heat Sinks

5338, 5339, 5340 Extruded heat sink with radial fins

Grease & Epoxy page112

Extruded heat sink with radial fins and channel clip attach feature make device attachment easy. Includes clip and two solderable mounting pins which permit vertical mounting and eliminate stress on device leads. Available in three heights for TO-220 devices.

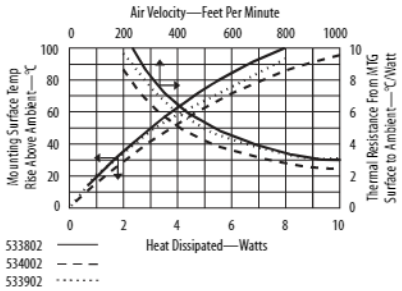

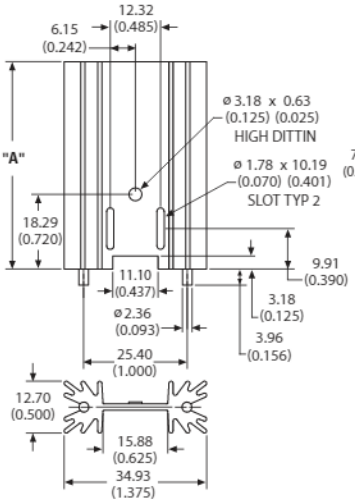

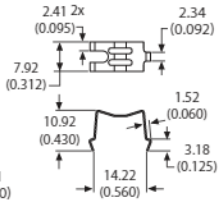

CLIP 54

Material: Aluminum
Finish: Black Anodize

ORDERING INFORMATION

Part Number	"A" Dim	Dia of PCB Plated Thru Hole for Pins
533802B02554G	25.40 (1.000)	2.67 (0.105)
533902B02554G	38.10 (1.500)	2.67 (0.105)
534002B02554G	50.80 (2.000)	2.67 (0.105)

For additional options see page 83

5326, 5327, 5328 High power extruded heat sink with large radial fins

Grease & Epoxy page112
Mounting Kits page 99

High power extruded heat sink with large radial fins and increased fin count for additional cooling capacity. Solderable pins allow vertical mounting without stress on the device leads. Available in three heights for TO-220 devices.

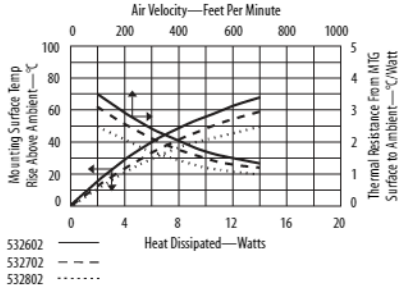

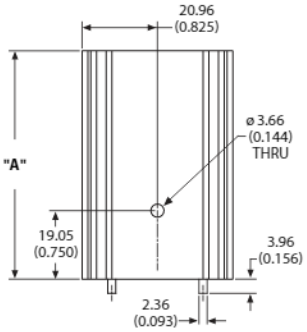

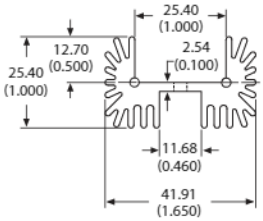

Material: Aluminum
Finish: Black Anodize

ORDERING INFORMATION

Part Number	"A" Dim	Dia of PCB Plated Thru Hole for Pins
532602B02500G	38.10 (1.500)	2.67 (0.105)
532702B02500G	50.80 (2.000)	2.67 (0.105)
532802B02500G	63.50 (2.500)	2.67 (0.105)

For additional options see page 83

ML26AA Extruded channel style heat sink featuring serrated fins

Grease & Epoxy page112
Mounting Kits page 99

Extruded channel style heat sink features serrated fins for increased cooling capacity. The base of the heat sink is notched to clear the device leads when mounted horizontally on the printed circuit card. Narrow channel accommodates a TO-220 device.

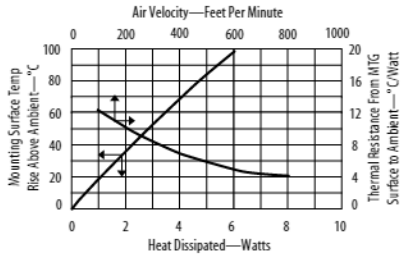

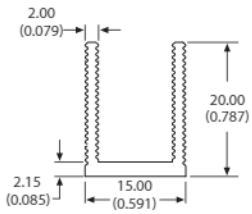

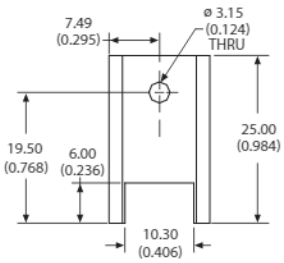

Material: Aluminum
Finish: Black Anodize

ORDERING INFORMATION

Part Number	Description
ML26AAG	Extruded channel style heat sink

AAVID THERMALLOY
www.aavidthermalloy.com

AMERICA
USA Tel: +1 (603) 224-9988 email: info@aavid.com

EUROPE
Italy Tel: +39 051 764011 email: sales.it@aavid.com
United Kingdom Tel: +44 1793 401400 email: sales.uk@aavid.com

ASIA
Singapore Tel: +65 6362 8388 email: sales@aavid.com.sg
Taiwan Tel: +886(2) 2698-9888 email: sales@aavid.com.tw

5912 Plug in style heat sink featuring four spring action clips

Plug in style heat sink features four spring action clips to firmly hold the device to the heat sink ensuring maximum metal to metal thermal contact. Available with solderable mounting tabs for both horizontal and vertical mounting to the PC board.

FIGURE A

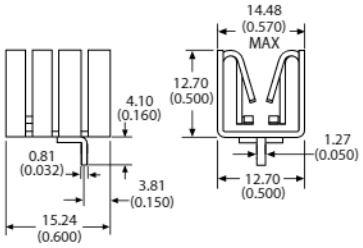

FIGURE B

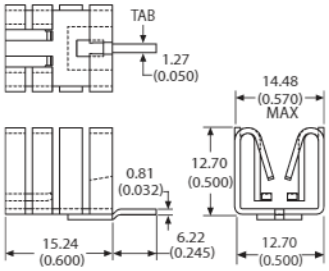

Material: 0.81 (0.032) Thick Aluminum
Finish: Black Anodize

ORDERING INFORMATION

Part Number	Description	Figure	Dia of PCB Plated Thru Hole for Tabs
591202B00000G	Plug in style heat sink, no mounting tab	A	
591202B03100G	With horizontal mounting tab	A	1.73 (0.068)
591202B04000G	With vertical mounting tab	B	1.75 (0.069)

For additional options see page 84

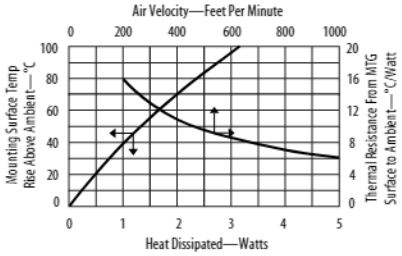

5913 Plug in style heat sink featuring four spring action clips

Plug in style heat sink features four spring action clips to firmly hold the device to the heat sink ensuring maximum metal to metal thermal contact. Includes 2 integrated standoffs to steady the heat sink during wave soldering. Available with solderable mounting tabs for vertical mounting to the PC board.

FIGURE A

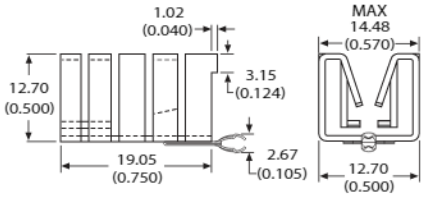

FIGURE B

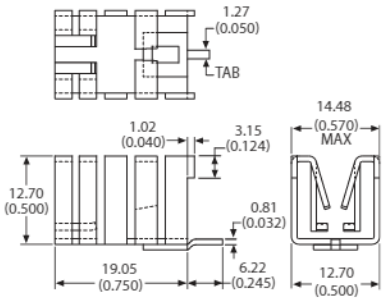

Material: 0.81 (0.032) Thick Aluminum
Finish: Black Anodize

ORDERING INFORMATION

Part Number	Description	Figure	Dia of PCB Plated Thru Hole for Tabs
591302B00000G	Plug in style heat sink with integrated standoffs, no mounting tab	B	
591302B02800G	With Shur-Lock™ tab for vertical mounting	A	1.73 (0.068)
591302B04000G	With tab for vertical mounting	B	1.75 (0.069)

For additional options see page 84

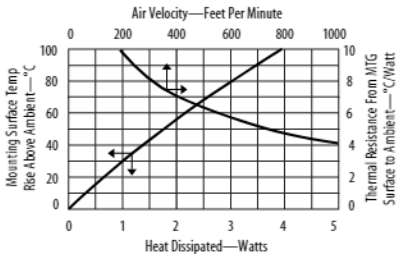

TO-220 & TO-262 Heat Sinks

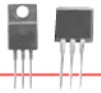

5768 Plug in style heat sink featuring four spring action clips

Plug in style heat sink features four spring action clips to firmly hold the device to the heat sink ensuring maximum metal to metal thermal contact. Available with solderable mounting tabs for both horizontal and vertical mounting to the PC board.

FIGURE A

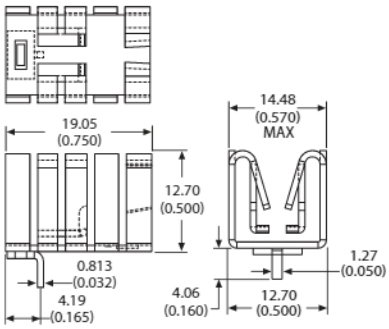

FIGURE B

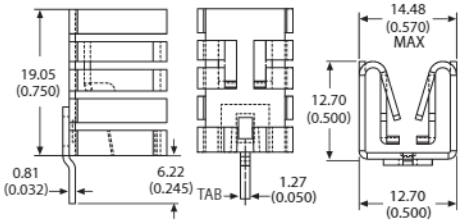

Material: 0.81 (0.032) Thick Aluminum
Finish: See Table

ORDERING INFORMATION

Part Number	Description	Figure	Finish	Dia of PCB Plated Thru Hole for Tabs
576802B00000G	Slim plug in heat sink, no mounting tab	A	Black anodize	
576802V00000G	Slim plug in heat sink, no mounting tab	A	AavSHIELD^3	
576802U00000G	Slim plug in heat sink, no mounting tab	A	Unfinished	
576802B03100G	With single tab for horizontal mounting	A	Black anodize	1.73 (0.068)
576802V03100G	With single tab for horizontal mounting	A	AavSHIELD^3	1.73 (0.068)
576802U03100G	With single tab for horizontal mounting	A	Unfinished	1.73 (0.068)
576802B04000G	With single tab for vertical mounting	B	Black anodize	1.75 (0.069)
576802V04000G	With single tab for vertical mounting	B	AavSHIELD^3	1.75 (0.069)
576802U04000G	With single tab for vertical mounting	B	Unfinished	1.75 (0.069)

For additional options see page 84

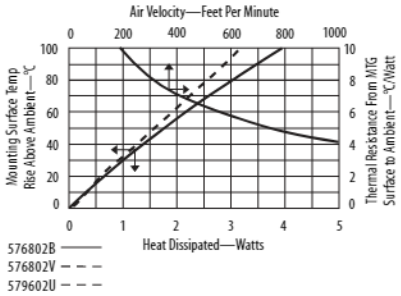

PF432, PF433, PF434, PF435, PF436 Plug in style heat sink features pre-blackened finish

Plug in style heat sink features pre-blackened finish and two spring action clips to firmly hold the device to the heat sink ensuring maximum metal to metal thermal contact. Available with solderable mounting tabs for both horizontal and vertical mounting to the PC board.

FIGURE A

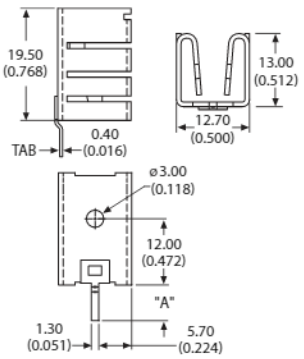

FIGURE B

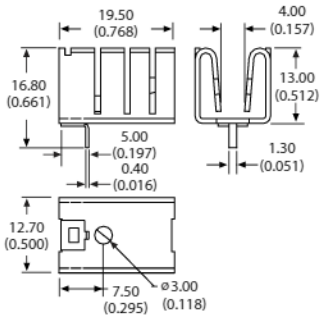

FIGURE C

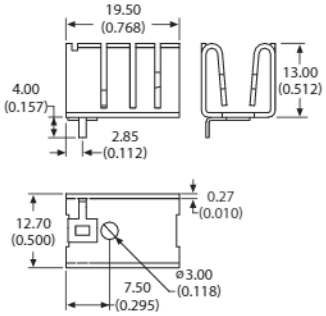

Material: 0.71 (0.028) Thick Aluminum
Finish: Pre-Black Anodize*

ORDERING INFORMATION

Part Number	Description	Figure	Dim "A"	Dia of PCB Plated Thru Hole for Tabs
PF432G	Plug in style heat sink with solderable tab, vertical mount	A	6.20 (0.244)	1.60 (0.063)
PF433G	With vertical mount no tab	A		
PF434G	With solderable tab, horizontal mount	B		1.60 (0.063)
PF435G	With solderable tab, vertical mount	A	9.50 (0.374)	1.60 (0.063)
PF436G	With solderable tab offset from center, horizontal mount	C		1.60 (0.063)

*Edges cut during the manufacturing process will be unfinished.
See page 110 for more information

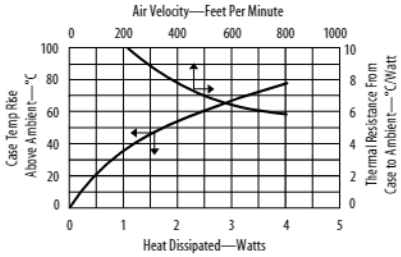

AAVID THERMALLOY
www.aavidthermalloy.com

AMERICA
USA Tel: +1 (603) 224-9988 email: info@aavid.com

EUROPE
Italy Tel: +39 051 764011 email: sales.it@aavid.com
United Kingdom Tel: +44 1793 401400 email: sales.uk@aavid.com

ASIA
Singapore Tel: +65 6362 8388 email: sales@aavid.com.sg
Taiwan Tel: +886(2) 2698-9888 email: sales@aavid.com.tw

5669 Plug in style heat sink with folded back fins

Plug in style heat sink with folded back fins for extra cooling capacity. Features four spring action clips to firmly hold the device to the heat sink ensuring maximum metal to metal thermal contact. Available with or without solderable mounting tabs for both horizontal and vertical mounting to the PC board.

FIGURE A

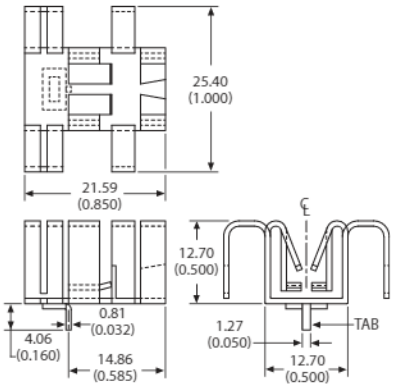

FIGURE B

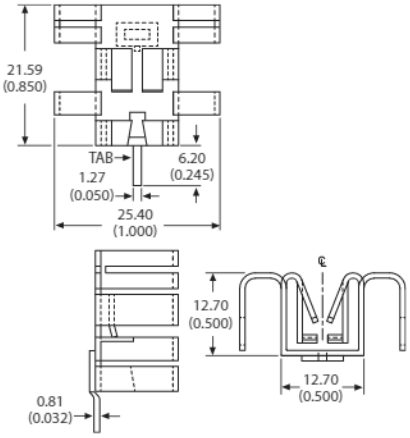

Material: 0.81 (0.032) Thick Aluminum
Finish: Black Anodize

ORDERING INFORMATION

Part Number	Description	Figure	Dia of PCB Plated Thru Hole for Tabs
566902B00000G	Plug in style heat sink with no mounting tab	A	
566902B03100G	With horizontal mounting tab	A	1.73 (0.068)
566902B04000G	With vertical mounting tab	B	1.75 (0.069)

For additional options see page 82

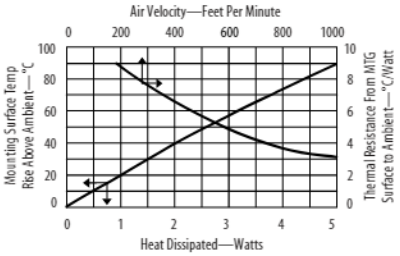

TO-220 & TO-218 & TO-247 Heat Sinks

TV96, TV97 Hat section heat sink with twisted fins

Grease & Epoxy page 112

Mounting Kits page 99

Hat section heat sink with twisted fins is low profile and perfect for use on circuit cards with 0.500 spacing. The twisted fins increase air turbulence for better thermal performance.

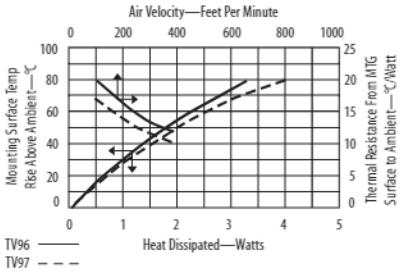

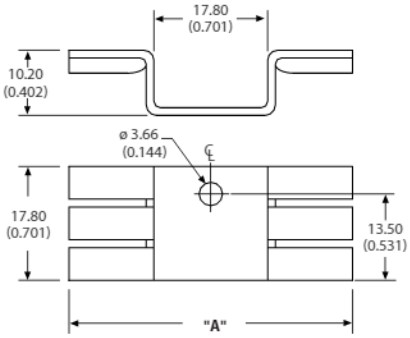

Material: 0.99 (0.039) Thick Aluminum
Finish: Black Anodize

ORDERING INFORMATION

Part Number	"A" Dim
TV96G	31.70 (1.248)
TV97G	44.40 (1.748)

TO-220 & TO-218 & TO-247 Heat Sinks

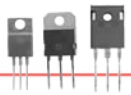

5301 High rise style heat sink features twisted fins and Wave-On™ solderable mounts

Grease & Epoxy page112 | Mounting Kits page 99

High rise style heat sink features twisted fins and Wave-On™ solderable mounts for easy attachment to the PC card. Models include thru holes on one side to attach devices using standard hardware and dittins with special slots on the other for easy device attachment using a convenient spring clip. Dual models use two dittins and clips to locate and attach devices.

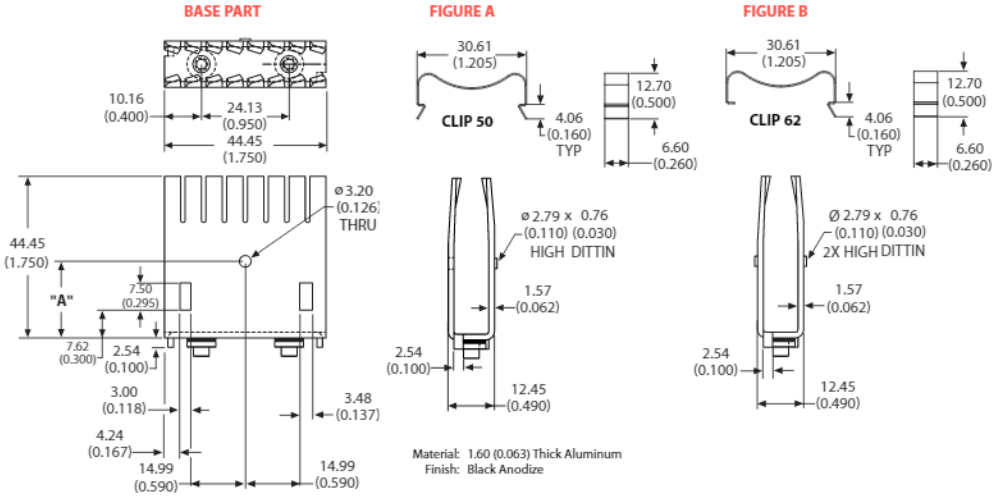

ORDERING INFORMATION

Part Number	Description	Device	Figure	"A" Dim	Dia of PCB Plated Thru Hole for Tabs
530101B00100G	Heat sink twisted fin	TO-218, TO-247		21.08 (0.830)	4.75 (0.187)
530101B00150G	With device clip #50	TO-218, TO-247	A	21.08 (0.830)	4.75 (0.187)
530102B00100G	Heat sink twisted fin	TO-220		18.29 (0.720)	4.75 (0.187)
530102B00150G	With device clip #50	TO-220	A	18.29 (0.720)	4.75 (0.187)
530161B00162G	With two device clips #62	Dual TO-218, TO-247	B	21.08 (0.830)	4.75 (0.187)
530162B00162G	With two device clips #62	Dual TO-220	B	18.29 (0.720)	4.75 (0.187)

For additional options see page 82

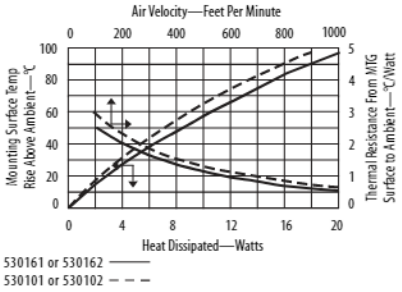

5308 High rise style heat sink features twisted fins and solderable tabs

Grease & Epoxy page112 | Mounting Kits page 99

High rise style heat sink features twisted fins and solderable tabs for easy attachment to the PC card. Models include thru holes on one side to attach devices using standard hardware and dittins with special slots on the other for easy device attachment using a convenient spring clip. Dual models use two dittins and clips to locate and attach devices.

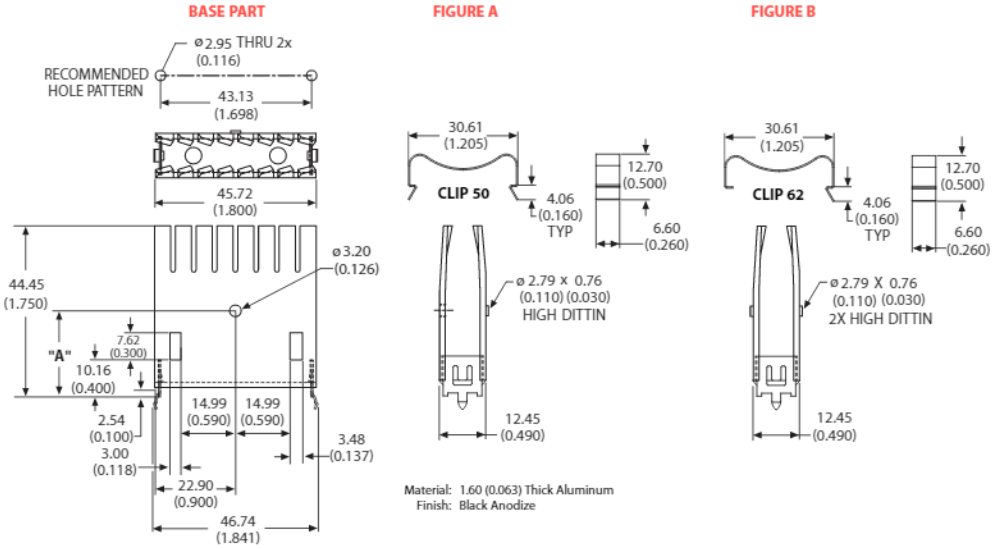

ORDERING INFORMATION

Part Number	Description	Device	Figure	"A" Dim	Dia of PCB Plated Thru Hole for Tabs
530801B05100G	Heat sink twisted fin and solderable tabs	TO-218, TO-247		21.08 (0.830)	2.95 (0.116)
530801B05150G	With device clip #50	TO-218, TO-247	A	21.08 (0.830)	2.95 (0.116)
530802B05100G	Heat sink twisted fin and solderable tabs	TO-220		18.29 (0.720)	2.95 (0.116)
530802B05150G	With device clip #50	TO-220	A	18.29 (0.720)	2.95 (0.116)
530861B05162G	With two device clips #62	Dual TO-218, TO-247	B	21.08 (0.830)	2.95 (0.116)
530862B05162G	With two device clips #62	Dual TO-220	B	18.29 (0.720)	2.95 (0.116)

For additional options see page 82

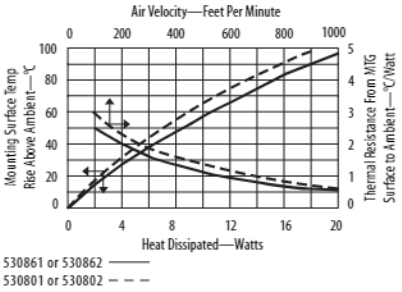

AAVID THERMALLOY
www.aavidthermalloy.com

AMERICA
USA Tel: +1 (603) 224-9988 email: info@aavid.com

EUROPE
Italy Tel: +39 051 764011 email: sales.it@aavid.com
United Kingdom Tel: +44 1793 401400 email: sales.uk@aavid.com

ASIA
Singapore Tel: +65 6362 8388 email: sales@aavid.com.sg
Taiwan Tel: +886(2) 2698-9888 email: sales@aavid.com.tw

5304 High rise style heat sink features staggered fins and Wave-On™ solderable mounts

Grease & Epoxy page112

Mounting Kits page 99

High rise style heat sink features staggered fins and Wave-On™ solderable mounts for easy attachment to the PC card. Models include thru holes on one side to attach devices using standard hardware and dittins with special slots on the other for easy device attachment using a convenient spring clip.

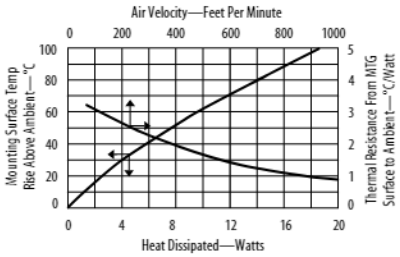

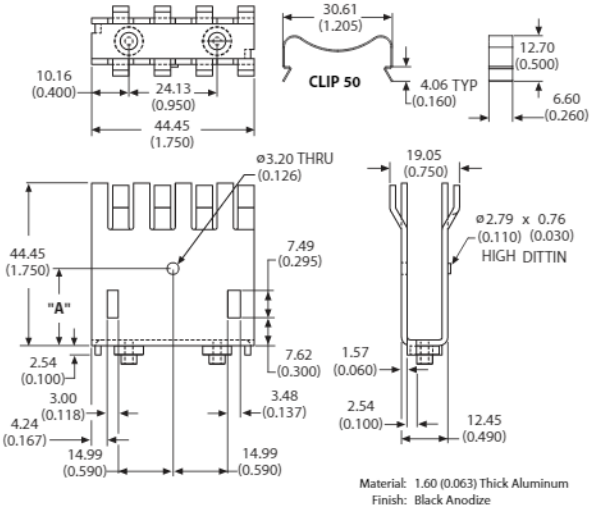

ORDERING INFORMATION

Part Number	Description	Device	"A" Dim	Dia of PCB Plated Thru Hole for Tabs
530401B00100G	High rise style heat sink staggered fins	TO-218, TO-247	21.08 (0.830)	4.75 (0.187)
530401B00150G	With device clip #50	TO-218, TO-247	21.08 (0.830)	4.75 (0.187)
530402B00100G	High rise style heat sink staggered fins	TO-220	18.29 (0.720)	4.75 (0.187)
530402B00150G	With device clip #50	TO-220	18.29 (0.720)	4.75 (0.187)

For additional options see page 82

5330, 5331, 5332, 5333 Extruded heat sink with radial fins

Grease & Epoxy page112

Extruded heat sink with radial fins and clip attach feature makes device attachment easy. Includes two solderable mounting pins which permit vertical mounting and eliminate stress on device leads. Available in four heights for TO-220, TO-218 and TO-247 devices.

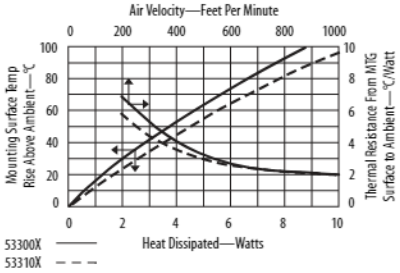

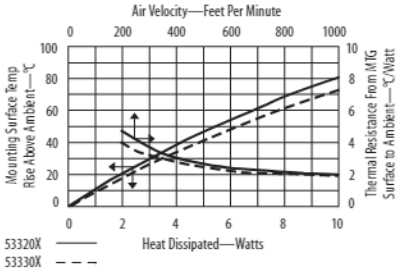

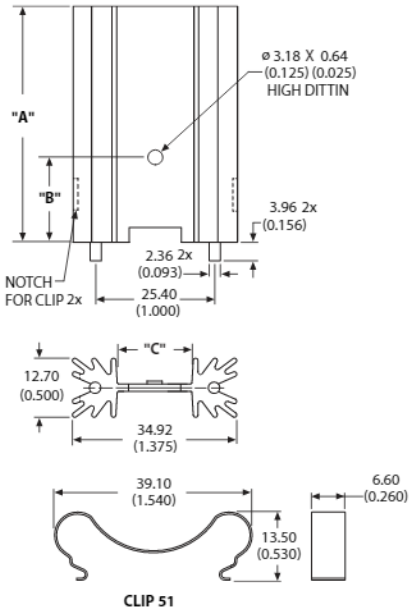

ORDERING INFORMATION

Part Number	Device	"A" Dim	"B" Dim	"C" Dim	Dia of PCB Plated Thru Hole for Pins
533001B02551G	TO-218, TO-247	25.40 (1.000)	21.59 (0.850)	17.02 (0.670)	2.67 (0.105)
533002B02551G	TO-220	25.40 (1.000)	18.29 (0.720)	15.88 (0.625)	2.67 (0.105)
533101B02551G	TO-218, TO-247	38.10 (1.500)	21.59 (0.850)	17.02 (0.670)	2.67 (0.105)
533102B02551G	TO-220	38.10 (1.500)	18.29 (0.720)	15.88 (0.625)	2.67 (0.105)
533201B02551G	TO-218, TO-247	50.80 (2.000)	21.59 (0.850)	17.02 (0.670)	2.67 (0.105)
533202B02551G	TO-220	50.80 (2.000)	18.29 (0.720)	15.88 (0.625)	2.67 (0.105)
533301B02551G	TO-218, TO-247	63.50 (2.500)	21.59 (0.850)	17.02 (0.670)	2.67 (0.105)
533302B02551G	TO-220	63.50 (2.500)	18.29 (0.720)	15.88 (0.625)	2.67 (0.105)

For additional options see page 83

TO-220 & TO-218 & TO-247 Heat Sinks

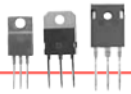

SW25, SW38, SW50, SW63 — Extruded heat sink with unequal channel widths

Grease & Epoxy page 112 | Mounting Kits page 99

Extruded heat sink with unequal channel widths front and back can accommodate a TO-220, TO-218, or TO-247 devices. Includes two solderable mounting pins which permit vertical mounting and eliminate stress on device leads. Available in three heights. Version without hole uses clip 5901 (sold separately) to attach device. See page 97 for clip information.

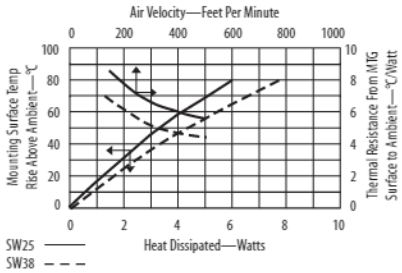

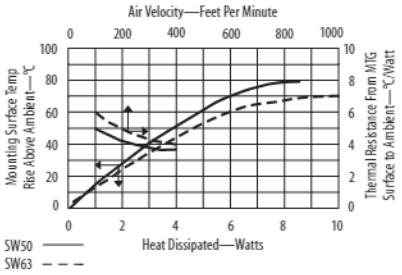

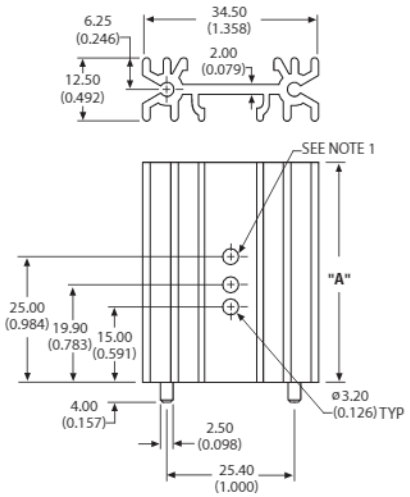

NOTE 1: This hole not present in SW25 model

Material: Aluminum
Finish: Black Anodize

ORDERING INFORMATION

Part Number	Description	"A" Dim	Holes	Dia of PCB Plated Thru Hole for Pins
SW25-2G	Extruded heat sink with unequal channel widths front and back	25.00 (0.984)	No	3.00 (0.118)
SW25-4G	With device mounting holes	25.00 (0.984)	Yes	3.00 (0.118)
SW38-2G	Extruded heat sink with unequal channel widths front and back	38.00 (1.496)	No	3.00 (0.118)
SW38-4G	With device mounting holes	38.00 (1.496)	Yes	3.00 (0.118)
SW50-2G	Extruded heat sink with unequal channel widths front and back	50.00 (1.968)	No	3.00 (0.118)
SW50-4G	With device mounting holes	50.00 (1.968)	Yes	3.00 (0.118)
SW63-2G	Extruded heat sink with unequal channel widths front and back	63.00 (2.480)	No	3.00 (0.118)
SW63-4G	With device mounting holes	63.00 (2.480)	Yes	3.00 (0.118)

5297, 5298, 5299, 5300 — Extruded heat sink with large radial fins

Grease & Epoxy page 112 | Mounting Kits page 99

Extruded heat sink with large radial fins features equal channel widths on both sides for single or dual device mounting. Includes two solderable mounting pins which permit vertical mounting and eliminate stress on device leads. Available in four heights for TO-220, TO-218, and TO-247 devices.

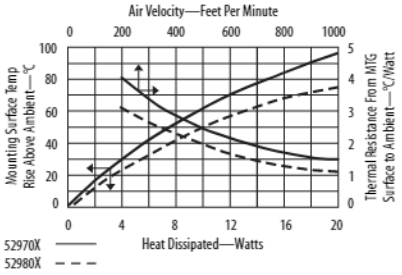

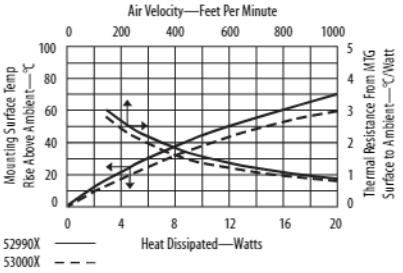

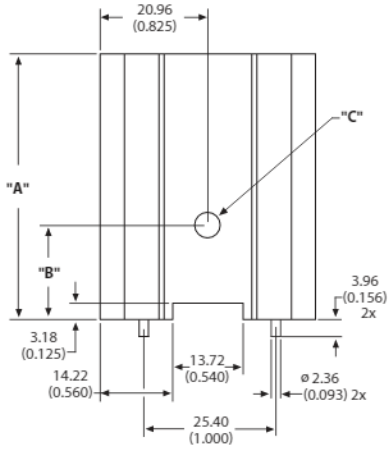

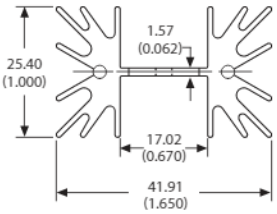

Material: Aluminum
Finish: Black Anodize

ORDERING INFORMATION

Part Number	Device	"A" Dim	"B" Dim	"C" Dim	Dia of PCB Plated Thru Hole for Pins
529701B02500G	TO-218, TO-247	25.40 (1.000)	21.59 (0.850)	3.66 (0.144)	2.67 (0.105)
529702B02500G	TO-220	25.40 (1.000)	18.29 (0.720)	3.17 (0.125)	2.67 (0.105)
529801B02500G	TO-218, TO-247	38.10 (1.500)	21.59 (0.850)	3.66 (0.144)	2.67 (0.105)
529802B02500G	TO-220	38.10 (1.500)	18.29 (0.720)	3.17 (0.125)	2.67 (0.105)
529901B02500G	TO-218, TO-247	50.80 (2.000)	21.59 (0.850)	3.66 (0.144)	2.67 (0.105)
529902B02500G	TO-220	50.80 (2.000)	18.29 (0.720)	3.17 (0.125)	2.67 (0.105)
530001B02500G	TO-218, TO-247	63.50 (2.500)	21.59 (0.850)	3.66 (0.144)	2.67 (0.105)
530002B02500G	TO-220	63.50 (2.500)	18.29 (0.720)	3.17 (0.125)	2.67 (0.105)

For additional options see page 83

AAVID THERMALLOY
www.aavidthermalloy.com

AMERICA
USA Tel: +1 (603) 224-9988 email: info@aavid.com

EUROPE
Italy Tel: +39 051 764011 email: sales.it@aavid.com
United Kingdom Tel: +44 1793 401400 email: sales.uk@aavid.com

ASIA
Singapore Tel: +65 6362 8388 email: sales@aavid.com.sg
Taiwan Tel: +886(2) 2698-9888 email: sales@aavid.com.tw

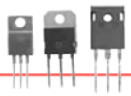

5334, 5335, 5336, 5337 Extruded heat sink with large radial fins

Grease & Epoxy page112

Extruded heat sink with large radial fins and channel clip attach feature makes device attachment easy. Includes clip and two solderable mounting pins which permit vertical mounting and eliminate stress on device leads. Available in four heights for TO-220, TO-218, and TO-247 devices.

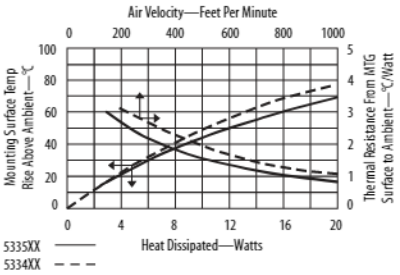

SEE NOTE 1

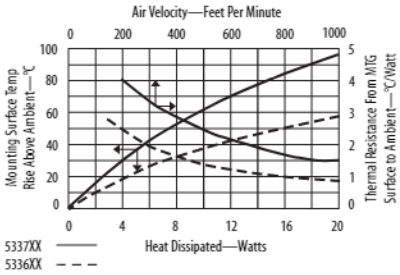

SEE NOTE 1

NOTE 1: Graph depicts single device models. Dual device models exhibit a 15% performance increase.

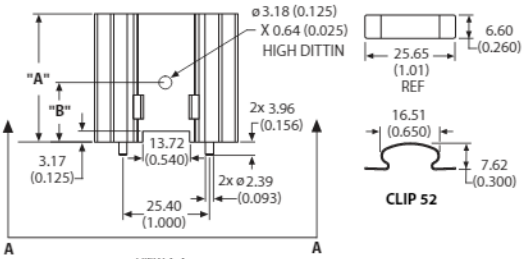

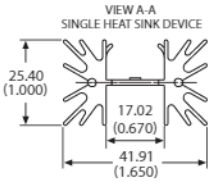

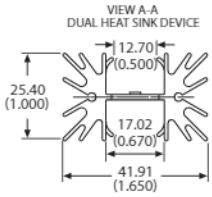

Material: Aluminum
Finish: Black Anodize

ORDERING INFORMATION

Part Number	Device	Description	"A" Dim	"B" Dim	Dia of PCB Plated Thru Hole for Pins
533401B02552G	TO-218, TO-247	Extruded heat sink with radial fins and device clip #52	38.10 (1.500)	21.59 (0.850)	2.67 (0.105)
533402B02552G	TO-220	Extruded heat sink with radial fins and device clip #52	38.10 (1.500)	18.29 (0.720)	2.67 (0.105)
533421B02552G	Dual TO-218, TO-247	With 2 device clips #52	38.10 (1.500)	21.59 (0.850)	2.67 (0.105)
533422B02552G	Dual TO-220	With 2 device clips #52	38.10 (1.500)	18.29 (0.720)	2.67 (0.105)
533501B02552G	TO-218, TO-247	Extruded heat sink with radial fins and device clip #52	50.80 (2.000)	21.59 (0.850)	2.67 (0.105)
533502B02552G	TO-220	Extruded heat sink with radial fins and device clip #52	50.80 (2.000)	18.29 (0.720)	2.67 (0.105)
533521B02552G	Dual TO-218, TO-247	With 2 device clips #52	50.80 (2.000)	21.59 (0.850)	2.67 (0.105)
533522B02552G	Dual TO-220	With 2 device clips #52	50.80 (2.000)	18.29 (0.720)	2.67 (0.105)
533601B02552G	TO-218, TO-247	Extruded heat sink with radial fins and device clip #52	63.50 (2.500)	21.59 (0.850)	2.67 (0.105)
533602B02552G	TO-220	Extruded heat sink with radial fins and device clip #52	63.50 (2.500)	18.29 (0.720)	2.67 (0.105)
533621B02552G	Dual TO-218, TO-247	With 2 device clips #52	63.50 (2.500)	21.59 (0.850)	2.67 (0.105)
533622B02552G	Dual TO-220	With 2 device clips #52	63.50 (2.500)	18.29 (0.720)	2.67 (0.105)
533701B02552G	TO-218, TO-247	Extruded heat sink with radial fins and device clip #52	25.40 (1.000)	21.59 (0.850)	2.67 (0.105)
533702B02552G	TO-220	Extruded heat sink with radial fins and device clip #52	25.40 (1.000)	18.29 (0.720)	2.67 (0.105)
533721B02552G	Dual TO-218, TO-247	With 2 device clips #52	25.40 (1.000)	21.59 (0.850)	2.67 (0.105)
533722B02552G	Dual TO-220	With 2 device clips #52	25.40 (1.000)	18.29 (0.720)	2.67 (0.105)

For additional options see page 83

TO-220 & TO-218 & TO-247 Heat Sinks

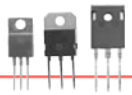

BW38, BW50, BW63 Wide extruded heat sink with unequal channel

Grease & Epoxy page112
Mounting Kits page 99

Wide extruded heat sink with unequal channel widths on front and back can accommodate a TO-220, TO-218, or TO-247 device. Includes two solderable mounting pins which permit vertical mounting and eliminate stress on device leads. Available in three heights. Versions without hole use clip 6801 (sold separately) to attach device. See page 97 for clip information.

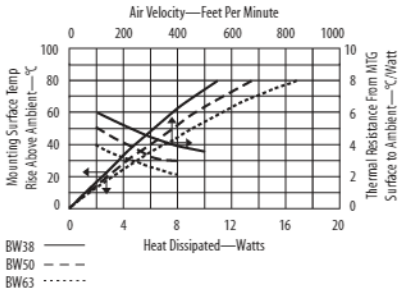

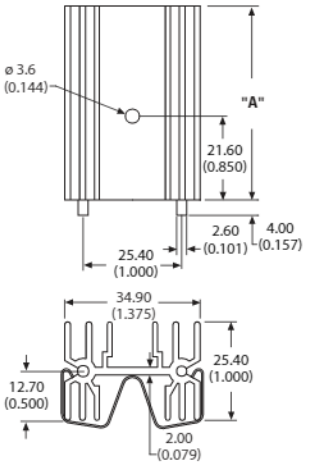

Material: Aluminum
Finish: Black Anodize

ORDERING INFORMATION

Part Number	Description	"A" Dim	Holes	Dia of PCB Plated Thru Hole for Pins
BW38-2G	Extruded heat sink with unequal channel widths front and back	38.00 (1.496)	No	3.00 (0.118)
BW38-4G	With device mounting hole	38.00 (1.496)	Yes	3.00 (0.118)
BW50-2G	Extruded heat sink with unequal channel widths front and back	50.00 (1.968)	No	3.00 (0.118)
BW50-4G	With device mounting hole	50.00 (1.968)	Yes	3.00 (0.118)
BW63-2G	Extruded heat sink with unequal channel widths front and back	63.00 (2.480)	No	3.00 (0.118)
BW63-4G	With device mounting hole	63.00 (2.480)	Yes	3.00 (0.118)

5130, 5131, 5132, 5133 Extruded heat sink with radial fins

Grease & Epoxy page112
Mounting Kits page 99

Extruded heat sink with radial fins feature equal channel widths on both sides for single or dual device mounting. Includes two solderable mounting pins which permit vertical mounting and eliminate stress on device leads. Available in four heights for TO-220,TO-218, and TO-247 devices.

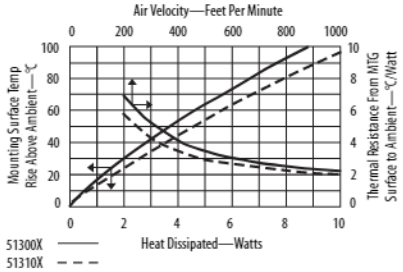

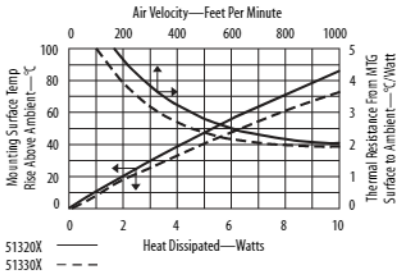

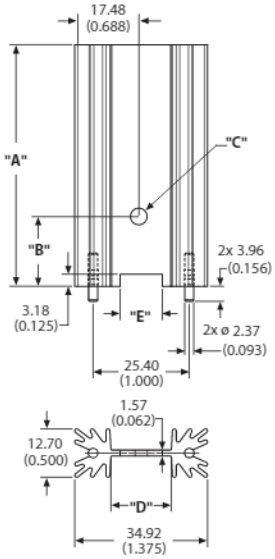

Material: Aluminum
Finish: Black Anodize

ORDERING INFORMATION

Part Number	Device	"A" Dim	"B" Dim	"C" Dim	"D" Dim	"E" Dim	Dia of PCB Plated Thru Hole for Pins
513001B02500G	TO-218, TO-247	25.40 (1.000)	21.59 (0.850)	3.66 (0.144)	17.02 (0.670)	13.72 (0.540)	2.67 (0.105)
513002B02500G	TO-220	25.40 (1.000)	18.29 (0.720)	3.17 (0.125)	15.88 (0.625)	11.10 (0.437)	2.67 (0.105)
513101B02500G	TO-218, TO-247	38.10 (1.500)	21.59 (0.850)	3.66 (0.144)	17.02 (0.670)	13.72 (0.540)	2.67 (0.105)
513102B02500G	TO-220	38.10 (1.500)	18.29 (0.720)	3.17 (0.125)	15.88 (0.625)	11.10 (0.437)	2.67 (0.105)
513201B02500G	TO-218, TO-247	50.80 (2.000)	21.59 (0.850)	3.66 (0.144)	17.02 (0.670)	13.72 (0.540)	2.67 (0.105)
513202B02500G	TO-220	50.80 (2.000)	18.29 (0.720)	3.17 (0.125)	15.88 (0.625)	11.10 (0.437)	2.67 (0.105)
513301B02500G	TO-218, TO-247	63.50 (2.500)	21.59 (0.850)	3.66 (0.144)	17.02 (0.670)	13.72 (0.540)	2.67 (0.105)
513302B02500G	TO-220	63.50 (2.500)	18.29 (0.720)	3.17 (0.125)	15.88 (0.625)	11.10 (0.437)	2.67 (0.105)

For additional options see page 83

AAVID THERMALLOY
www.aavidthermalloy.com
AMERICA USA Tel: +1 (603) 224-9988 email: info@aavid.com
EUROPE Italy Tel: +39 051 764011 email: sales.it@aavid.com
United Kingdom Tel: +44 1793 401400 email: sales.uk@aavid.com
ASIA Singapore Tel: +65 6362 8388 email: sales@aavid.com.sg
Taiwan Tel: +886(2) 2698-9888 email: sales@aavid.com.tw

5310, 5311, 5312, 5313 Extruded heat sink with radial fins & notched base

Grease & Epoxy page 112

Mounting Kits page 99

Extruded heat sink with radial fins and notched base features equal channel widths on both sides and mounting holes to accomodate TO-220 and TO-202 devices. Includes two solderable mounting pins which permit vertical mounting and eliminate stress on device leads. Available in four heights.

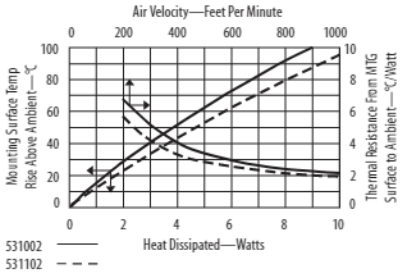

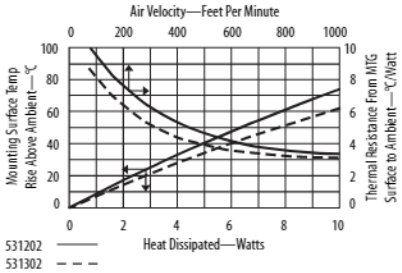

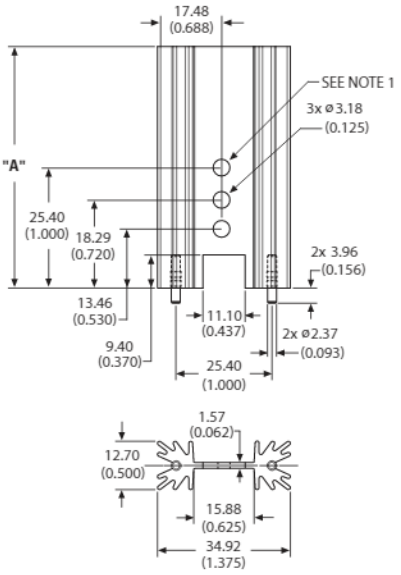

NOTE 1: This hole not present in 5310 series

Material: Aluminum
Finish: See Table

ORDERING INFORMATION

Part Number	"A" Dim	Finish	Dia of PCB Plated Thru Hole for Pins
531002B02500G	25.40 (1.000)	Black anodize	2.67 (0.105)
531002V02500G	25.40 (1.000)	AavSHIELD^3	2.67 (0.105)
531102B02500G	38.10 (1.500)	Black anodize	2.67 (0.105)
531102V02500G	38.10 (1.500)	AavSHIELD^3	2.67 (0.105)
531202B02500G	50.80 (2.000)	Black anodize	2.67 (0.105)
531202V02500G	50.80 (2.000)	AavSHIELD^3	2.67 (0.105)
531302B02500G	63.50 (2.500)	Black anodize	2.67 (0.105)
531302V02500G	63.50 (2.500)	AavSHIELD^3	2.67 (0.105)

For additional options see page 83

SW25-6, SW38-6 Extruded heat sink with unequal channel widths

Grease & Epoxy page 112

Mounting Kits page 99

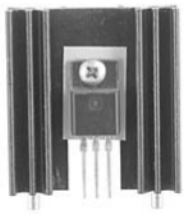

Extruded heat sink with unequal channel widths front and back can accommodate a TO-220 or TO-202 device. Includes two solderable mounting pins which permit vertical mounting and eliminate stress on device leads. Clip 5901 (sold separately) can be used to attach device. See page 97 for clip information.

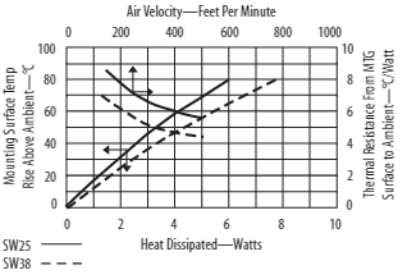

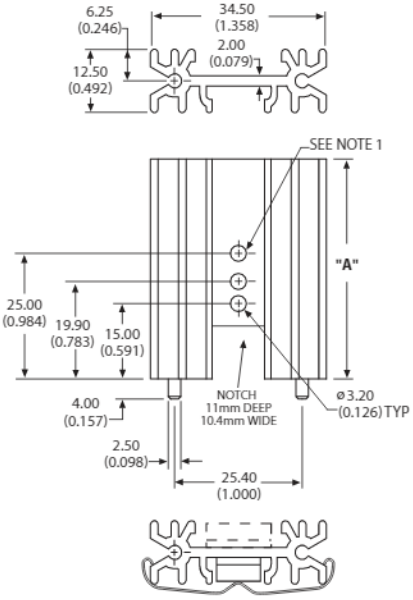

NOTE 1: This hole not present in SW25 series

Material: Aluminum
Finish: Black Anodize

ORDERING INFORMATION

Part Number	Description	"A" Dim	Dia of PCB Plated Thru Hole for Pins
SW25-6G	Extruded heat sink with unequal channel widths front and back	25.00 (0.984)	3.00 (0.118)
SW38-6G	Extruded heat sink with unequal channel widths front and back.	38.00 (1.496)	3.00 (0.118)

TO-220 & TO-218 & TO-247 & Multiwatt Heat Sinks

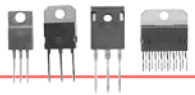

6396, 6398, 6399, 6400 High power extruded heat sink with large radial fins

Grease & Epoxy page112 | Mounting Kits page 99

High power extruded heat sink with large radial fins and solderable shoulder pins allows vertical mounting without stress on the device leads. Available with shoulder pins to provide fixed clearance between the bottom of the heat sink and the board. Available in four heights for TO-220, TO-218, TO-247and multiwatt devices.

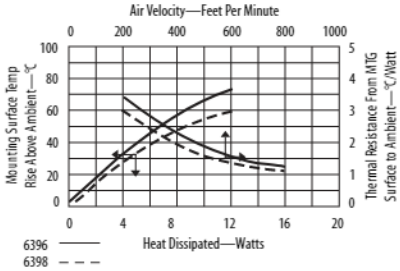

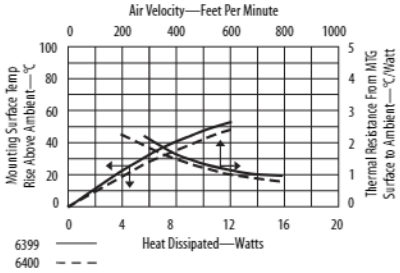

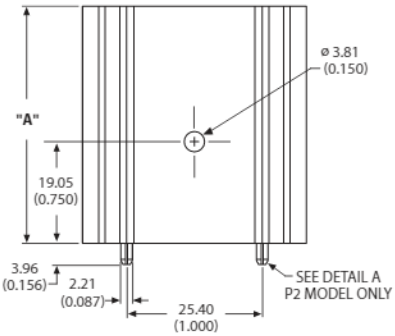

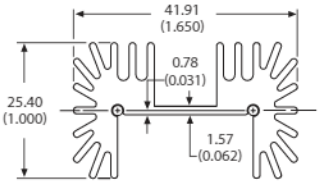

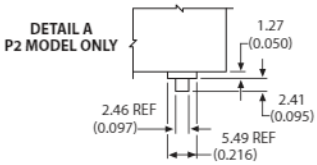

Material: Aluminum
Finish: Black Anodize

ORDERING INFORMATION

Part Number	Description	"A" Dim	Dia of PCB Plated Thru Hole for Pins
6396BG	Extruded heat sink with large radial fins and straight pins	25.40 (1.000)	2.89 (0.114)
6396B-P2G	With solderable shoulder pins	25.40 (1.000)	3.10 (0.122)
6398BG	Extruded heat sink with large radial fins and straight pins	38.10 (1.500)	2.89 (0.114)
6398B-P2G	With solderable shoulder pins	38.10 (1.500)	3.10 (0.122)
6399BG	Extruded heat sink with large radial fins and straight pins	50.80 (2.000)	2.89 (0.114)
6399B-P2G	With solderable shoulder pins	50.80 (2.000)	3.10 (0.122)
6400BG	Extruded heat sink with large radial fins and straight pins	63.50 (2.500)	2.89 (0.114)
6400B-P2G	With solderable shoulder pins	63.50 (2.500)	3.10 (0.122)

For additional options see page 85

6380, 6381, 6382 High power extruded heat sink

Grease & Epoxy page112 | Mounting Kits page 99

High power extruded heat sink for SIP packages. Solderable pins allow vertical mounting without stress on the device leads. Available in three heights. Can also be used for dual TO-220, TO-218, TO-247 and multiwatt devices.

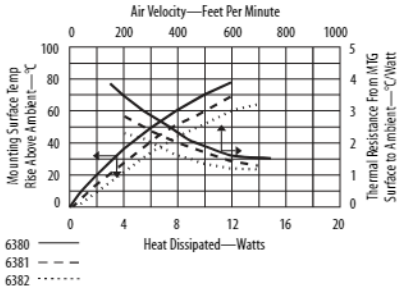

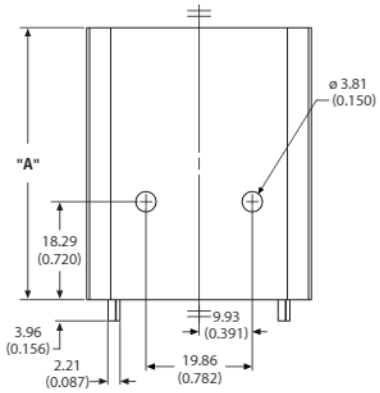

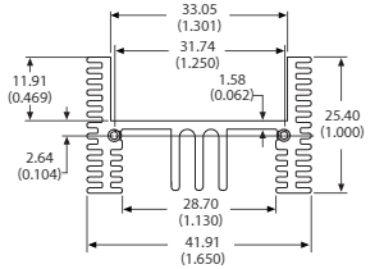

Material: Aluminum
Finish: Black Anodize

ORDERING INFORMATION

Part Number	Description	"A" Dim	Dia of PCB Plated Thru Hole for Pins
6380BG	Extruded heat sink with solderable pins	25.40 (1.000)	2.89 (0.114)
6381BG	Extruded heat sink with solderable pins	38.10 (1.500)	2.89 (0.114)
6382BG	Extruded heat sink with solderable pins	50.80 (2.000)	2.89 (0.114)

For additional options see page 85

AAVID THERMALLOY
www.aavidthermalloy.com

AMERICA
USA Tel: +1 (603) 224-9988 email: info@aavid.com

EUROPE
Italy Tel: +39 051 764011 email: sales.it@aavid.com
United Kingdom Tel: +44 1793 401400 email: sales.uk@aavid.com

ASIA
Singapore Tel: +65 6362 8388 email: sales@aavid.com.sg
Taiwan Tel: +886(2) 2698-9888 email: sales@aavid.com.tw

6374 Extruded heat sink for SIP packages

Grease & Epoxy page112 | Mounting Kits page 99

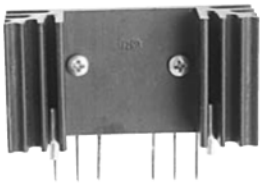

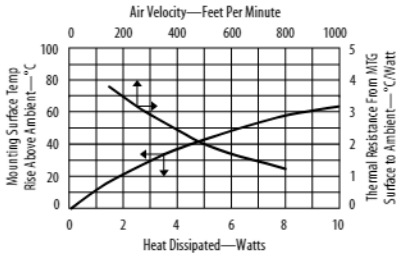

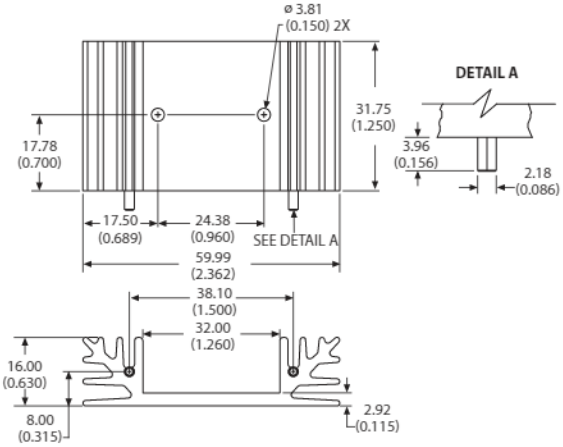

Extruded heat sink for SIP packages. Solderable pins allow vertical mounting without stress on the device leads. Can also be used for dual TO-220, TO-218, TO-247, and multiwatt devices.

ORDERING INFORMATION

Part Number	Description	Dia of PCB Plated Thru Hole for Pins
6374BG	Extruded heat sink with solderable pins	2.89 (0.114)

For additional options see page 85

Material: Aluminum
Finish: Black Anodize

YB32-4 High power flat back extruded channel style heat sink

Grease & Epoxy page112 | Mounting Kits page 99

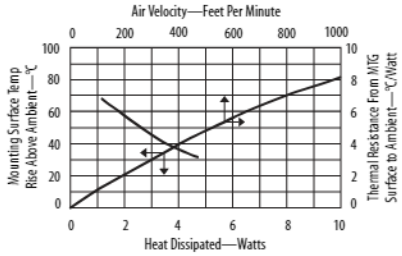

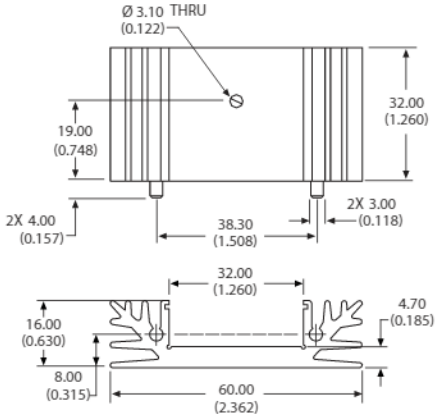

High power flat back extruded channel style heat sink features a wide channel to accommodate several devices. Includes two solderable pins to allow vertical mounting without stress on the device leads. Can be used with TO-220, TO-218, TO-247, and multiwatt devices.

ORDERING INFORMATION

Part Number	Description	Dia of PCB Plated Thru Hole for Pins
YB32-4G	High power flat back extruded heat sink	3.48 (0.137)

Material: Aluminum
Finish: Black Anodize

5810, 5811, 5812 Flat back extruded heat sink featuring solderable pins

Grease & Epoxy page112 | Mounting Kits page 99

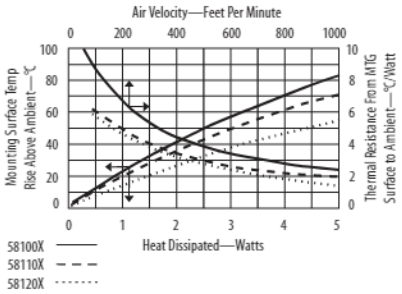

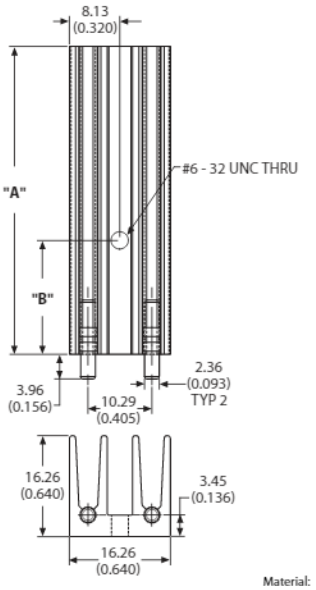

Flat back extruded heat sink features solderable pins which allow vertical mounting without stess on the device leads. Available in three heights for TO-220 and TO-218 devices.

ORDERING INFORMATION

Part Number	Device	"A" Dim	"B" Dim	Dia of PCB Plated Thru Hole for Pins
581001B02500G	TO-218	25.40 (1.000)	21.59 (0.850)	2.67 (0.105)
581002B02500G	TO-220	25.40 (1.000)	18.29 (0.720)	2.67 (0.105)
581101B02500G	TO-218	38.10 (1.500)	21.59 (0.850)	2.67 (0.105)
581102B02500G	TO-220	38.10 (1.500)	18.29 (0.720)	2.67 (0.105)
581201B02500G	TO-218	50.80 (2.000)	21.59 (0.850)	2.67 (0.105)
581202B02500G	TO-220	50.80 (2.000)	18.29 (0.720)	2.67 (0.105)

For additional options see page 83

Material: Aluminum
Finish: Black Anodize

TO-218 Heat Sinks

5922 Plug in style heat sink

Mounting Kits page 99

Plug in style heat sink requires no hardware to attach to the device. The four spring action clips apply even pressure eliminating gaps between the heat sink and device which rob thermal performance.

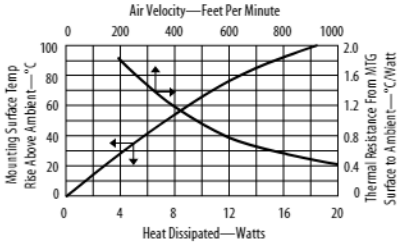

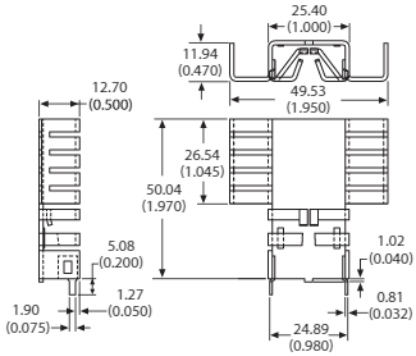

Material: 1.27 (0.050) Thick Aluminum
Finish: Black Anodize

ORDERING INFORMATION

Part Number	Description	Dia of PCB Plated Thru Hole for Tabs
592201B03400G	High power plug in heat sink with folded back fins and solderable mounting tabs	2.39 (0.094)

For additional options see page 82

5931 Channel style heat sink with folded back fins

Grease & Epoxy page 112
Mounting Kits page 99

Channel style heat sink with folded back fins for extra cooling capacity. The heat sink features solderable tabs for easy attachment to the PC board.

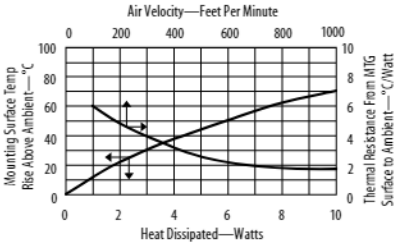

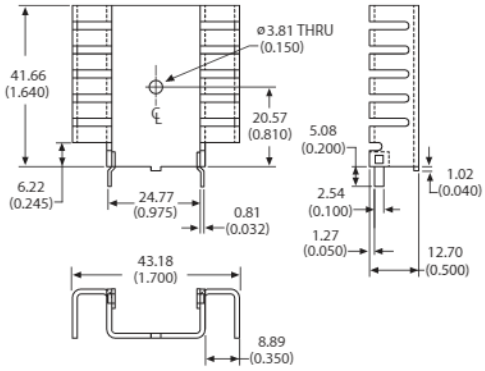

Material: 1.27 (0.050) Thick Aluminum
Finish: Black Anodize

ORDERING INFORMATION

Part Number	Description	Dia of PCB Plated Thru Hole for Tabs
593101B03600G	Channel style heat sink with folded back fins and solderable tabs	2.92 (0.115)

POPULAR OPTIONS: 593101B 0 0000G

Base part no. — A

Position	Code	Description	Details
A	1	Kon-Dux™ pad	Page 86
A	3	In-Sil-8™ pad	Page 86

For additional options see page 82

7130 Copper slide on heat sink

Copper slide on heat sink requires no hardware to attach the device. In addition, the copper heat sink is tin/lead plated to allow easy soldering to the PC board.

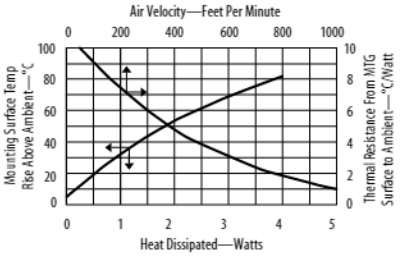

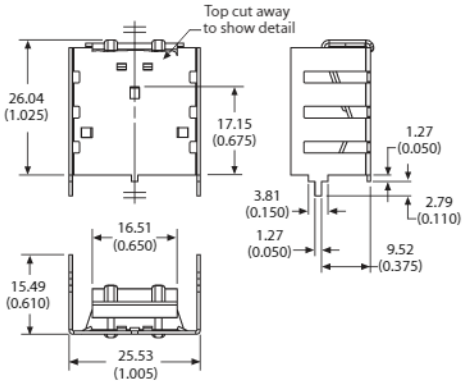

Material: 0.63 (0.025) Thick Copper
Finish: Tin Plated

ORDERING INFORMATION

Part Number	Description	Dia of PCB Plated Thru Hole for Tabs
7130DG	Slide on, channel style heat sink with integrated tabs	2.54 (0.100)

AAVID THERMALLOY
www.aavidthermalloy.com

AMERICA
USA Tel: +1 (603) 224-9988 email: info@aavid.com

EUROPE
Italy Tel: +39 051 764011 email: sales.it@aavid.com
United Kingdom Tel: +44 1793 401400 email: sales.uk@aavid.com

ASIA
Singapore Tel: +65 6362 8388 email: sales@aavid.com.sg
Taiwan Tel: +886(2) 2698-9888 email: sales@aavid.com.tw

5063 Low profile hat section heat sink

Grease & Epoxy page112

Mounting Kits page 99

Low profile hat section heat sink has a total height of 0.375 making it perfect for mounting to printed circuit boards with 0.500 centering between boards.

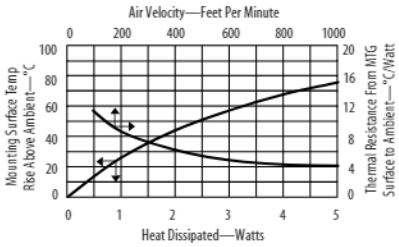

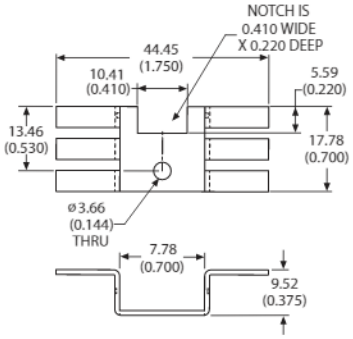

Material: 1.02 (0.040) Thick Aluminum
Finish: Black Anodize

ORDERING INFORMATION

Part Number	Description
506304B00000G	Hat section heat sink

For additional options see page 84

5740 Low cost slide on heat sink

Low cost slide on heat sink provides positive retention with an integral locking tab. The spring tension ensures excellent thermal contact for maximum performance. Requires no hardware to mount.

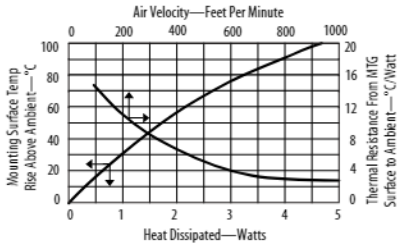

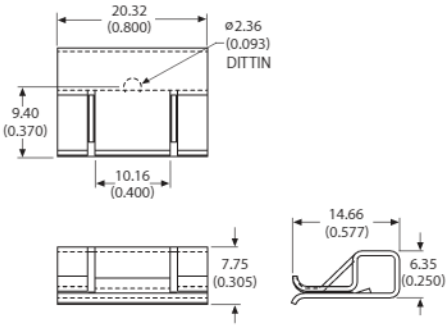

Material: 0.63 (0.025) Thick Aluminum
Finish: See Table

ORDERING INFORMATION

Part Number	Finish
574004B00000G	Black anodize
574004U00000G	Unfinished

5742, 5796, 5797 Low cost slide on cooler heat sink

Low cost slide on cooler heat sink is easy to assemble to the device and requires no mounting hardware. Models have fins on both sides, or the left or right. Available with or without staked on solderable tab for easy board mounting.

FIGURE A

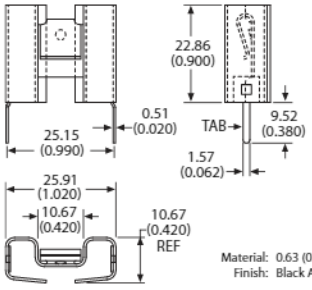

Material: 0.63 (0.025) Thick Aluminum
Finish: Black Anodize

FIGURE B

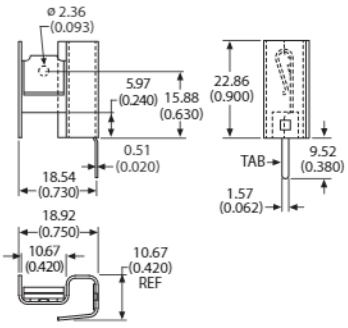

Note: Fins on Left or Right. Right hand fin model shown.

ORDERING INFORMATION

Part Number	Description	Figure	Dia of PCB Plated Thru Hole for Tabs
574204B00000G	Low cost slide on cooler, no solderable tabs	A	
574204B03300G	With solderable tabs	A	1.910 (0.075)
579604B00000G	With left side fin only, no solderable tabs	B	
579604B03300G	With left side fin only and solderable tabs	B	1.910 (0.075)
579704B00000G	With right side fin only, no solderable tabs	B	
579704B03300G	With right side fin only and solderable tabs	B	1.910 (0.075)

For additional options see page 84

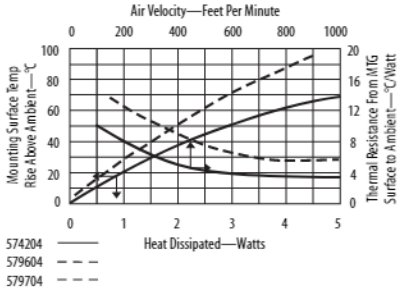

TO-202 Heat Sinks

5769, 5773, 5774 Slim low profile channel style heat sink

Grease & Epoxy page112
Mounting Kits page 99

Slim low profile channel style heat sink is notched to accommodate the TO-202 center tab packages. Available in 3 heights.

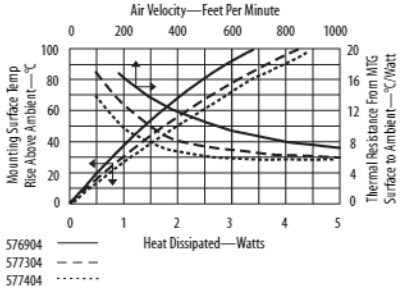

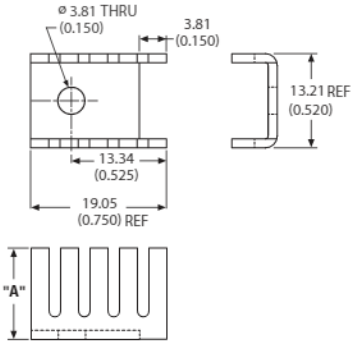

Material: 1.27 (0.050) Thick Aluminum
Finish: Black Anodize

ORDERING INFORMATION

Part Number	"A" Dim
576904B00000G	6.35 (0.250)
577304B00000G	9.53 (0.375)
577404B00000G	12.70 (0.500)

For additional options see page 84

6034 Space saving staggered fin heat sink

Grease & Epoxy page112
Mounting Kits page 99

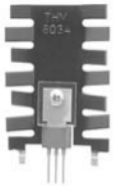

Space saving heat sink features staggered fins for increased cooling efficiency. This verticle mount heat sink features integrated matte tin plated tabs to solder directly to the PC board.

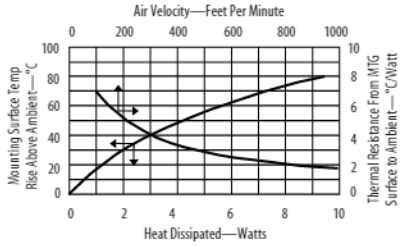

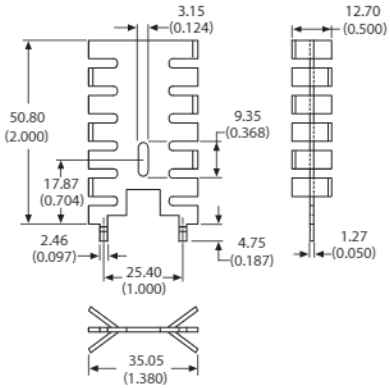

Material: 1.27 (0.050) Thick Copper
Finish: Tin Plated

ORDERING INFORMATION

Part Number	Description	Dia of PCB Plated Thru Hole for Tabs
6034DG	Space saving staggered fin heat sink with integrated tin plated tabs	3.10 (0.122)

6046, 6047 Compact slide on heat sink

Compact slide on heat sink makes assembly easy. The 6046 features a positive device catch to lock the heat sink to the device.

FIGURE A

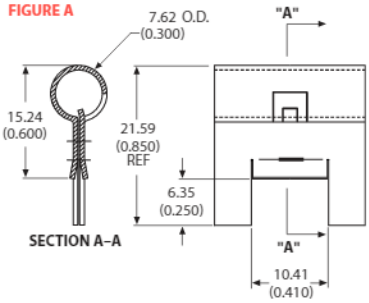

FIGURE B

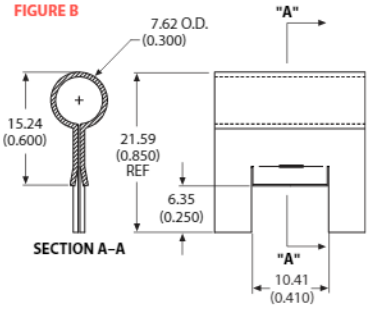

Material: 0.63 (0.025) Thick Aluminum
Finish: Pre-Black Anodize*

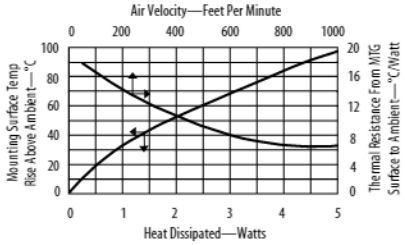

ORDERING INFORMATION

Part Number	Description	Figure
6046PBG	With device catch	A
6047PBG	Compact slide on heat sink	B

*Edges cut during the manufacturing process will be unfinished.
See page 110 for more information.

AAVID THERMALLOY
www.aavidthermalloy.com

AMERICA
USA Tel: +1 (603) 224-9988 email: info@aavid.com

EUROPE
Italy Tel: +39 051 764011 email: sales.it@aavid.com
United Kingdom Tel: +44 1793 401400 email: sales.uk@aavid.com

ASIA
Singapore Tel: +65 6362 8388 email: sales@aavid.com.sg
Taiwan Tel: +886(2) 2698-9888 email: sales@aavid.com.tw

5775 Slip on heat sink

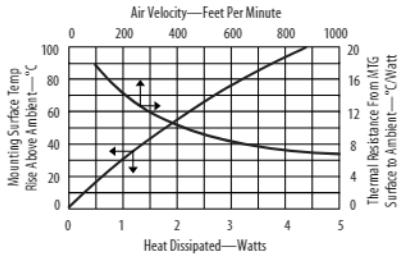

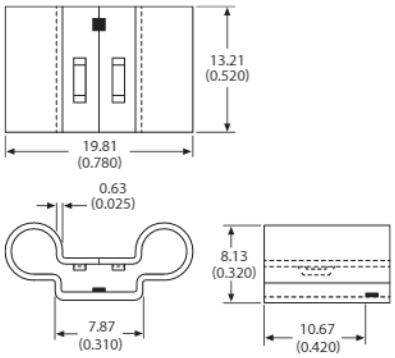

Material: 0.63 (0.025) Thick Aluminum
Finish: See Table

Slip on heat sink requires no hardware to attach to the device. Spring pressure ensures excellent retention. May be assembled before or after the device is attached to the board.

ORDERING INFORMATION

Part Number	Finish
577500B00000G	Black anodize
577500U00000G	Unfinished

TV4 Narrow channel style heat sink featuring twisted fins

Grease & Epoxy page112

Mounting Kits page 99

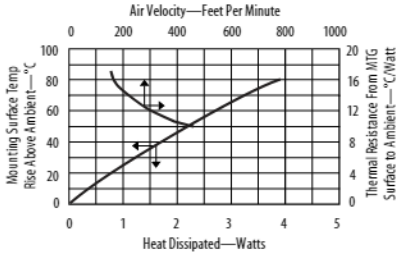

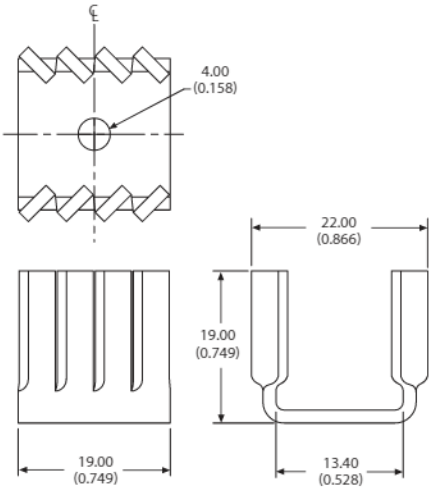

Material: 1.63 (0.064) Thick Aluminum
Finish: Black Anodize

Narrow channel style heat sink features twisted fins for increased air turbulance for better cooling. Can be mounted horizontally or vertically.

ORDERING INFORMATION

Part Number	Description
TV4G	Narrow channel style heat sink with twisted fins

PF730, PF732 Slip on heat sink

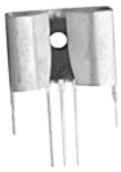

FIGURE A

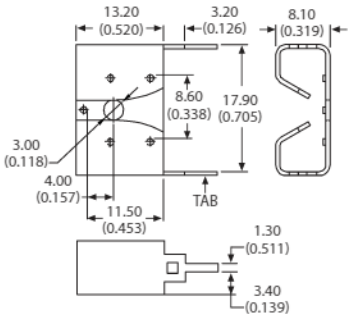

FIGURE B

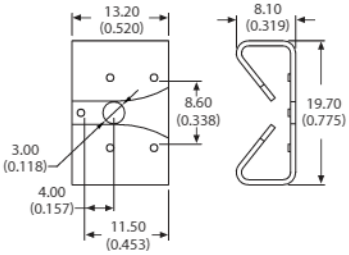

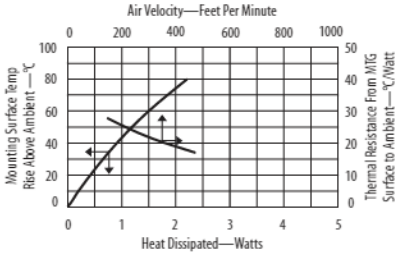

Slip on heat sink has locating features for simple device alignment. Spring action holds the device for good thermal contact. The tabbed version is made from tin plated copper and the no tab version is lightweight aluminum.

ORDERING INFORMATION

Part Number	Description	Material	Finish	Figure
PF730G	Slip on heat sink	Aluminum	Black anodize	B
PF732G	With solderable tabs	Copper	Tin plated	A

5660 Plug in style heat sink

Plug in style heat sink features four spring action clips to firmly hold the device to the heat sink ensuring maximum metal to metal contact. Available with or without solderable tabs for horizontal or vertical mounting to the PC board.

FIGURE A

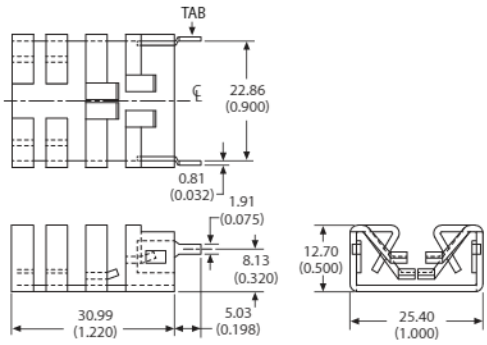

FIGURE B

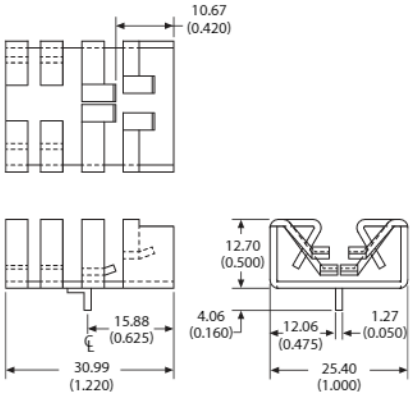

Material: 1.27 (0.050) Thick Aluminum
Finish: Black Anodize

ORDERING INFORMATION

Part Number	Description	Figure	Dia of PCB Plated Thru Hole for Tabs
566010B00000G	Plug in style heat sink, no solderable tabs	B	
566010B03100G	With solderable tab for horizontal mounting	B	1.73 (0.068)
566010B03400G	With solderable tabs for vertical mounting	A	2.39 (0.094)

POPULAR OPTIONS:

566010B0 00 00G
Base part no. A

Position	Code	Description	Details
A	28	Solderable Shur-Lock™ Tab for vertical mounting	Page 91

For additional options see page 84

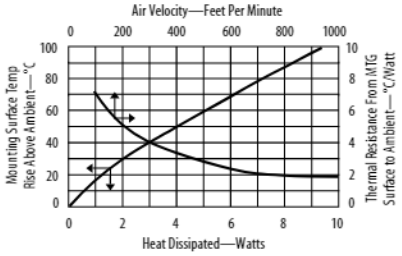

5305 Channel style heat sink with integrated clip

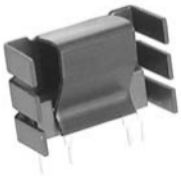

Channel style heat sink with integrated clip features strong spring tension and device locking catch to attach device securely to the heat sink. Available in two finishes.

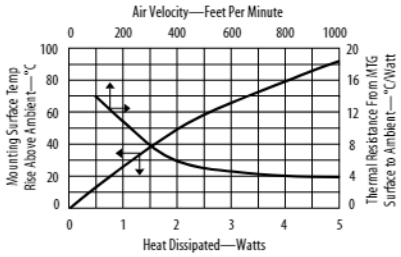

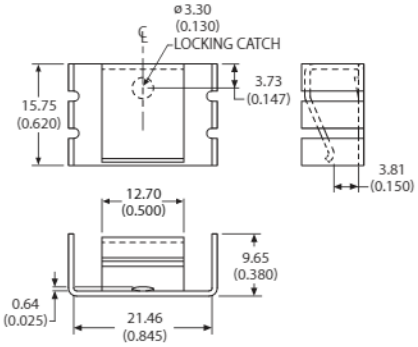

Material: 0.81 (0.032) Thick Aluminum
Finish: See Table

ORDERING INFORMATION

Part Number	Finish
530510U00000G	Unfinished
530510B00000G	Black anodize

AAVID THERMALLOY
www.aavidthermalloy.com

AMERICA
USA Tel: +1 (603) 224-9988 email: info@aavid.com

EUROPE
Italy Tel: +39 051 764011 email: sales.it@aavid.com
United Kingdom Tel: +44 1793 401400 email: sales.uk@aavid.com

ASIA
Singapore Tel: +65 6362 8388 email: sales@aavid.com.sg
Taiwan Tel: +886(2) 2698-9888 email: sales@aavid.com.tw

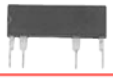

7038 Channel style slide on heat sink featuring an integrated clip and device retaining tab

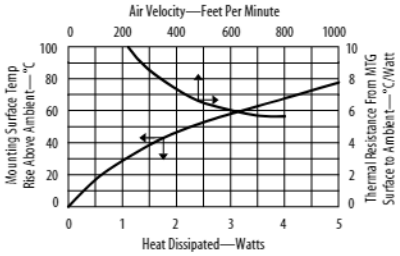

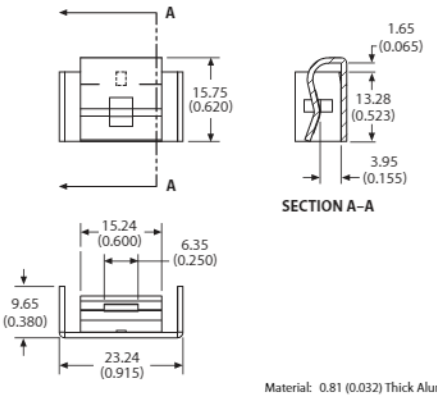

Channel style slide on heat sink features an integrated clip and device retaining tab to hold the heat sink to the device. Small footprint consumes less board space.

Material: 0.81 (0.032) Thick Aluminum
Finish: Black Anodize

ORDERING INFORMATION

Part Number	Description
7038BG	Channel style slide on heat sink

7148 Copper channel style slide on heat sink featuring an integrated clip and solderable tabs

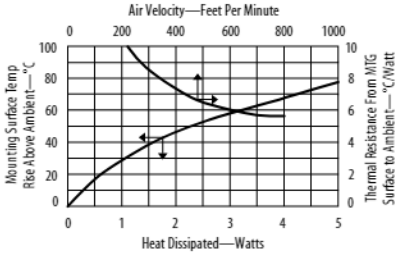

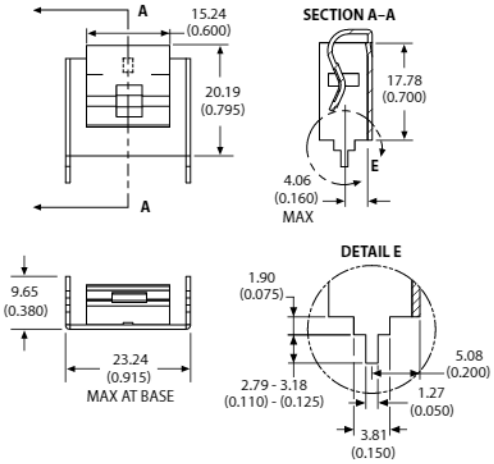

Copper channel style slide on heat sink features an integrated clip and solderable tabs. Includes a device retaining tab to securely hold the heat sink to the device. Small footprint consumes less board space.

Material: 0.81 (0.032) Thick Copper
Finish: Tin Plated

ORDERING INFORMATION

Part Number	Description	Dia of PCB Plated Thru Hole for Tabs
7148DG	Slide on heat sink with integrated clip	2.54 (0.100)

5840 Clip on heat sink featuring louvers

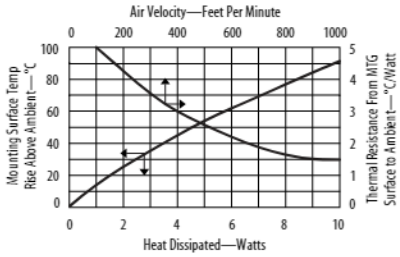

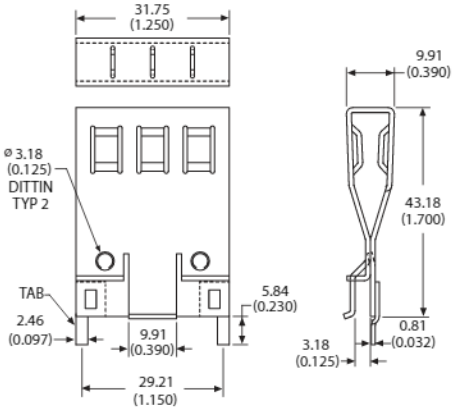

Clip on heat sink features louvers to provide excellent cooling in natural or forced air convection. Spring action provides strong clamping force to securely hold the heat sink to the device. Available with or without solderable tabs.

Material: 1.02 (0.040) Thick Aluminum
Finish: Black Anodize

ORDERING INFORMATION

Part Number	Description	Dia of PCB Plated Thru Hole for Tabs
584000B00000G	Clip on heat sink. no solderable tabs	
584000B03500G	With solderable tabs for vertical mounting	2.84 (0.112)

For additional options see page 84

TO-92 Heat Sinks

5752, 5753, 5754 Low cost slip on heat sink

Low cost slip on heat sink features an expandable collar that tightly grips the device meaning no extra mounting hardware is required. Three heights to choose from.

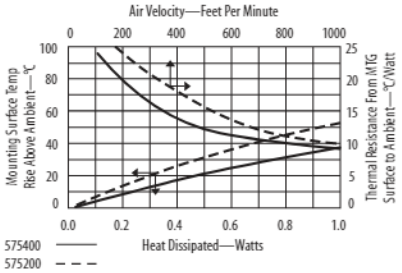

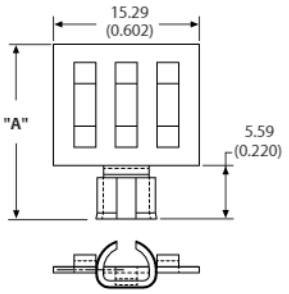

Material: 0.63 (0.025) Thick Aluminum
Finish: Black Anodize

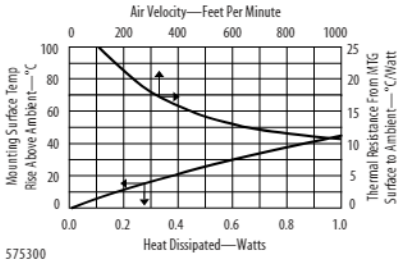

ORDERING INFORMATION

Part Number	"A" Dim
575200B00000G	18.29 (0.720)
575300B00000G	24.64 (0.970)
575400B00000G	30.99 (1.220)

92F Low cost brass clip on heat sink

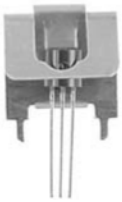

Low cost brass clip on heat sink requires no hardware to attach to the device. Includes integrated tabs that can be soldered or twisted to attach the heat sink to the board reducing stress on the device leads.

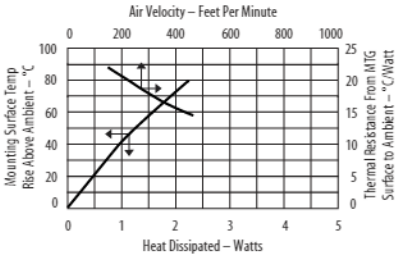

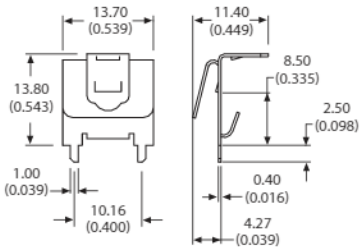

Material: 0.38 (0.015) Thick Brass
Finish: Unfinished

ORDERING INFORMATION

Part Number	Description	Dia of PCB Plated Thru Hole for Tabs
92FG	Brass clip on heat sink	1.73 (0.068)

AAVID THERMALLOY
www.aavidthermalloy.com

AMERICA
USA Tel: +1 (603) 224-9988 email: info@aavid.com

EUROPE
Italy Tel: +39 051 764011 email: sales.it@aavid.com
United Kingdom Tel: +44 1793 401400 email: sales.uk@aavid.com

ASIA
Singapore Tel: +65 6362 8388 email: sales@aavid.com.sg
Taiwan Tel: +886(2) 2698-9888 email: sales@aavid.com.tw

5203 Two piece heat sink

Grease & Epoxy page112

Mounting Kits page 99

Two piece heat sink adds extra cooling in the same amount of board space as other solutions. Base and top can be ordered separately.

FIGURE A

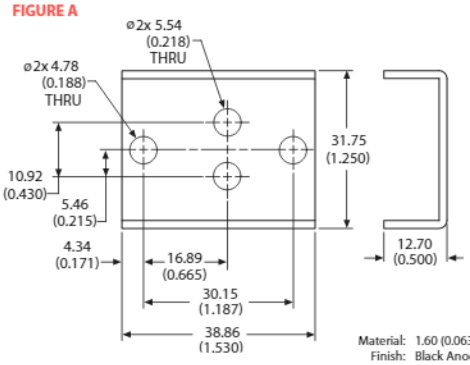

Material: 1.60 (0.063) Thick Aluminum
Finish: Black Anodize

FIGURE B

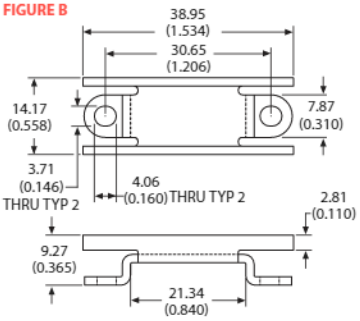

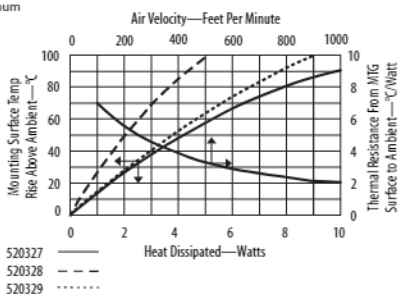

ORDERING INFORMATION

Part Number	Description	Figure
520327B00000G	Two piece heat sink assembly, base and top	
520328B00000G	Top only	B
520329B00000G	Base only	A

For additional options see page 84

5791 Space saving expandable collar heat sink

Mounting Kits page 99

Space saving expandable collar heat sink has the same footprint as the device being cooled meaning no extra board space is required to fit the heat sink. The expandable collar tightly grips the device meaning no extra hardware is required. May also be used with any diamond or square basket heat sink to form a two piece heat sink for additional cooling. Available in conductive AavSHIELD[3] or black anodize finish.

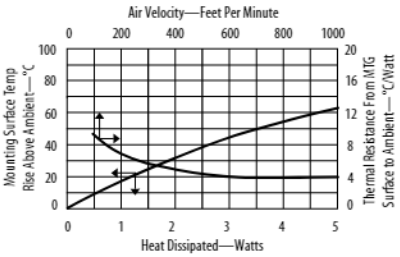

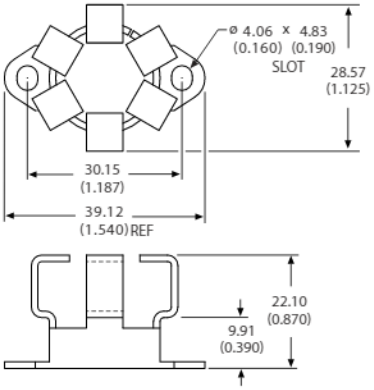

Material: 1.27 (0.050) Thick Aluminum
Finish: See Table

ORDERING INFORMATION

Part Number	Finish
579103B00000G	Black anodize
579103V00000G	AavSHIELD[3]

5060 Low profile hat section heat sink

Grease & Epoxy page112

Mounting Kits page 99

Low profile hat section heat sink is ideal for applications where low component heights are required such as card cages with PCBs mounted on 0.500 centers.

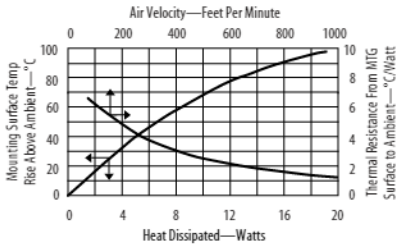

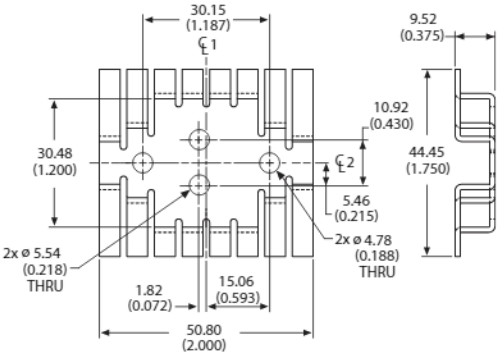

Material: 1.27 (0.050) Thick Aluminum
Finish: Black Anodize

ORDERING INFORMATION

Part Number	Description
506003B00000G	Low profile hat section heat sink

For additional options see page 84

TO-3 Heat Sinks

5756, 5757, 5758, 5759 Space saver diamond shaped basket heat sink

Grease & Epoxy page112
Mounting Kits page 99

Space saver diamond shaped basket heat sink featuring a narrow base with slanted fins to increase air turbulence in natural and forced convection applications. Made from heavy gauge material. Four heights to choose from.

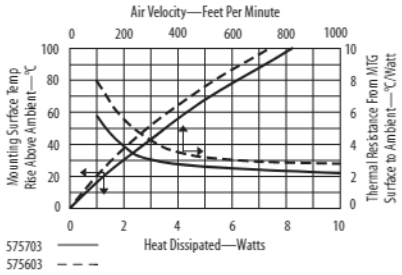

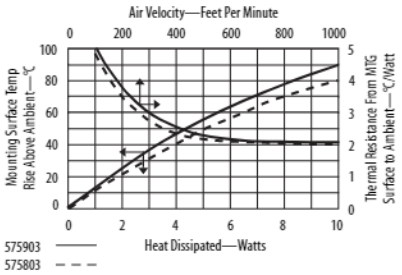

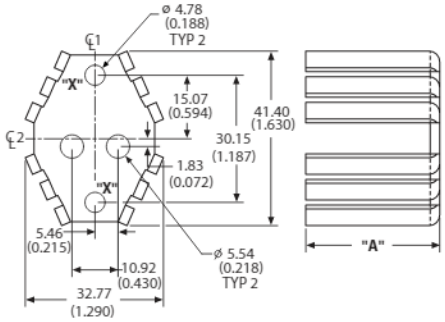

Material: 2.29 (0.090) Thick Aluminum
Finish: Black Anodize

ORDERING INFORMATION

Part Number	"A" Dim
575603B00000G	12.70 (0.500)
575703B00000G	19.05 (0.750)
575803B00000G	25.40 (1.000)
575903B00000G	31.75 (1.250)

POPULAR OPTIONS: 575_03B 0 00 00G

Base part no. A B

Position	Code	Description	Location	Details
A	1	Kon-Dux™ pad		Page 86
A	3	In-Sil-8™ pad		Page 86
B	01	6-23 Wave-On™ threaded insert 0.100 stand off	Hole X	Page 89

For additional options see page 84

5013, 5014, 5015, 5016 Low cost diamond shaped basket heat sink

Grease & Epoxy page112
Mounting Kits page 99

Low cost diamond shaped basket heat sink with straight fins. High fin count enhances efficiency. Four heights to choose from.

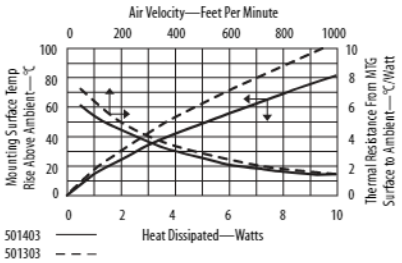

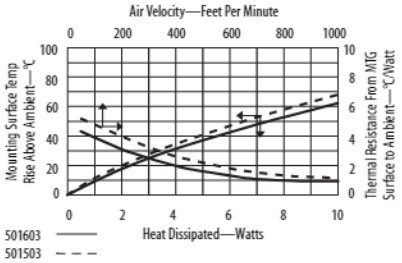

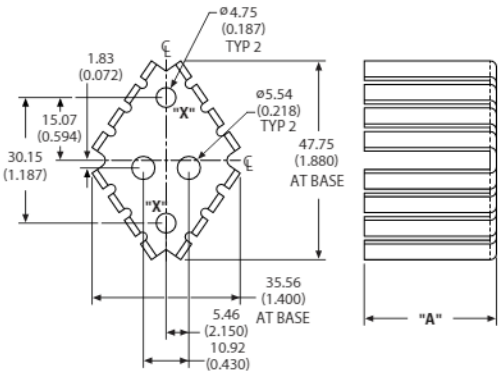

Material: 1.60 (0.063) Thick Aluminum
Finish: Black Anodize

ORDERING INFORMATION

Part Number	"A" Dim
501303B00000G	12.70 (0.500)
501403B00000G	19.05 (0.750)
501503B00000G	25.40 (1.000)
501603B00000G	31.75 (1.250)

POPULAR OPTIONS: 501_03B 0 00 00G

Base part no. A B C

Position	Code	Description	Location	Details
A	1	Kon-Dux™ pad		Page 86
B	01	6-23 Wave-On™ threaded insert 0.100 stand off	Hole X	Page 89
C	08	6-32 x 0.350 Solderable stud	Hole X	Page 96

For additional options see page 84

AAVID THERMALLOY
www.aavidthermalloy.com
AMERICA USA Tel: +1 (603) 224-9988 email: info@aavid.com
EUROPE Italy Tel: +39 051 764011 email: sales.it@aavid.com
United Kingdom Tel: +44 1793 401400 email: sales.uk@aavid.com
ASIA Singapore Tel: +65 6362 8388 email: sales@aavid.com.sg
Taiwan Tel: +886(2) 2698-9888 email: sales@aavid.com.tw

5197, 5198, 5199, 5201 Heavy gauge square basket heat sink

Grease & Epoxy page112 | Mounting Kits page 99

Heavy gauge square basket heat sink provides excellent performance by using 1/8 thick aluminum to maximize efficiency. Available in 4 heights.

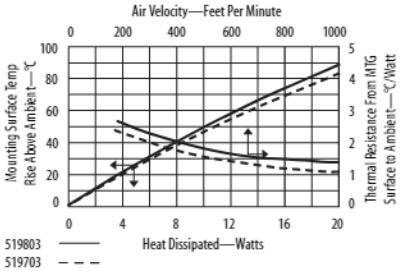

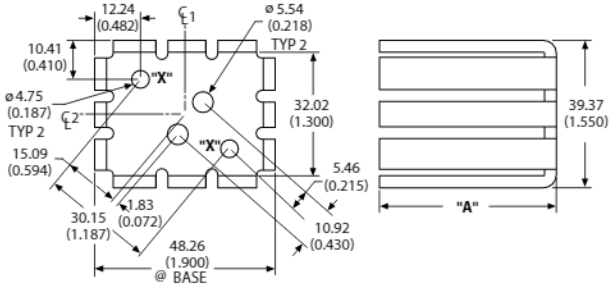

Material: 3.17 (0.125) Thick Aluminum
Finish: Black Anodize

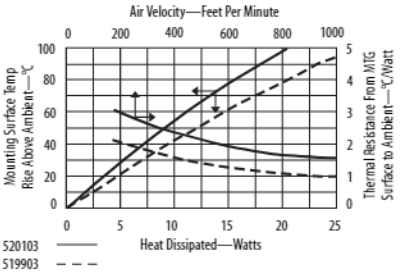

ORDERING INFORMATION

Part Number	"A" Dim
519703B00000G	38.10 (1.500)
519803B00000G	44.45 (1.750)
519903B00000G	50.80 (2.000)
520103B00000G	31.12 (1.225)

POPULAR OPTIONS: 5_ _ _03B 0 00 00G

Base part no. A B

Position	Code	Description	Location	Details
A	1	Kon-Dux™ pad		Page 86
B	01	6-32 Wave-On™ theaded insert 0.100 stand off	Hole X	Page 89

For additional options see page 84

5690, 5790 Square basket heat sink features folded back fins

Grease & Epoxy page112 | Mounting Kits page 99

Square basket heat sink features folded back fins to increase surface area and power dissipation. Two heights are available.

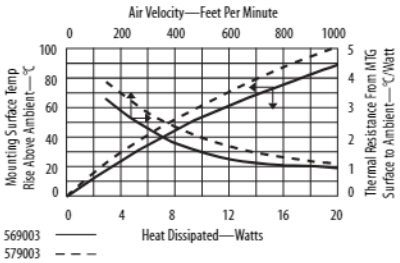

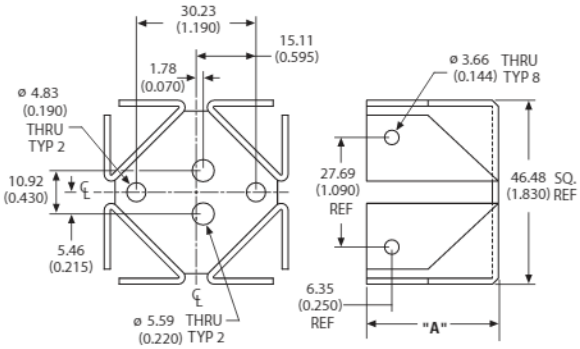

Material: 1.60 (0.063) Thick Aluminum
Finish: Black Anodize

ORDERING INFORMATION

Part Number	"A" Dim
569003B00000G	33.27 (1.310)
579003B00000G	25.40 (1.000)

POPULAR OPTIONS: 5_9003B 0 0000G

Base part no. A

Position	Code	Description	Details
A	1	Kon-Dux™ pad	Page 86
A	3	In-Sil-8™ pad	Page 86

For additional options see page 84

TO-3 Heat Sinks

5001, 5002, 5003, 5004 Square basket heat sink featuring slanted fins

Grease & Epoxy page112
Mounting Kits page 99

Square basket heat sink featuring a slanted fin design for increased air turbulence and four integrated mounting holes. Four heights to choose from.

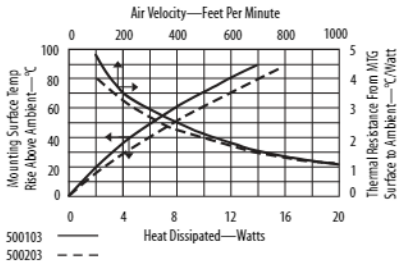

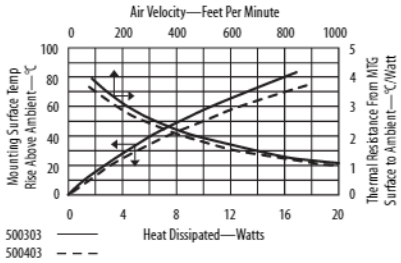

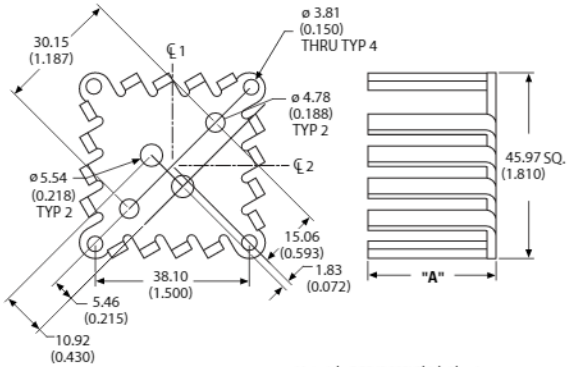

Material: 2.29 (0.090) Thick Aluminum
Finish: Black Anodize

ORDERING INFORMATION

Part Number	"A" Dim
500103B00000G	12.70 (0.500)
500203B00000G	19.05 (0.750)
500303B00000G	25.40 (1.000)
500403B00000G	31.75 (1.250)

POPULAR OPTIONS: 500_03B 0 0000G

Base part no. A

Position	Code	Description	Details
A	1	Kon-Dux™ pad	Page 86
A	3	In-Sil-8™ pad	Page 86

For additional options see page 84

5051, 5053, 5054 Square basket heat sink featuring straight fins

Grease & Epoxy page112
Mounting Kits page 99

Square basket heat sink features straight fins and 0.090 thick aluminum for increased cooling capacity. Three heights to choose from.

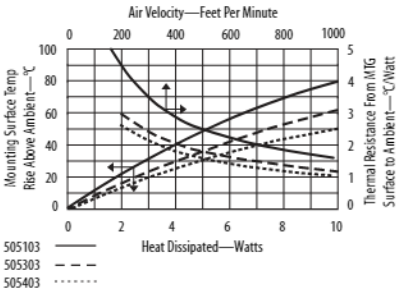

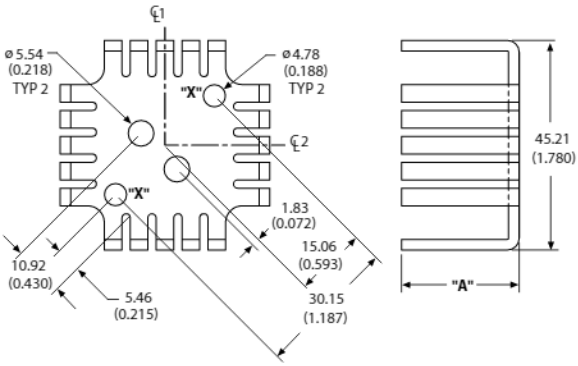

Material: 2.29 (0.090) Thick Aluminum
Finish: Black Anodize

ORDERING INFORMATION

Part Number	"A" Dim
505103B00000G	12.70 (0.500)
505303B00000G	25.40 (1.000)
505403B00000G	31.75 (1.250)

POPULAR OPTIONS: 505_03B0 00 00G

Base part no. A

Position	Code	Description	Location	Details
A	01	6-23 Wave-On™ threaded insert 0.100 stand off	Hole X	Page 89

For additional options see page 84

AAVID THERMALLOY
www.aavidthermalloy.com
AMERICA USA Tel: +1 (603) 224-9988 email: info@aavid.com
EUROPE Italy Tel: +39 051 764011 email: sales.it@aavid.com
United Kingdom Tel: +44 1793 401400 email: sales.uk@aavid.com
ASIA Singapore Tel: +65 6362 8388 email: sales@aavid.com.sg
Taiwan Tel: +886(2) 2698-9888 email: sales@aavid.com.tw

5761, 5762, 5763, 5764 Square basket heat sink featuring slanted vane fins

Grease & Epoxy page112
Mounting Kits page 99

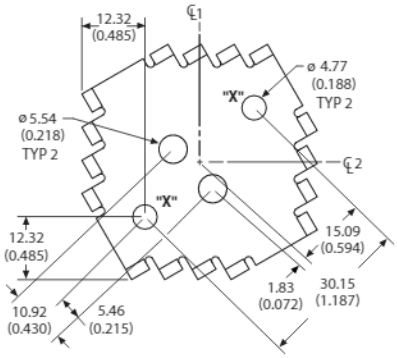

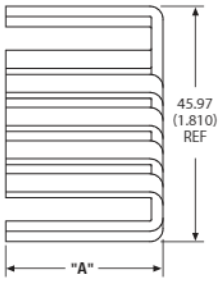

Material: 2.29 (0.090) Thick Aluminum
Finish: Black Anodize

Square basket heat sink features slanted vane fins for efficient heat dissipation. Air movement from any direction is diverted into the center of the heat sink to create turbulence and improve heat transfer. Four heights to choose from.

ORDERING INFORMATION

Part Number	"A" Dim
576103B00000G	12.70 (0.500)
576203B00000G	19.05 (0.750)
576303B00000G	25.40 (1.000)
576403B00000G	31.75 (1.250)

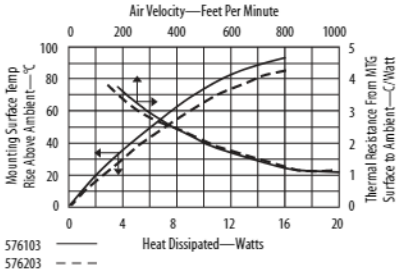

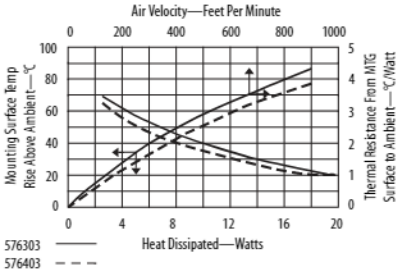

POPULAR OPTIONS: 576 _ 03B 0 00 00G

Base part no. A B

Position	Code	Description	Location	Details
A	1	Kon-Dux™ pad		Page 86
B	01	6-32 Wave-On™ theaded insert 0.100 stand off	Hole X	Page 89

For additional options see page 84

PF523, PF526, PF527 Diamond shaped heat sink

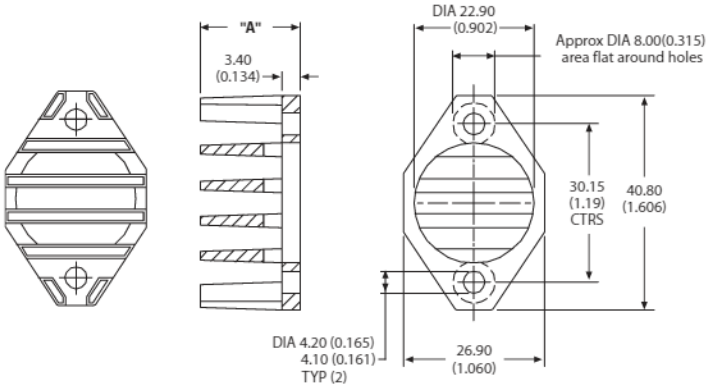

Material: Cast Aluminum
Finish: Black Anodize

Diamond shaped heat sink is the same profile as the device which saves space on the board. This rugged design is made from cast aluminum and is available in three different heights.

ORDERING INFORMATION

Part Number	"A" Dim
PF523G	12.50 (0.492)
PF526G	19.00 (0.748)
PF527G	25.00 (0.984)

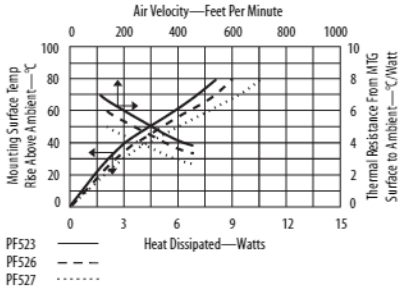

TO-66 Heat Sinks

5017, 5018, 5019, 5020 Low cost diamond shaped basket heat sink

Grease & Epoxy page112
Mounting Kits page 99

Low cost diamond shaped basket heat sink with straight fins. High fin count enhances efficiency. Four heights to choose from.

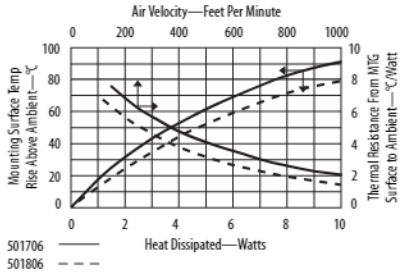

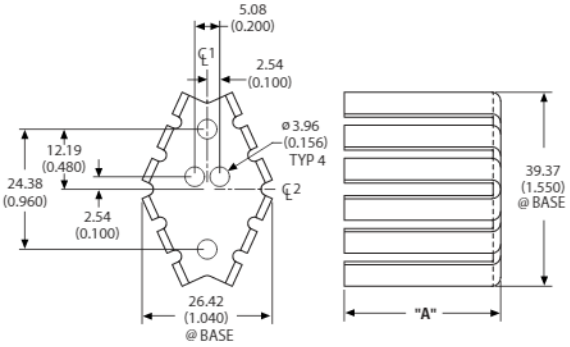

Material: 1.60 (0.063) Thick Aluminum
Finish: Black Anodize

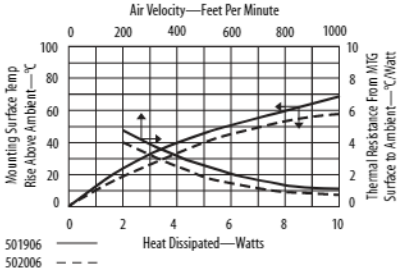

ORDERING INFORMATION

Part Number	"A" Dim
501706B00000G	12.70 (0.500)
501806B00000G	19.05 (0.750)
501906B00000G	25.40 (1.000)
502006B00000G	31.75 (1.250)

5792 Space saving expandable collar heat sink

Mounting Kits page 99

Space saving expandable collar heat sink has the same footprint as the device being cooled meaning no extra board space is required to fit the heat sink. The expandable collar tightly grips the device.

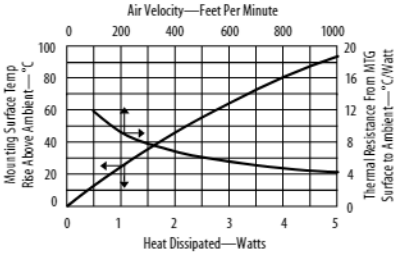

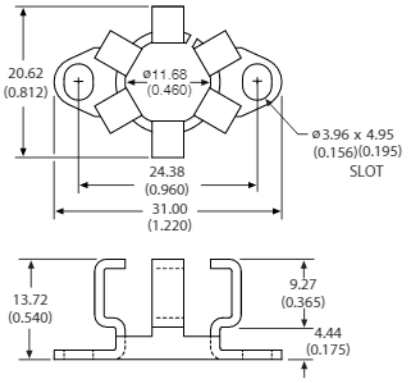

Material: 1.27 (0.050) Thick Aluminum
Finish: See Table

ORDERING INFORMATION

Part Number	Finish
579206B00000G	Black anodize
579206V00000G	AavSHIELD^3

AAVID THERMALLOY
www.aavidthermalloy.com
AMERICA USA Tel: +1 (603) 224-9988 email: info@aavid.com
EUROPE Italy Tel: +39 051 764011 email: sales.it@aavid.com
United Kingdom Tel: +44 1793 401400 email: sales.uk@aavid.com
ASIA Singapore Tel: +65 6362 8388 email: sales@aavid.com.sg
Taiwan Tel: +886(2) 2698-9888 email: sales@aavid.com.tw

5781, 5782, 5783, 5784, 5785 Snap on cooler heat sink

Snap on cooler features easy no tools installation. Folded back fins provide maximum surface area while preserving valuable board space.

ORDERING INFORMATION

Part Number	"A" Dim
578105B00000G	3.96 (0.156)
578205B00000G	6.35 (0.250)
578305B00000G	12.70 (0.500)
578405B00000G	19.05 (0.750)
578505B00000G	25.40 (1.000)

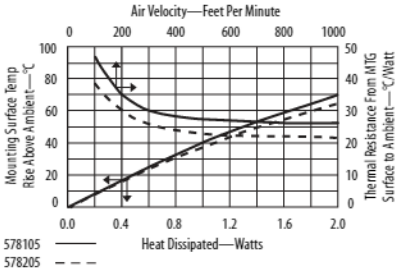

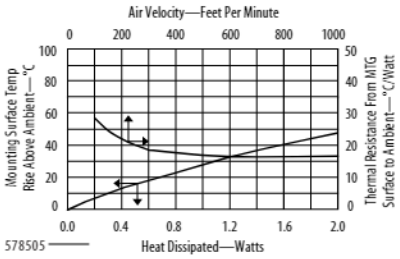

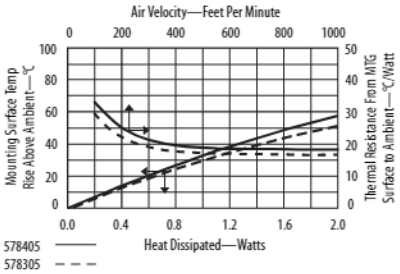

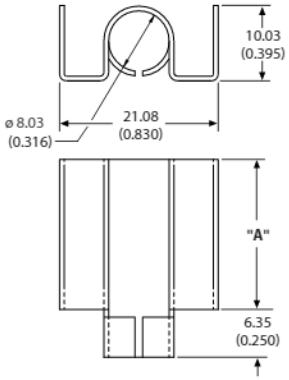

Material: 0.63 (0.025) Thick Aluminum
Finish: Black Anodize

6201, 6202, 6203 Space saving expandable heat sink

Space saving expandable heat sink features a collar that tightly grips the device meaning no extra hardware is required. Heat sinks are constructed of pre-black anodize material to lower cost.

ORDERING INFORMATION

Part Number	"A" Dim	# Fins
6201PBG	6.35 (0.250)	1
6202PBG	12.70 (0.500)	2
6203PBG	19.56 (0.770)	3

* Edges cut during the manufacturing process will be unfinished.
See page 110 more more information

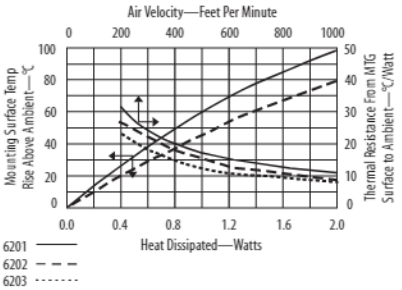

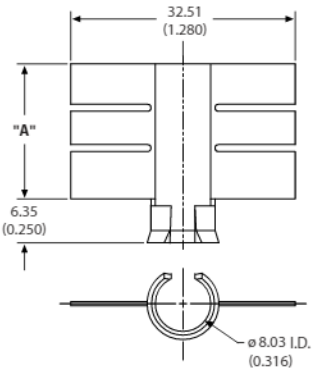

Material: 0.63 (0.025) Thick Aluminum
Finish: Pre Black Anodize*

5F Low cost push on heat sink

Low cost push on heat sink uses spring pressure to firmly grip the device case creating a good thermal interface.

ORDERING INFORMATION

Part Number	Description
5FG	Low cost push on heat sink

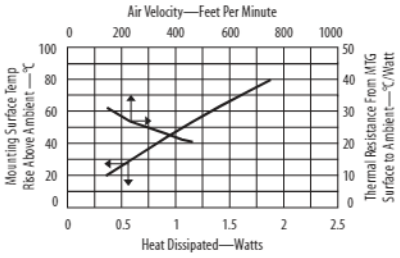

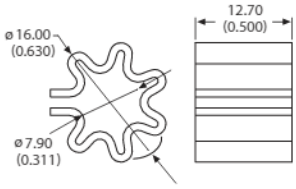

Material: Aluminum
Finish: Black Anodize

TO-5 Heat Sinks

3257, 3260 Extruded collar style heat sink with radial fins

Extruded collar style heat sink with radial fins. The split collar design provides a press fit between the transistor and the heat sink creating an excellent thermal conduction path. Available in two heights.

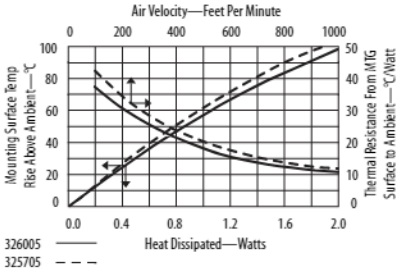

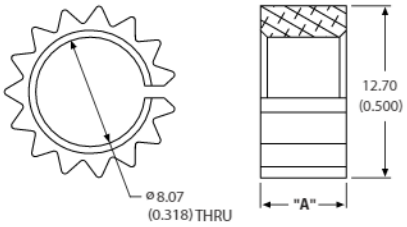

Material: Aluminum
Finish: Black Anodize

ORDERING INFORMATION

Part Number	"A" Dim
325705B00000G	6.35 (0.250)
326005B00000G	9.53 (0.375)

3201, 3202 Extruded collar style heat sink with swept back fins

Extruded collar style heat sink with swept back fins for increased surface area in a small volume. The split collar design provides a press fit between the transistor and the heat sink creating an excellent thermal conduction path. Available in two inside diameters.

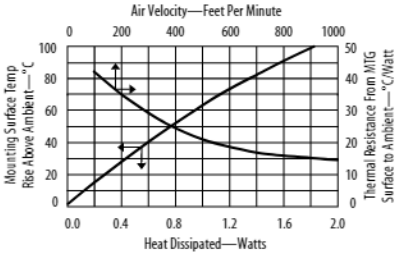

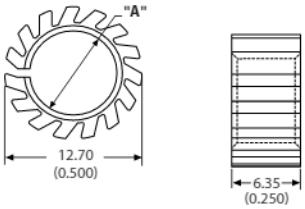

Material: Aluminum
Finish: Black Anodize

ORDERING INFORMATION

Part Number	"A" Dim
320105B00000G	8.07 (0.318)
320205B00000G	7.75 (0.305)

3230 Extruded collar style heat sink with mounting hole

Extruded collar style heat sink with mounting hole for hardware attachment to the circuit card. The heat sink includes a mount boss that will accept a 4-40 screw for secure mounting in high vibration environments. The split collar design provides a press fit between the transistor and the heat sink creating an excellent thermal conduction path.

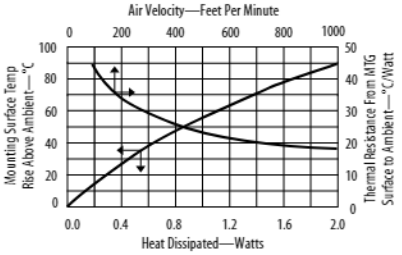

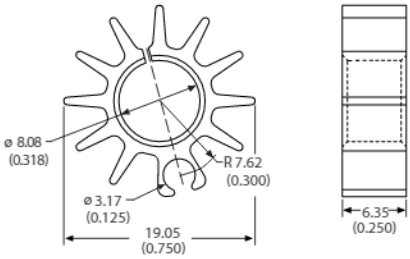

Material: Aluminum
Finish: Black Anodize

ORDERING INFORMATION

Part Number	Description
323005B00000G	Extruded collar style heat sink with mounting boss

AAVID THERMALLOY
www.aavidthermalloy.com

AMERICA
USA Tel: +1 (603) 224-9988 email: info@aavid.com

EUROPE
Italy Tel: +39 051 764011 email: sales.it@aavid.com
United Kingdom Tel: +44 1793 401400 email: sales.uk@aavid.com

ASIA
Singapore Tel: +65 6362 8388 email: sales@aavid.com.sg
Taiwan Tel: +886(2) 2698-9888 email: sales@aavid.com.tw

6000 Copper heat sink for axial lead devices

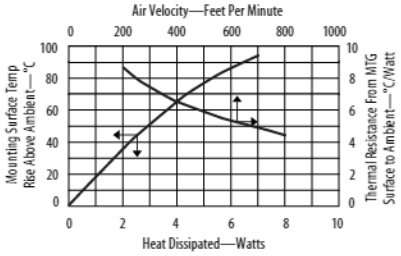

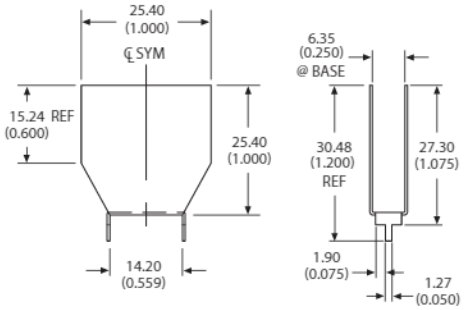

FIGURE A

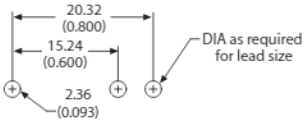

Material: 0.53 (0.021) Thick Copper
Finish: See Table

Copper heat sink for axial lead device requires no extra board space to mount. One lead of the heat sink is soldered to the device while the other solders to the PC board. Available in two finishes.

ORDERING INFORMATION

Part Number	Description	Finish	Dia of PCB Plated Thru Hole for Tabs
6000UG	Heat sink for axial lead device	Unfinished	See figure A
6000DG	Heat sink for axial lead device	Tin plated*	See figure A

* See page 110 for more information

Bridge Rectifiers

6222, 6223, 6224 Square basket style heat sink for bridge rectifiers

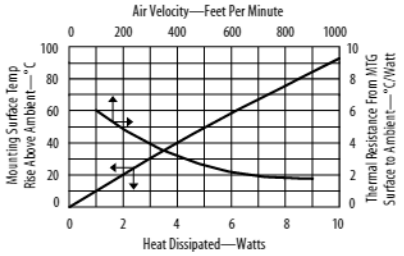

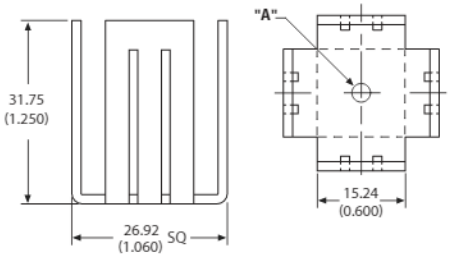

Material: 1.27 (0.050) Thick Aluminum
Finish: Black Anodize

Square basket style heat sink for bridge rectifiers uses no additional board space. Available with three different mounting hole diameters.

ORDERING INFORMATION

Part Number	"A" Dim
6222BG	3.61 (0.142) Dia Thru
6223BG	4.14 (0.163) Dia Thru
6224BG	4.77 (0.188) Dia Thru

Thermal solutions go beyond the heat dissipator itself. Aavid Thermalloy offers a total solution package, which includes a number of options and accessory items described in this section of the catalog.

A total thermal solution includes an efficient thermal interface and means of mechanical attachment. Aavid Thermalloy has a full-line of interface materials that can be pre-applied or supplied as an accessory item. Mechanical assembly options include attachment of semiconductors to heat sinks, heat sinks to printed circuit boards, and heat sinks to sockets of CPUs.

Aavid Thermalloy offers the most complete line of value added options of any supplier in the industry. Our full line of accessories includes mounting kits, shoulder washers, insulators, mounting pads, and various grease products and epoxies, which are sold separately, and can be used with a variety of Aavid heat sinks.

This section will provide the most complete solution to your thermal requirement.

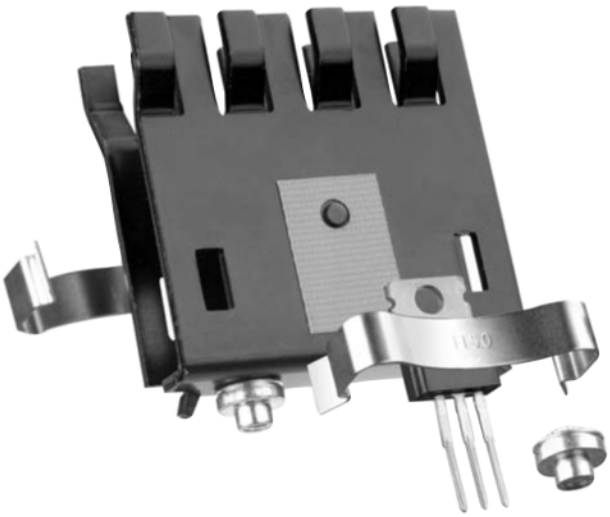

CONTENTS

AAVID THERMALLOY
www.aavidthermalloy.com

AMERICA
USA Tel: +1 (603) 224-9988 email: info@aavid.com

EUROPE
Italy Tel: +39 051 764011 email: sales.it@aavid.com
United Kingdom Tel: +44 1793 401400 email: sales.uk@aavid.com

ASIA
Singapore Tel: +65 6362 8388 email: sales@aavid.com.sg
Taiwan Tel: +886 (2) 2698-9888 email: sales@aavid.com.tw

CONTENTS

Accessories

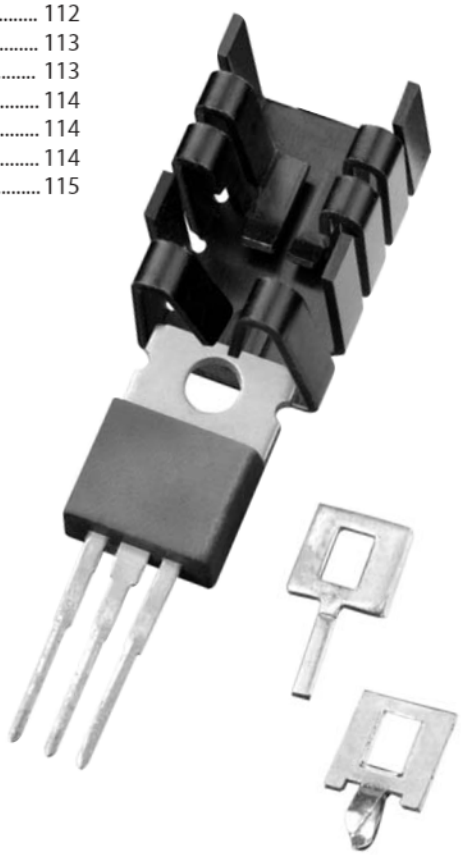

How to decipher an Aavid standard 12 digit part number

Aavid Thermalloy's standard product line in most cases consists of a 12-digit part number sequence. In most standard offerings, Digits 1 through 4, define the model basic part number. Digits 5 and 6 designate the package style that a particular heat sink is designed to cool. The 7th digit determines the finish, and the 8th identifies the interface material, if one can be used for that particular style heat sink. The 9th and 10th digits define the PC board mounting method, and the 11th and 12th digits define the method of attachment of the package to the heat sink. For digits 8,9,10,11 and 12, the absence of any of those options is always designated by a zero in those positions. Important NOTE: The 12 digit part number sequence is a general format. Due to the different variations and styles of heat sinks, we have included an Option Index on pages 82–84 to show available options and accessories for the products covered in this catalog.

Standard board level: **5748 02 B 0 37 00 G**

A B C D E F G

A = Base Part Number
B = Package Style
C = Finish
D = Interface Material
E = PC Board Mounting
F = Package Mounting
G = RoHS Compliant

To order most Aavid Thermalloy heat sinks, you must use a 12 digit part number using the following options:

Digits 5-6: *Package style*

CODE	DEVICE
00	Blank
01	TO-218
02	TO-220, TO-216, TO-217
03	TO-3
04	TO-202
05	TO-5, TO-39
06	TO-66
08	TO-247
10	Multiwatt/SIP
21	Dual TO-218
22	Dual TO-220

Digit 7: *Finish*

CODE	DESCRIPTION
B	Black Anodize
D	Solderable 100% Tin Finish
J	Pre-Black Anodize
M	Green Anodize
U	Unfinished
V	AavSHIELD[3]
W	Black Anodize w/Black Paint

For additional information see page 110

Digit 8: *Interface material*

CODE	DESCRIPTION
0	None
1	One Kon-Dux™ Pad
2	Two Kon-Dux™ Pads
3	One In-Sil-8™ Pad
4	Two In-Sil-8™ Pad
7	One Hi-Flow® Pad
8	Two Hi-Flow® Pads

For additional information see pages 86 and 87

Digits 9-10: *PC Board mounting*

Solderable Wave-On™ mounts

CODE	STAND-OFF	THREAD
01	0.100"	#6-32
02	0.100"	#4-40
03	0.045"	#4-40
04*	0.100"	#6-32
05	0.045"	#6-32
07	0.100"	3.5mm
09	0.200"	#6-32
13	0.129"	#6-32

* 0.090 PCB (others 0.062")

For additional information see page 89

Solderable pins for board mounted extrusions

CODE	DESCRIPTION
21	Solid Pin with Stand Off Shoulder 0.050"
25	Solid Solderable Pin

For additional information see page 94

Solderable nut

CODE	DESCRIPTION	LENGTH
13	SNE-2 6-32 UNC-2B	0.305"
14	SNE-1 4-40 UNC-2B	0.305"

For additional information see page 94

Solderable staked on **tabs

CODE	DESCRIPTION	
28	Shur-Lock™ Tab	(0.130 for 0.062" PC Boards)
31	Centered Horizontal	(0.050 W x 0.130 L)
32	Centered Horizontal	(0.050 W x 0.130 L)
33	Centered Vertical	(0.062 W x 0.340 L)
34	Vertical Pair L & R	(0.075 W x 0.170 L)
35	Vertical Pair L & R	(0.097 W x 0.200 L)
36	Centered Vertical	(0.100 W x 0.150 L)
37	Centered Step	(0.062 W x 0.250 L with 0.125 wide step)
39	Centered Vertical	(0.050 W x 0.375 L)
40	Centered Vertical	(0.050 W x 0.245 L)
43	Centered Step	(0.050 W x 0.375 L)
48	Centered Vertical	(0.062 W x 0.280 L)
53	MT Tab Vertical Pair	(0.090 W x 0.125 L)
54	MT2 Tab Vertical Pair	(0.090 W x 0.125 L)
55	MT3 Tab Vertical Pair	(0.090 W x 0.125 L)
56	Bifurcated Tab Vertical Pair	(0.110 W x 0.125 with 0.190 step)
57	Bifurcated Tab Vertical Pair	(0.110 W x 0.125 with 0.100 step)

For additional information see pages 91–93

** For additional tab options, please contact Application Engineering at (603) 224-9988

Digits 11-12: *Package mounting*

Semiconductor mounts

CODE	DESCRIPTION	LENGTH
01	#6-32 Female	
02	#4-40 Female	
03	M-3 Female	
04	#6-32 Male	0.380"
05	#4-40 Male	0.380"

For additional information see page 90

Standard clips

Kool-Klips™
Sold separately

CODE	PART#
50	115000
51	115100
52	115200
53	115300
54	115400
62	116200

For additional information see page 97

Thermal clips

Factory applied to heat sink

CODE	PART#
32	TC-1
33	TC-10
34	TC-11
35	TC-12

For additional information see page 98

Studs

CODE	DESCRIPTION	LENGTH
06	SE-2 Stud #6-32	0.485"
07	SM-3 M-3 Male	0.350"
08	SE-1 Stud #6-32	0.350"
09	SE-3 Stud #4-40	0.350"
11	SF-1 M3 x 0.5	0.302"
14	SE-4 Stud #6-32	0.350"
17	SM-1M-3 Male	0.350"

For additional information see page 96

Clinch nuts

CODE	DESCRIPTION
12	CNE-42 4-40 Clinch nut
13	CNM-1 M3 X 0.5 Clinch nut

For additional information see page 95

AAVID THERMALLOY
www.aavidthermalloy.com

AMERICA
USA Tel: +1 (603) 224-9988 email: info@aavid.com

EUROPE
Italy Tel: +39 051 764011 email: sales.it@aavid.com
United Kingdom Tel: +44 1793 401400 email: sales.uk@aavid.com

ASIA
Singapore Tel: +65 6362 8388 email: sales@aavid.com.sg
Taiwan Tel: +886 (2) 2698-9888 email: sales@aavid.com.tw

How to decipher a Thermalloy origin part number?

Aavid Thermalloy features a variety of Thermalloy origin standard products that consist of a different part number sequence than the standard Aavid 12 digit part numbering system. In most cases, digits 1 through 4, designate the basic model number of the heat sink. Digits 5-6, designate the finish of the heat sink. Digits 6-13 can designate any number of different options that come with a specific model number. (Please refer to Option Index D on page 85 to see Aavid Thermalloy's offerings per base number.)

To order most Thermalloy origin heat sinks you must use the basic part numbering system below:

Standard board level: **6021** ___ – ___ - ___ **G**

A **B** **C** **D** **E**

A = Model Number
B = Finish
C = Productivity Enhancement (if applicable)
D = Second Productivity Enhancement (if applicable)
E = RoHS Compliant Suffix

Popular finishes*
(followed after base number in location B above)
B=Black Anodize
PB= Pre-Black Anodized
D=Tin Plated
U=Clean, No Finish
V=AavSHIELD[3]

*For additional information see page 110

Popular productivity enhancing options:
Digits (Figure C-D above)
P_= Solderable Roll Pins (see page 94)
TC_ _ = Thermal Clip (see page 98)
CNE_ _ = Clinch Nuts (see page 95)
CNM_= Clinch Nuts Metric (see page 95)
MT= Mounting Tabs (see page 93)
8223-CL03,8241-CL11 = Alignment Pad (see page 87)
SE-_= Solderable Studs (see page 96)
SF_= Mounting Studs (see page 96)
G_= Grafoil® Pad (see page 86)
SNM_= Solderable Nuts Metric (see page 94)
SNE= Solderable Nuts (see page 94)
BGS_= BGS Clip (page 18)

Note: For a wide range of part number specific options, please see our Aavid Option Index D on page 85

Option Index A

Available option codes for Aavid 12 digit part numbers. For additional information on option codes see "How to decipher an Aavid 12 digit part number" on page 80. To find the appropriate Option Index for a selected part number please refer to the main product section in the front of the catalog or "How to use this catalog" on page 2.

Ordering Codes

Base part	Finishes (page 110)				Solderable tabs (page 91–93)					Clips (page 97)	Wave-On™ mounts (page 89)				Kondux™ pads (page 86)		In-Sil-8™ pads (page 86)		Hi-Flow® pads (page 87)	Semiconductor mnts (page 90)				Studs (page 96)	
504102	B	U			53	54	55	56	57		01	02	03	05	1		3								
504222	B	U									01	02	03	05	2			4		01	02	03	05	07	08
506902	B	U									01	02	03	05	1		3								
507002	B	U	J		53	54	55	56	57		01	02	03	05	1		3			01	02	03	05	07	08
507102	B	U	J																						
507222	B	U	J	V	53	54	55	56	57		01	02	03	05	1	2	3	4		01	02	03	05	07	08
507302	B	U	J	V	33	36	39	40			01	02	03	05	1		3			01	02	03	05	07	08
530101	B	U		V						50	01	04	05	07	1	2	3		7						
530102	B	U								50	01	04	05	07	1	2	3		7						
530161	B	U								62	01	04	05	07	1	2	3								
530162	B	U								62	01	04	05	07	1	2	3								
530401	B	U								50	01	04	05	07	1	2	3		7						
530402	B	U								50	01	04	05	07	1	2	3		7						
530613	B	U	J	V	53	54	55	56	57							1	3								
530614	B	U	J		53	54	55	56	57							1	3								
530714	B	U		V	53	54	55	56	57							1	3								
530801	B	U								50	01	04	05	07	1	2	3		7						
530802	B	U								50	01	04	05	07	1	2	3		7						
530861	B	U								62	01	04	05	07	1	2									
530862	B	U								62	01	04	05	07	1	2									
534202	B	U			28	34	35			53					1										
534265	B	U			28	34	35			53							3		7						
542502	B	U	J	D										05	1		3			01	02	03	05	07	08
551002	B	U									01	02	03	05	1		3			01	02	03	05	07	08
563002	B	U	J	D													3								
569022	B	U									01	02	03	05						01	02	03	05	07	08
574102	B	U			32	33	37																		
574402	B	U			32	33	37																		
574502	B	U		V	32	33	37	48																	
574602	B	U			32	33	37	43																	
574802	B	U			33	37																			
574902	B	U			28	33	37	43																	
575002	B	U		D																					
575102	B	U		V											1		3								
576012	B	U		V											1		3								
576014	B	U		V											1		3								
576602	B	U	D														3								
577002	B	U		V	28	33	36	39	40		01	02	03	05	1		3			01	02	03	05	07	08
577102	B	U		V	28	33	36	39	40		01	02	03	05	1		3			01	02	03	05	07	08
577202	B	U	J	V	33	36	38	39	40		01	02	03	05	1		3			01	02	03	05	07	08
577922	B	U		V												2		4							
578622	B	U		V	28	32	34	35								2		4		01	02	03	05	07	08
579302	B	U																							
579402	B	U																							
579802	B	U			33																				
579902	B	U			33										1								05		
590102	B	U			36							02			1										
590302	B	U			36	37									1		3								
592201	B	U			34																				
592502	B	U			28	34	35				01	02	03	05	1		3			01	02	03	05	07	08
592902	B	U			28	34									1		3			01	02	03	05	07	08
593002	B	U		V	28	34	35								1		3			01	02	03	05	07	08
593101	B	U			36										1		3			01					
593202	B	U		V	28	34	35				01	02	03	05	1		3			01	02	03	05	07	08

AAVID THERMALLOY
www.aavidthermalloy.com

AMERICA
USA Tel: +1 (603) 224-9988 email: info@aavid.com

EUROPE
Italy Tel: +39 051 764011 email: sales.it@aavid.com
United Kingdom Tel: +44 1793 401400 email: sales.uk@aavid.com

ASIA
Singapore Tel: +65 6362 8388 email: sales@aavid.com.sg
Taiwan Tel: +886 (2) 2698-9888 email: sales@aavid.com.tw

Available Option codes for Aavid 12 digit part numbers. For additional information on option codes see "How to decipher an Aavid 12 digit part number" on page 80. To find the appropriate Option Index for a selected part number please refer to the main product section in the front of the catalog or "How to use this catalog" on page 2.

Ordering Codes

Base part	Finishes (page 110)	Clips (page 97–98)	Kondux™ pads (page 86)	In-Sil-8™ pads (page 86)	Hi-Flow® pads (page 87)	Semiconductor mounts (page 90)	Solderable pins (page 94)	Studs (page 96)	Clinch nuts (page 95)
513001	B U		1 2	3 4		01 03	21 25		
513002	B U		1 2	3 4			21 25		
513101	B U		1 2	3 4			21 25		
513102	B U		1 2	3 4		01 02 03	21 25		
513201	B U		1 2	3 4		01 05	21 25		
513202	B U V		1 2	3 4		01 02 03	21 25		
513301	B U		1 2	3 4		02	21 25		
513302	B U V		1 2	3 4		01 02	21 25		
529701	B		1 2	3 4			21 25		
529702	B		1 2	3 4			21 25		
529801	B		1 2	3 4		01 02	21 25	11	12
529802	B		1 2	3 4		01 02	21 25	11	12
529901	B	33 34	1 2	3 4		01 02 05	21 25	11	13
529902	B	33 34	1 2	3 4		01 02 05	21 25		
530001	B U	33	1	3		01	21 25		
530002	B U		1	3		02	21 25		
531002	B U V		1	3			21 25		
531102	B U V		1	3		02 03	21 25		
531202	B U V		1	3		01 02	21 25		
531302	B U V		1	3		02	21 25		
532602	B		1	3		01 02	21 25		
532702	B		1	3		01	21 25		
532802	B		1	3		02	21 25		
533001	B U	51	1	3	7		21 25		
533002	B U	51	1	3	7		21 25		
533101	B U	51	1	3	7		21 25		
533102	B U	51	1	3	7		21 25		
533201	B U	51	1	3	7		21 25		
533202	B U	51	1	3	7		21 25		
533301	B U	51	1	3	7		21 25		
533302	B U	51	1	3	7		21 25		
533401	B	52	1				21 25		
533402	B	52	1	3			21 25		
533421	B	52	1 2	3			21 25		
533422	B	52	1 2	3			21 25		
533501	B	52	1	3			21 25		
533502	B	52	1	3			21 25		
533521	B	52	1 2				21 25		
533522	B	52	1 2	3			21 25		
533601	B	52	1	3			21 25		
533602	B	52	1	3			21 25		
533621	B	52	1 2	3			21 25		
533622	B	52	1 2	3			21 25		
533701	B	52	1				21 25		
533702	B	52	1	3			21 25		
533721	B	52	1 2	3			21 25		
533722	B	52	1 2				21 25		
533802	B U	54	1 2	3	7		21 25		
533902	B U	54	1 2	3	7		21 25		
534002	B U	54	1 2	3	7		21 25		
581001	B U		1	3			21 25		
581002	B U V		1	3			21 25		
581101	B U		1	3			21 25		
581102	B U		1	3			21 25		
581201	B U		1	3			21 25		
581202	B U		1	3			21 25		

Option Index C

Available option codes for Aavid 12 digit part numbers. For additional information on option codes see "How to decipher an Aavid 12 digit part number" on page 80. To find the appropriate Option Index for a selected part number please refer to the main product section in the front of the catalog or "How to use this catalog" on page 2.

Ordering Codes

Base part	Finishes (page 110)	Wave-On™ mounts (page 89)	Kondux™ pads (page 86)	In-Sil-8™ pads (page 86)	Semiconductor mounts (page 90)	Solderable tabs (page 91–93)	Solderable nuts (page 94)	Solderable studs (page 96)
500103	B U	01 02 04 05 07	1	3				06 08 09
500203	B U	01 02 04 05 09	1	3				06 08 09
500303	B U	01 02 03 04 05	1	3				06 08 09
500403	B U	01 02 03 04 05	1	3				06 08 09
501303	B U	01 03 04 05 07	1	3			13	06 07 08 09
501403	B U	01 02 03 05 07	1	3			13	06 08 17
501503	B U V	01 03 05 07 09	1	3	04		13	06 08 17
501603	B U V	01 02 04 05 07	1	3			13 14	08 17
505103	B U	01 02 03 04 05	1	3				
505303	B U	01 02 03 04 05	1	3				
505403	B U	01 02 03 04 05	1	3				
506003	B U						13 14	
506304	B U	01				53	14	
519703	B U	01 03 04 05 07	1	3				
519803	B U	01 03 04 05 07	1	3				
519903	B U V	01 03 04 05 09	1	3				
520103	B U V	01 04 05 07 09	1	3				
520328	B U V							
520329	B U V							08
566010	B U					28 31 34 37		
566902	B U					31 37 39 40		
569003	B U V	01 02 04 05	1	3				06 08 17
574204	B U					32 33		
575603	B U V	01 03 04 05	1	3				
575703	B U	01 03 04 05	1	3				
575803	B U	01 04 05 07 09	1	3				
575903	B U	01 03 04 05 07	1	3				
576103	B U V	01 02 03 04 05	1	3				
576203	B U V	01 02 03 04 05	1	3				
576303	B U	01 02 04 05	1	3				
576403	B U V	01 02 04 05	1	3				
576802	B U V					31 32 33 37 39 40		
576904	B U	01 02 03 05						
577304	B U	01 02 03 05			01			
577404	B U V	01 02 03 05			05			09 11
579003	B U	05						
579604	B U					32 33		
579704	B U					32 33		
584000	B U					33 35		
591202	B U					31 33 37 38 39 40		
591302	B U					28 40		

AAVID THERMALLOY
www.aavidthermalloy.com

AMERICA
USA Tel: +1 (603) 224-9988 email: info@aavid.com

EUROPE
Italy Tel: +39 051 764011 email: sales.it@aavid.com
United Kingdom Tel: +44 1793 401400 email: sales.uk@aavid.com

ASIA
Singapore Tel: +65 6362 8388 email: sales@aavid.com.sg
Taiwan Tel: +886 (2) 2698-9888 email: sales@aavid.com.tw

Available option codes for Thermalloy origin part numbers. For additional information on option codes see "How to decipher a Thermalloy Origin part number" on page 81. To find the appropriate Option Index for a selected part number, refer to the main product section in the front of the catalog or "How to use this catalog" on page 2.

Ordering Codes

Base part	Finishes (page 110)	Mounting tabs (page 93)	Clips (page 98)	Solderable studs & pins (page 94–96)	Device mtg. studs (page 96)	Clinch nuts (page 95)	Solderable nuts (page 94)	Alignment pads (page 87)	Grafoil® pads (page 86)
6021	B U PB				SF1	CNM1			G5
6022	B U PB				SF1 SF2	CNM1			
6025	PB D		TC-10		SF1 SF3	CNE42			G5
6109	B U PB	MT MT5	TC-1	SE3 SE1	SF1	CNE42			G5
6110	B U PB	MT		SE1 SM3		CNE42			
6225	B U PB	MT	TC-10		SF1				G5
6230	B U PB D								
6232	B U PB	MT MT3 MT5	TC-1		SF1				G5
6238	B U PB	MT MT5 MT6							G5
6239	B U	MT							
6374	B			P2					
6380	B			P2		CNE42			
6396	B			P2 P3		CNM1 CNM2			
6398	B		TC-6	P2		CNE42 CNE43			G7
6399	B		TC-6	P2		CNM2			G7
6400	B			P2					
7019	B U PB	MT MT6		SE3	SF1		SNM1		
7020	B U	MT MT2 MT5 MT6	TC-10 TC-11 TC-12	SE3		CNM1 CNE42		8223-CL03	G5 G4
7021	B U	MT MT5 MT6	TC-10 TC-11 TC-12			CNE42		8223-CL03	G5
7022	B U PB	MT MT5	TC-1 TC-11 TC-12	SE3	SF1			8241-CL11 8223-CL03	
7023	B U	MT MT5	TC-1 TC-6 TC-7 TC-12				SNE2		G4
7025	B U	MT MT3 MT6	TC-12	SE3				8223-CL03	

In-Sil-8™

These silicone based pads provide both thermal conductivity and electrical isolation. In-Sil-8™ pads have a fiberglass carrier that withstands the rigors of assembly, harsh environments and aging under continuous use. In-Sil-8™ pads install faster than traditional mica and grease and will not contaminate solder baths. Screw mounting is recommended to achieve the best thermal performance.

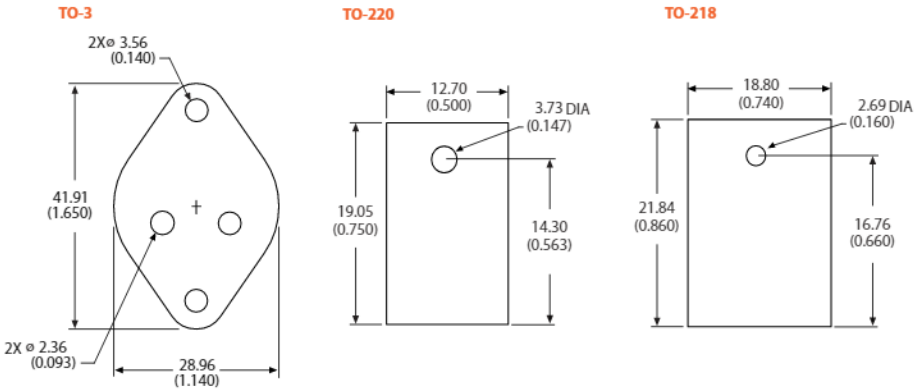

ORDERING INFORMATION

example 12 digit part **507222B_0000G**

Ordering code

The shape and hole pattern of the heat sink will determine the shape and hole pattern of the pad. If you are ordering a heat sink which mounts to a semiconductor on both sides, the ordering code for two pads should be used. To order additional In-Sil™ pads separate, or factory applied variations please contact an Aavid sales rep for inquiries.

Ordering code	Description
0	No pads
3	One In-Sil-8™ pad
4	Two In-Sil-8™ pads

MATERIAL PROPERTIES

Color	Grey
Thickness	0.18 (0.007)
Breakdown voltage	3500
Dielectric constant	5.5

	TO-3	TO-220	TO-218
Thermal resistance (approx.)	0.33	1.25	0.77
Screw size	6-32	4-40	4-40
Torque in–lbs	6–8	4–6	4–6

KonDux™ / Grafoil® Conducta-Pad**

Kondux™ interface pads are a cost effective alternative to thermally conductive grease compounds. Kondux™ pads are electrically conductive and ideal for use with small, discrete semiconductors. Aavid pre-applies Kondux™ to your heatsink to enhance heat conductance from the semiconductor case and speed your manufacturing process.

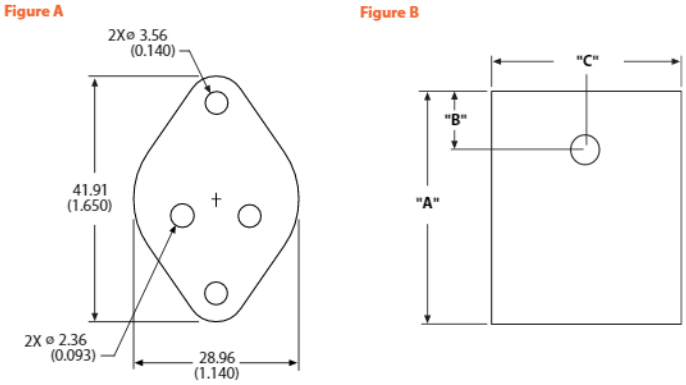

ORDERING INFORMATION

example 12 digit part **575703B_0000G**

Ordering code

The shape and hole pattern of the heat sink will determine the shape and hole pattern of the pad. If you are ordering a heat sink which mounts to a semiconductor on both sides, the ordering code for two pads should be used.

Ordering code	Device	Figure	"A" Dim	"B" Dim	"C" Dim
1 or 2*	TO-3	A			
1 or 2*	TO-218	B	19.05 (0.750)	4.57 (0.180)	15.24 (0.600)
1 or 2*	TO-220	B	15.88 (0.625)	2.68 (0.105)	10.67 (0.420)

*Factory applied only
One KonDux™ pad

example
Thermalloy origin part **6109B - __ G**

A B C

A = Model number
B = Grafoil® pad
C = RoHS compliant

Suffix	Device	Figure	"A" Dim	"B" Dim	"C" Dim
G1	TO-3	A			
G4	TO-218	B	19.30 (0.760)	4.83 (0.190)	15.75 (0.620)
G5	TO-220	B	16.51 (0.650)	3.43 (0.135)	10.67 (0.420)
G7	Multiwatt	B	17.53 (0.690)	2.92 (0.115)	20.07 (0.790)

MATERIAL PROPERTIES

Color	Black (metallic)
Thickness	0.13 (0.005)
Thermal resistance	See Graph pg 10
Electrical resistivity	15 x 10^{-6} Ohms
Compression strength: for 10% reduction in thickness	580 psi
Tensile strength	650 psi
Ultimate compression strength	12500 psi
Service temperature	-240°C to +300°C
Liner	None

** The Grafoil® name was originally marketed by Thermalloy and is the same material as Kondux™
Grafoil® is a registered trademark of the Union Carbide Company

AAVID THERMALLOY
www.aavidthermalloy.com
AMERICA USA Tel: +1 (603) 224-9988 email: info@aavid.com
EUROPE Italy Tel: +39 051 764011 email: sales.it@aavid.com
United Kingdom Tel: +44 1793 401400 email: sales.uk@aavid.com
ASIA Singapore Tel: +65 6362 8388 email: sales@aavid.com.sg
Taiwan Tel: +886 (2) 2698-9888 email: sales@aavid.com.tw

Hi-Flow®*

Aavid Thermalloy has added a phase change pad to its line-up. These pads provide low thermal resistance and electrical isolation for low pressure spring mount applications. Above the phase change temperature the material flows to fill in surface irregularities and maximize the heat conduction path.

TO-3

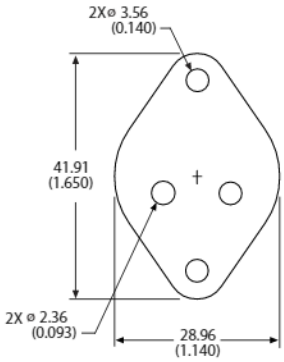

TO-220

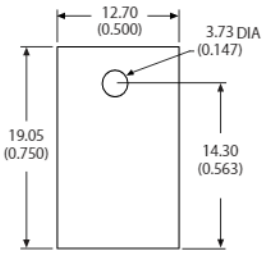

TO-218

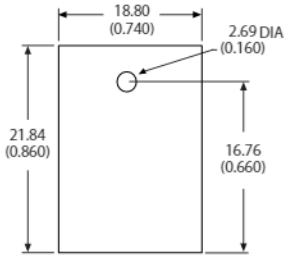

ORDERING INFORMATION

example 12 digit part **530101B 5150G**

Ordering code

The shape and hole pattern of the heat sink will determine the shape and hole pattern of the pad. If you are ordering a heat sink which mounts to a semiconductor on both sides, the ordering code for two pads should be used. To order additional Hi-Flow® pads separate, or factory applied variations please contact an Aavid sales rep for inquiries.

Ordering code	Description
0	No pads
7	One Hi-Flow® pad
8	Two Hi-Flow® pads

MATERIAL PROPERTIES

Reinforcement carrier	Polymide
Thickness	0.127 (0.005)
Continuous use temp (°C)	150
Phase change temp(°C)	55
Dielectric breakdown voltage (Vac)	5000
Dielectric constant (1000 Hz)	4.5
Volume resistivity (Ohm-meter)	1012

Thermal impedance vs. pressure

Pressure	10	25	50	200
TO-220 Thermal performance (°C/W)	1.15	1.14	1.12	1.1

* Hi-Flow® is a registered trademark of the Bergquist Company

Alignment Pads

Solderable alignment pads are an innovative way to attach the heat sink to your transistor that could cut your assembly time by more than half. Alignment pads provide cost effective solderability, while providing numerous additional benefits. Alignment pads are factory applied and can be bought separately as well. Please refer to accessory Index D on page 85.

ORDERING INFORMATION

example

Thermalloy origin part **7022B–8223–CL03 G**

A B C

Suffix	Device	Figure
8223-CL03G	TO-220	B
8241-CL11G	TO-218	A

A = Model number
B = Alignment pad
C = RoHS compliant

Figure A

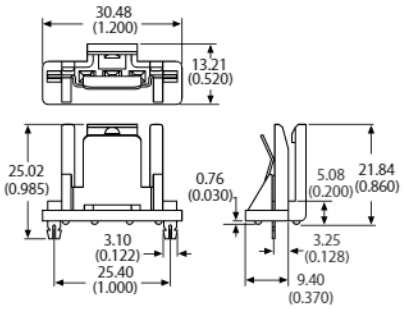

Figure B

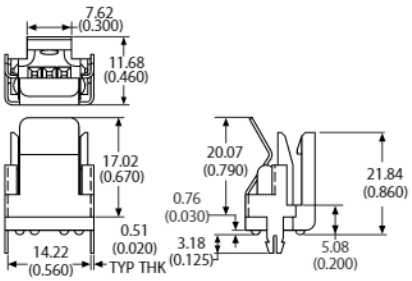

Typical installation

Shown with part number 8241-CL11

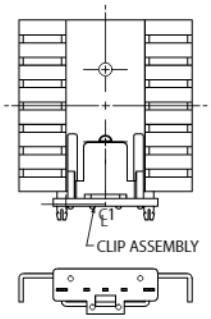

Recommended hole pattern for 8223-CL03G

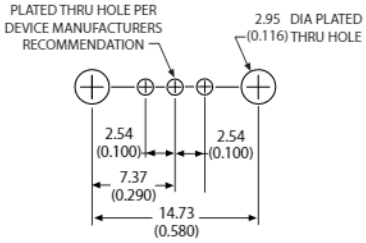

Recommended hole pattern for 8241-CL11G

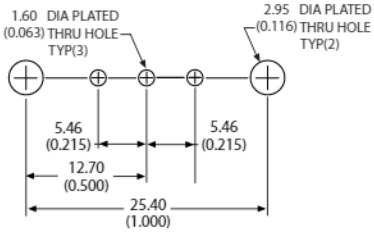

Interface Material / Double Sided Tape

Double-sided thermal tapes adhere the heat sink to the device and offer good thermal characteristics. They are easy to apply, require no curing time, can be electrically conductive or isolating, and need no mechanical support to provide thermal or physical contact between the device and the heat sink. Aavid can apply one side to a heat sink.

ORDERING INFORMATION

example 12 digit part **375224B000 _ _G**

Ordering code

Ordering code	Tape option
31	T414
32	T405R
33	T412
34	T410R
35	T411

T414 for ceramic or metal packages

Uses a 0.001 inch (0.03 mm) Kapton MT™ filled polymide film coated on both sides with high-bond strength, pressure-sensitive acrylic adhesive that is loaded with aluminum oxide particles. This provides both good thermal performance and excellent electrical isolation.

Color	Beige
Electrical function	Insulating
Thickness	0.127 mm (0.005)
Carrier	Kapton MT™
Thermal impedance	0.60 °C-in²/w
Thermal conductivity	0.37 w/m-k
Breakdown voltage	5000 VAC
Volume resistivity	5 x 10^{15} Ohm-cm
Lap shear adhesion	125 (0.862) psi
Die shear adhesion	
Aluminum 25°C	150 psi
Aluminum 150°C	15 psi
Creep adhesion	
25°C @ 12psi	>50 days
150°C @ 12psi	>10 days

T405R for ceramic or metal packages

Uses a 0.002 inch (0.05 mm) aluminum foil core coated on both sides with high-bond strength, pressure-sensitive acrylic adhesive that is loaded with aluminum oxide particles. The aluminum foil provides added thermal conductivity for applications where electrical isolation is not required. The combination of filter, expanded metal and embossed surface enhances both tape conformability and thermal performance.

Color	White
Electrical function	Conductive
Thickness	0.006 (0.015)
Carrier	Aluminum
Thermal impedance	0.54 °C-in²/w
Thermal conductivity	0.50 w/m-k
Breakdown voltage	N/A
Volume resistivity	3 x 10-2 Ohm-cm
UL flammability	94V-0
Rating	U.L.94
Lap shear adhesion	134 psi
Die shear adhesion	
Aluminum 25°C	125 psi
Aluminum 150°C	55 psi
Alum.oxide 25°C	145 psi
Alum.oxide 150°C	60 psi
Creep adhesion	
25°C @ 12 psi	>50 days
150°C @ 12 psi	>50 days

T412 for ceramic or metal packages

Uses an expanded foil carrier coated on both sides with high-bond strength, pressure sensitive acrylic that is loaded with titanium diboride particles. The combination of filter, expanded metal and embossed surface enhances both tape conformability and thermal performance.

Color	Grey
Electrical function	Conductive
Thickness	0.009 (0.23)
Carrier	Expanded aluminum
Thermal impedance	0.25 °C-in²/w
Thermal conductivity	1.40 w/m-k
Breakdown voltage	N/A
Volume resistivity	N/A
UL flammability	N/A
Lap shear adhesion	70 psi
Die shear adhesion	
Aluminum 25°C	135 psi
Aluminum 150°C	25 psi
Alum.oxide 25°C	125 psi
Alum.oxide 150°C	40 psi
Creep adhesion	
25°C @ 12 psi	>50 days
150°C @ 12 psi	>10 days

Note: Double Sided Tapes are factory applied only.

T410R / T411 for plastic packages

T410R thermally conductive tape consists of a high bond strength, pressure sensitive acrylic adhesive loaded with aluminum oxide and coated onto a 0.002 inch (0.05mm) aluminum foil carrier. The other side of the foil carrier has a silicone pressure sensitive adhesive which provides excellent adhesion to silicone-contaminated plastics and other low energy surfaces.

T411 thermally conductive tape consists of a high bond strength, pressure sensitive adhesive with an aluminum mesh carrier layer. The mesh carrier allows the tape to conform to curved surfaces of plastic molded IC packages, providing a high adhesive strength attachment for heat sinks. The high performance silicone PSA allows adhesion to silicone-contaminated plastics and other low energy surfaces.

Typical properties	T410R	T411
Construction	Acrylic	Silicone
Adhesive (to heat sink side)		
Color	White	Clear (silver)
Carrier	Aluminum foil	Aluminum mesh
Adhesive (onto component side)	Silicone	Silicone
Color (to component side)	Clear (Silver)	Clear (Silver)
Thickness, mm (inch)	0.18 (0.007)	0.28 (0.011)
Thermal impedance @<1 psi °C-cm²/w (°C-in²/w)	7.1 (1.1)	6.5 (1.0)
Operating temperature range, °C	-50 to + 150	-50 to + 150
Lap shear adhesion, psi (MPa)	60 (0.414)	14 (0.094)
Die shear adhesion, psi (MPa) steel/FR4		
25°C	170 (1.172)	80 (0.552)
125 °C	40 (0.276)	20 (0.138)

AAVID THERMALLOY
www.aavidthermalloy.com

AMERICA
USA Tel: +1 (603) 224-9988 email: info@aavid.com

EUROPE
Italy Tel: +39 051 764011 email: sales.it@aavid.com
United Kingdom Tel: +44 1793 401400 email: sales.uk@aavid.com

ASIA
Singapore Tel: +65 6362 8388 email: sales@aavid.com.sg
Taiwan Tel: +886 (2) 2698-9888 email: sales@aavid.com.tw

Wave-On™ Mounts

Solderable mounts can be factory installed to practically every board-mountable heat sink and flat sided extrusion. The female threaded through holes permit pre-assembly to the semiconductor via machine screws , allowing the heat sink/semiconductor package to be treated as one unit when fitted in PC board through holes for wave soldering.

Typical Wave-On™ mount installation

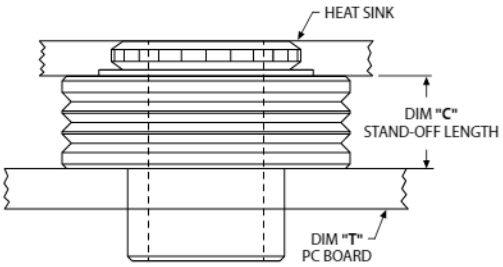

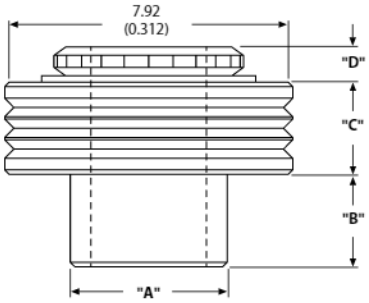

FEATURES

Saves production time and cost

- Cuts production steps by half
- Factory installation eliminates steps
- Permits soldering in one step
- All the benefits of female threaded mount
- Automated fastening
- Excellent solderability

Better thermal performance

- Built in stand-off adds air space between PCB and heat sink for improved air flow and easier cleaning
- No lockwashers, nuts or separate mounts with various thread lengths

ORDERING INFORMATION

example part **574802B0 __ 00G**

Ordering code

Ordering code	Model	"A" Dim	"B" Dim	"C" Dim	"D" Dim	Threaded thru holes
01	E	4.32 (0.170)	2.54 (0.100)	2.54 (0.100)	0.96 (0.038)	#6-32
02	EA	3.43 (0.135)	2.54 (0.100)	2.54 (0.100)	0.96 (0.038)	#4-40
03	EG	3.43 (0.135)	2.54 (0.100)	1.14 (0.045)	0.96 (0.038)	#4-40
04	EH	4.32 (0.170)	3.43 (0.135)	2.54 (0.100)	0.96 (0.038)	#6-32
05	EK	4.32 (0.170)	2.54 (0.100)	1.14 (0.045)	0.96 (0.038)	#6-32
07	EM	4.32 (0.170)	2.54 (0.100)	2.54 (0.100)	0.96 (0.038)	3.5MM
09	ER	4.32 (0.170)	2.54 (0.100)	5.08 (0.200)	0.96 (0.038)	#6-32

Model	Dia of PCB plated thru hole	PCB thickness "T"
EA, EG	3.68 (0.145)	1.57 (0.062)
E, EK, EM, ER	4.75 (0.187)	1.57 (0.062)
EH	4.75 (0.187)	2.29 (0.090)

Female Semiconductor Mounts

- Fastens semiconductor to heat sink fast and efficiently
- Up to 10 times faster than fastening with standard nuts and bolts
- Used with most JEDEC case sizes, factory installed

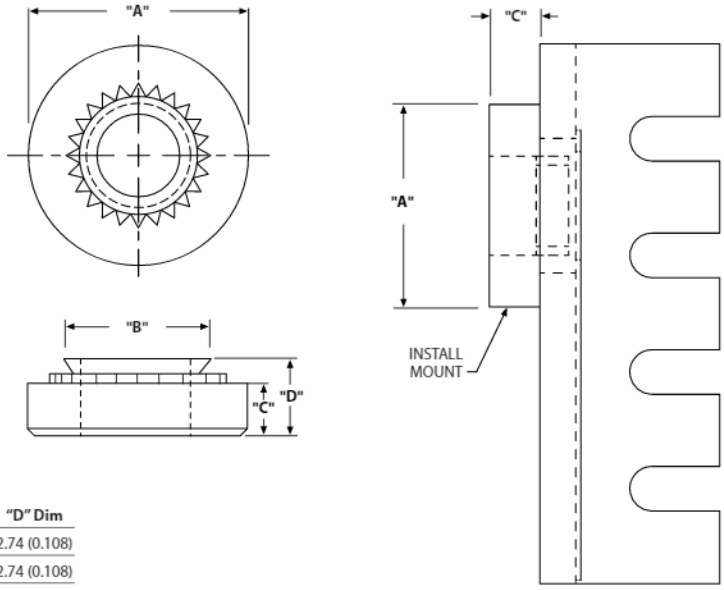

ORDERING INFORMATION

example 12 digit part **542502B000 _ _G**

Ordering code

Ordering code	Thread	"A" Dim	"B" Dim	"C" Dim	"D" Dim
01	#6-32	7.11 (0.280)	4.75 (0.187)	1.78 (0.070)	2.74 (0.108)
02	#4-40	6.35 (0.250)	4.19 (0.165)	1.78 (0.070)	2.74 (0.108)
03	3.00 (0.118)	6.35 (0.250)	4.22 (0.166)	1.50 (0.059)	2.47 (0.097)

Male Semiconductor Mounts

- Captive male studs for semiconductor attachments
- Used with most JEDEC case sizes, factory installed

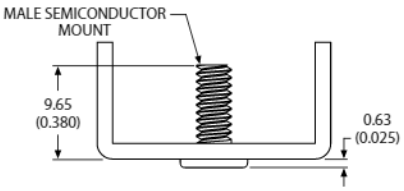

ORDERING INFORMATION

example 12 digit part **507302B000 _ _G**

Ordering code

Ordering code	Thread
04	#6-32
05	#4-40

AAVID THERMALLOY
www.aavidthermalloy.com

AMERICA
USA Tel: +1 (603) 224-9988 email: info@aavid.com

EUROPE
Italy Tel: +39 051 764011 email: sales.it@aavid.com
United Kingdom Tel: +44 1793 401400 email: sales.uk@aavid.com

ASIA
Singapore Tel: +65 6362 8388 email: sales@aavid.com.sg
Taiwan Tel: +886 (2) 2698-9888 email: sales@aavid.com.tw

Shur-Lock™ Tabs

Aavid's Shur-Lock™ self locking stand-off tab (U.S. Patent #5,437,561) positively secures any heat sink to the printed circuit board. This Shur-Lock™ tab exhibits many unique design features.

The rounded and bifurcated tip of the Shur-Lock™ solderable tab has been designed to easily snap into any 0.093" diameter hole. Once through the hole, the tab provides a positive resistance to backing or falling out of the hole. In addition, the spring action between the tab and the plated through hole prevents leaning or lift-off of the heat sink prior to or during the soldering process. The tip extension of the Shur-Lock™ tab has been designed to protrude less than 0.060" beyond the back of a standard 0.0625" PC board, which is below the normal lead trimming allowance for assembled PCBs.

Shur-Lock's™ stand-off design facilitates the cleaning of assembled PCBs and permits electrical traces to be routed under the heat sink. The wide base supports of the tab further improve the stability of the heat sink assembly.

ORDERING INFORMATION

example 12 digit part **574802B0 _ _ 00G**

Ordering code

PRODUCT INFORMATION

Material	Spring steel
Finish	Tin plating over a copper flash
Pull-out force*	70 lbs/tab minimum
Recommended	
PCB hole diameter	0.092" – 0.096"
PCB thickness	0.065" – 0.068"

Variations of the above specifications are possible. Contact Aavid Thermalloy for additional details for use with thicker PCB sizes, such as 0.093" or other hole diameters.
*Vertical force applied to the sink-tab joint.

FEATURES

- Positive PCB engagement
- Integrated PCB stand-off
- Quick "snap-in" assembly design
- Reduces installed assembly cost
- Designed for rugged shock and vibration environments
- Can be installed on a variety of stamped and extruded board level heat sinks

Factory applied only

Tab ordering code 28

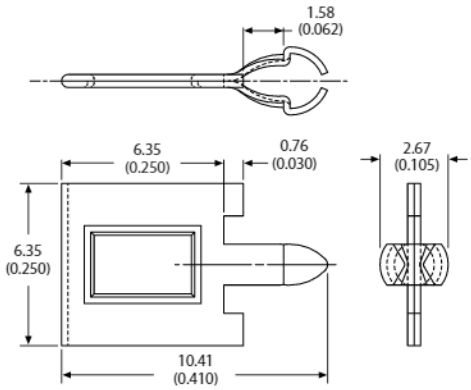

Solderable Staked on Tabs

Aavid solderable tabs stake onto heat sinks for solder mounting into the PC board. The tabs are available in a variety of lengths, widths and thicknesses.

Tabs are factory applied for both vertical and horizontal mountings including: step tabs, which keep the heat sink elevated above the board, and tabs with a triangular base for extra stability.

Many of Aavid's tabs are customized. Below are examples of standard tabs. Please consult Aavid's customer service department for information about other tab options.

ORDERING INFORMATION

example 12 digit part **574802B0 _ _ 00G**

Ordering code

Tab ordering code 31

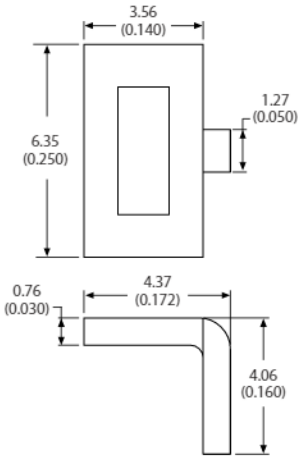

Tab ordering code 32

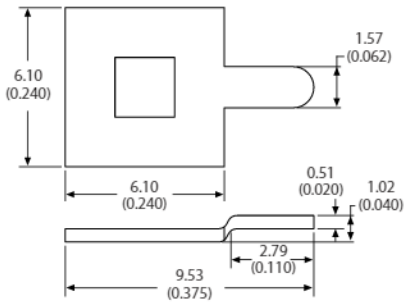

Tabs

Tab ordering code 33

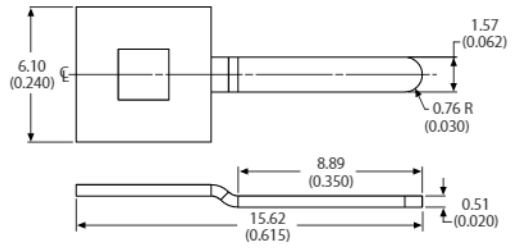

Tab ordering code 34

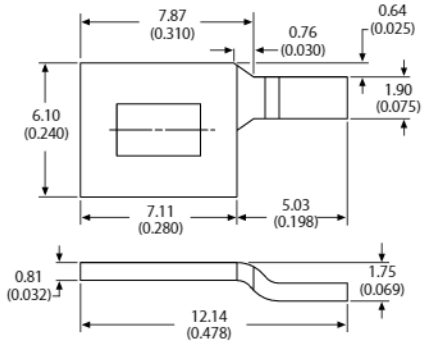

Note: The drawing above shows the right hand of a matched pair which are supplied mounted to the heat sink.

Tab ordering code 35

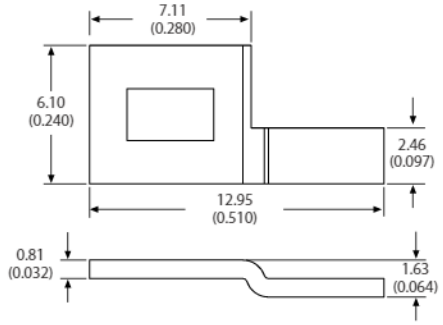

Tab ordering code 36

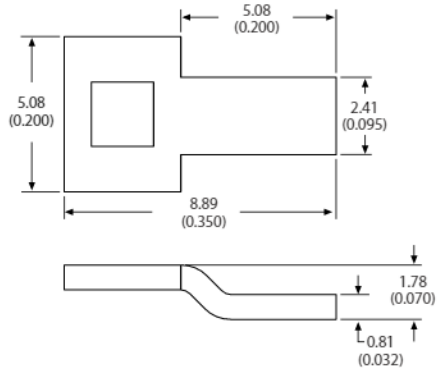

Tab ordering code 37

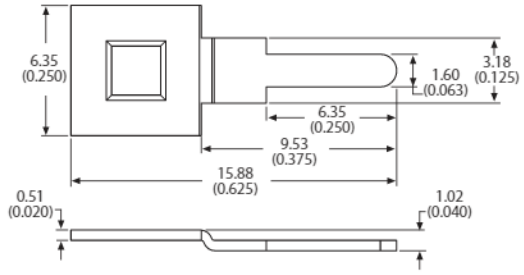

Tab ordering code 39

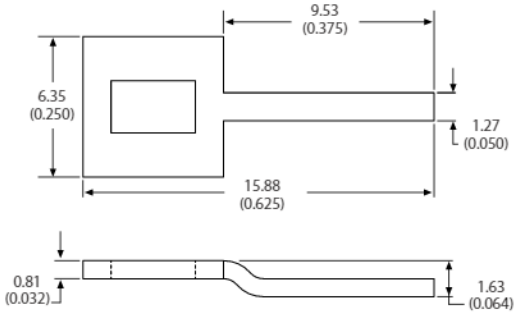

AAVID THERMALLOY
www.aavidthermalloy.com

AMERICA
USA Tel: +1 (603) 224-9988 email: info@aavid.com

EUROPE
Italy Tel: +39 051 764011 email: sales.it@aavid.com
United Kingdom Tel: +44 1793 401400 email: sales.uk@aavid.com

ASIA
Singapore Tel: +65 6362 8388 email: sales@aavid.com.sg
Taiwan Tel: +886 (2) 2698-9888 email: sales@aavid.com.tw

Tab ordering code 40

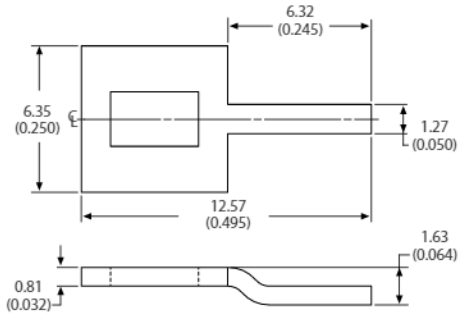

Tab ordering code 43

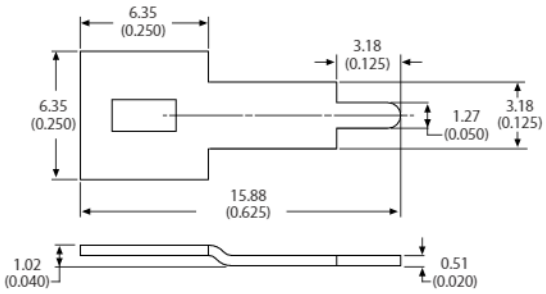

Solderable Mounting Tabs

Heat sinks ordered with solderable mounting tabs have tin-plated spring steel tabs permanently locked onto the heat sink to provide wave solderability. The solderable tabs are mounted on the heat sink after anodizing, thus eliminating any special coating or handling. The result is a wave solderable heat sink with black anodized performance.

FIGURE A

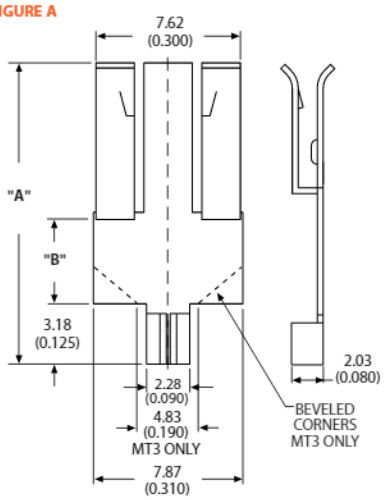

FIGURE B

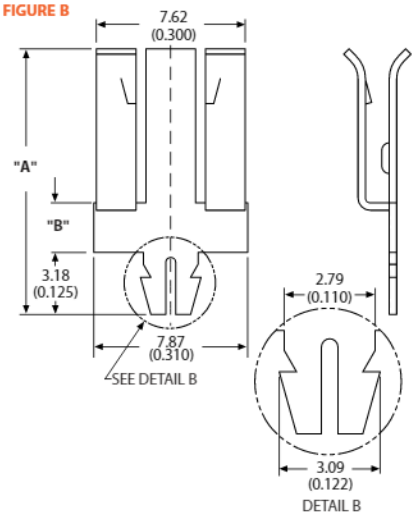

ORDERING INFORMATION

example 12 digit part **574802B0 _ _ 00G**

Ordering code

example Thermalloy origin part **6070B– ___ G**

A = Model number
B = Mounting tab suffix
C = RoHS compliant

Typical Installation

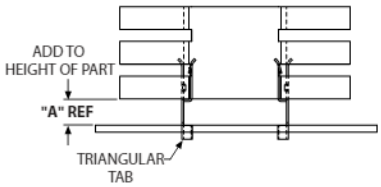

Suffix	Ordering code	Stand-off height	Features	"A" Dim	"B" Dim	Figure	Recommended PCB plated thru hole:
MT	53	5.21 (0.205)	Solderable mounting tab	15.88 (0.625)	4.83 (0.190)	A	2.90 ± 0.10 (0.114 ± 0.004)
MT2	54	8.51 (0.335)	Solderable mounting tab	19.18 (0.755)	8.13 (0.320)	A	2.90 ± 0.10 (0.114 ± 0.004)
MT3	55	5.21 (0.205)	50 degree beveled corners on stand-off portion reducing board footprint from 7.87 (0.310) to 4.83 (0.190) width. Only tab with this feature.	15.88 (0.625)	4.83 (0.190)	A	2.90 ± 0.10 (0.114 ± 0.004)
MT5	56	5.21 (0.205)	Bifurcated tabs in lieu of triangular shape	15.88 (0.625)	4.83 (0.190)	B	2.95 ± 0.05 (0.116 ± 0.002)
MT6	57	2.92 (0.115)	Bifurcated tabs in lieu of triangular shape	13.59 (0.535)	2.54 (0.100)	B	2.95 ± 0.05 (0.116 ± 0.002)

Notes: Mounting tabs have unique locking features built into their design. Aavid Thermalloy adds to standard and custom heat sinks. For this reason, the tabs are factory applied, and cannot be sold separately. Please see page 85 for additional tab options.

Solderable Pins / Solderable Nuts

Solderable Pins

Vertically mounted, extruded heat sinks are converted to wave solderable with the addition of solderable roll pins. Roll pins are available with stand-off shoulders in different heights for easier cleaning after wave soldering.

FIGURE A

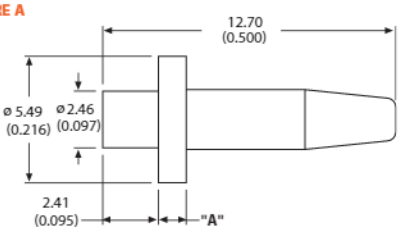

FIGURE B

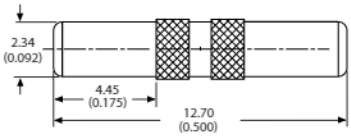

Pin 25

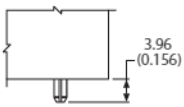

Pin P2-P3

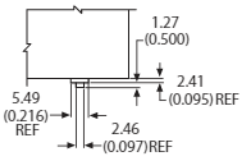

Typical installation P2-P3

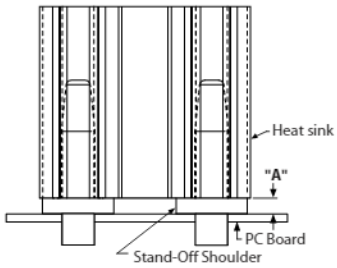

ORDERING INFORMATION

example 12 digit part **529902B0 _ _ 00G**

Ordering code

example Thermalloy origin part **6396B– __ G**

A B C

A = Model number
B = Solid pin suffix
C = RoHS compliant

Suffix	Ordering code	Description	"A" Dim	Figure
P2	21	Solid pin w/stand-off shoulder 0.050"	0.050	A
P3	N/A	Solid pin w/stand-off shoulder 0.125"	0.125	A
N/A	25	Solid solderable pin		B

Solderable Nuts

Solderable nuts are permanently swaged into the heat sink for quick pre-assembly with the transistor. Screws are used to mount to the heat sink and are installed from the top. Solderable nuts feature a closed end that prevents solder from wicking into threads and trapping contaminants or flux. Heat sink and transistor are then handled as a single component and dropped into plated-thru holes in the PC board for wave soldering. (Solderable nuts require slightly larger printed circuit board hole sizes)

FEATURES

- Pre-mounted to heat sink at factory
- Ease of pre-assembly in production
- Mechanical and electrical integrity
- Wave solderability

ORDERING INFORMATION

example 12 digit part **506003B0 _ _ 00G**

Ordering code

example Thermalloy origin part **7019B– ____ G**

A B C

A = Model number
B = Solderable nut suffix
C = RoHS compliant

Suffix	Ordering code	Dia of PCB thru hole	Thread
SNM-1	N/A	4.95 (0.195)	M3X0.5
SNE-1	14	4.95 (0.195)	4-40 UNC-2B
SNE-2	13	4.95 (0.195)	6-32 UNC-2B

Note: If a part number requires 2 solderable nuts, simply add a "/2" after the solderable nut character suffix on Thermalloy origin parts.

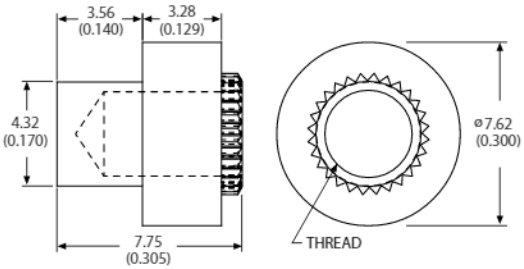

Mechanical drawings showing heat sinks with solderable nuts

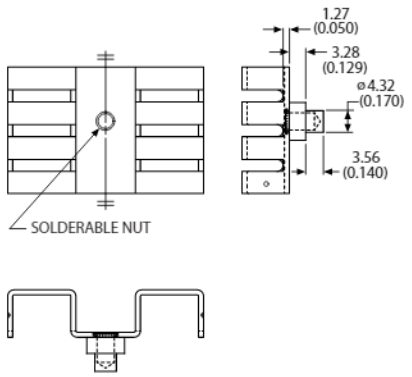

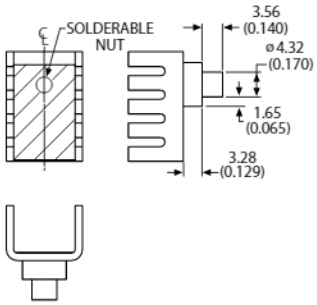

AAVID THERMALLOY
www.aavidthermalloy.com

AMERICA
USA Tel: +1 (603) 224-9988 email: info@aavid.com

EUROPE
Italy Tel: +39 051 764011 email: sales.it@aavid.com
United Kingdom Tel: +44 1793 401400 email: sales.uk@aavid.com

ASIA
Singapore Tel: +65 6362 8388 email: sales@aavid.com.sg
Taiwan Tel: +886 (2) 2698-9888 email: sales@aavid.com.tw

Clinch Nuts

Clinch nuts are threaded nuts that allow quick assembly of the transistor to the heat sink. A single screw mounts the transistor to the heat sink, reducing your hardware requirements. Clinch nuts are permanently pressed into the heat sink, and come in a variety of English and Metric threads–CNE designates an English thread, and CNM designates a Metric thread.

FIGURE A

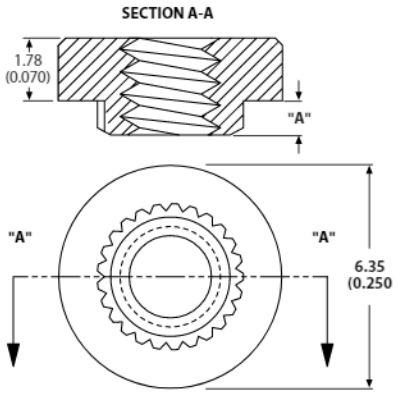

FIGURE B

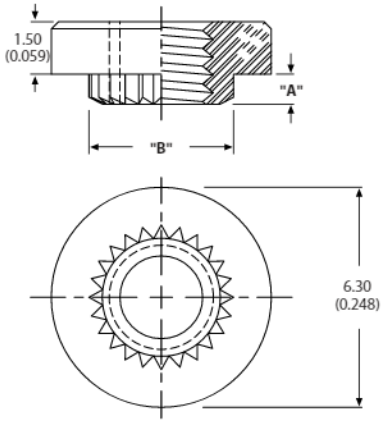

ORDERING INFORMATION

example 12 digit part **529801B000 _ _ G**

Ordering code

example Thermalloy origin part **7019B– _____ G**

A B C

A = Model number
B = Clinch nut suffix
C = RoHS compliant

Suffix	Ordering code	Thread	"A" Dim	"B" Dim	Figure
CNE42	12	4-40 UNC-2B	0.96 (0.038)		A
CNE43	N/A	4-40 UNC-2B	1.37 (0.054)		A
CNM1	13	M3 X 0.5	0.76 (0.030)	4.06 (0.160)	B
CNM2	N/A	M3 X 0.5	0.96 (0.038)	4.22 (0.166)	B

Mechanical drawing showing heat sink with clinch nut

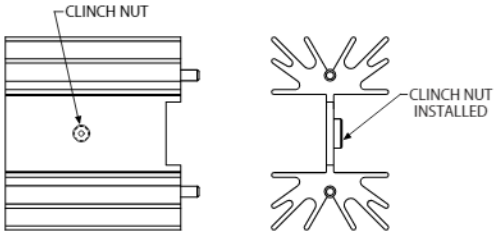

Solderable Studs

Threaded solderable studs are permanently swaged in place for quick pre-assembly with the transistor. The device is placed over the stud (s) followed by the lock washer and nut. This entire component is then dropped into plated-thru holes in the printed circuit board for wave soldering. The end of the stud is tin-plated for excellent solderability and extends only 0.040" below a 0.062" PC board to clear lead trimming saws.

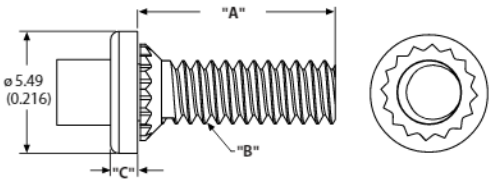

ORDERING INFORMATION

example 12 digit part **501303B000 __ G**
Ordering code

example Thermalloy origin part **7022B– __ G**
A B C

A = Model number
B = Stud suffix
C = RoHS compliant

Suffix	Ordering code	Dia of PCB thru hole	"A" Dim	"B" Dim	"C" Dim	Figure
SE-1	08	3.68 (0.145)	8.89 (0.350)	6-32	1.13-1.26 (0.045-0.050)	A
SE-2	06	3.68 (0.145)	12.32 (0.485)	6-32	1.14-1.27 (0.045-0.050)	A
SE-3	09	3.68 (0.145)	8.89 (0.350)	4-40	1.14-1.26 (0.045-0.050)	A
SE-4	14	3.68 (0.145)	8.89 (0.350)	6-32	3.05 (0.120)	B
SM-1	17	3.68 (0.145)	8.89 (0.350)	M3 x 0.5	3.05 (0.120)	B
SM-3	07	3.68 (0.145)	8.89 (0.350)	M3 x 0.5	1.13-1.26 (0.045-0.050)	A

Note: Factory installed only

Typical installation

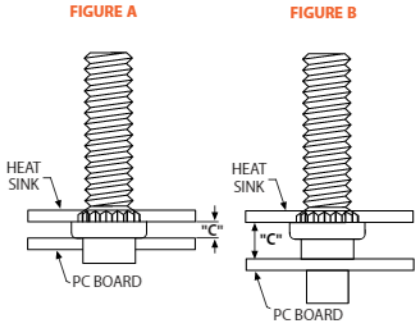

Device Mounting Studs

Device mounting studs for "Thermalloy-origin" items are available as options on certain vertical and board mount heat sinks as a labor-saving aid for mounting semiconductors. This optional feature speeds production assembly time and reduces hardware requirements.

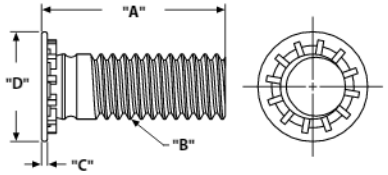

ORDERING INFORMATION

example 12 digit part **529801B000 __ G**
Ordering code

example Thermalloy origin part **7019B– __ G**
A B C

A = Model number
B = Stud suffix
C = RoHS compliant

Suffix	Ordering code	"A" Dim	"B" Dim	"C" Dim	"D" Dim
SF1	11	7.92 (0.312)	4-40 UNC-2A	0.25 (0.010)	4.75 (0.187)
SF2	N/A	8.00 (0.315)	M3 x 0.5	0.25 (0.010)	4.60 (0.181)
SF3	N/A	7.92 (0.312)	6-32 UNC-2A	0.25 (0.010)	5.23 (0.206)

Note: Factory installed only

Mechanical drawing showing heat sink with device mounting studs

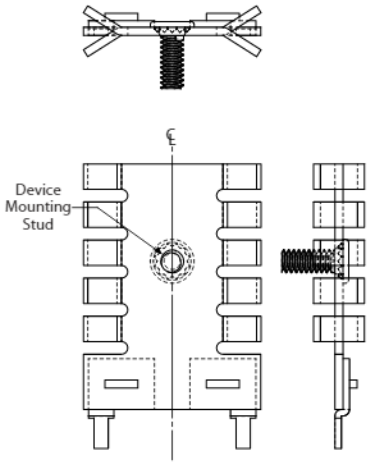

AAVID THERMALLOY
www.aavidthermalloy.com
AMERICA USA Tel: +1 (603) 224-9988 email: info@aavid.com
EUROPE Italy Tel: +39 051 764011 email: sales.it@aavid.com
United Kingdom Tel: +44 1793 401400 email: sales.uk@aavid.com
ASIA Singapore Tel: +65 6362 8388 email: sales@aavid.com.sg
Taiwan Tel: +886 (2) 2698-9888 email: sales@aavid.com.tw

Aavid Kool-Klips™

These one piece stainless steel clips eliminate the need for screws, lock washers and nuts in the assembly process, therefore reducing assembly time and cost. These can be bought separately, or found in the 11th or 12th position when deciphering an Aavid Standard product. Please reference Indexes to see which clips are popular with which product offering.

ORDERING INFORMATION

To order clips seperately use part number below.
To order a clip as an option use ordering code.

example 12 digit part **530101B000 _ _ G**
Ordering code

Part number	Transistor case style	Ordering code
115000F00000G	TO-220, TO-218	50
115100F00000G	TO-220, TO-218	51
115200F00000G	TO-220, TO-218	52
115300F00000G	TO-220, TO-218	53
115400F00000G	TO-220	54
116200F00000G	TO-220, TO-218	62
5901G	TO-220, TO-218, TO-247	Sold separately only
6801G	TO-220, TO-218, TO-247	Sold separately only
7701G	TO-220	Sold separately only

6801G

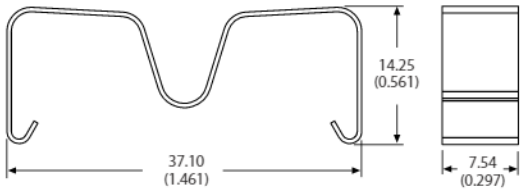

5901G

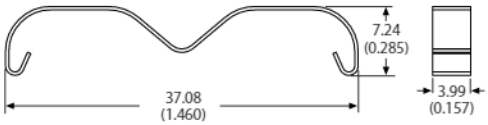

7701G

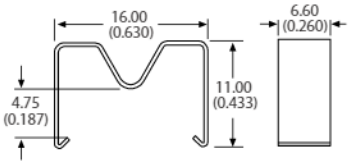

115000F00000G Code 50

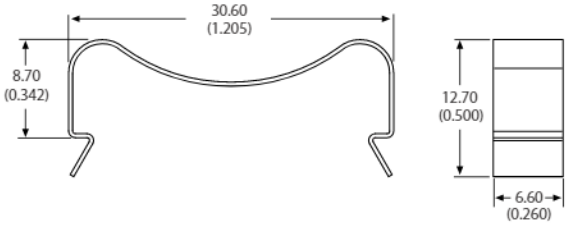

115100F00000G Code 51

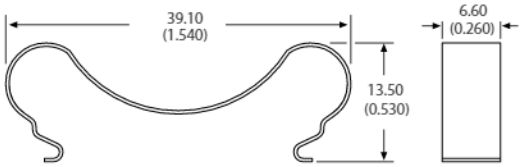

115200F00000G Code 52

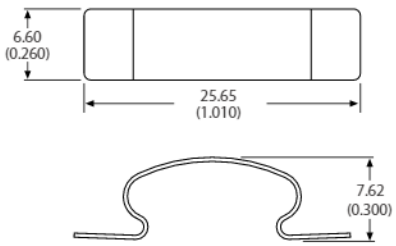

115300F00000G Code 53

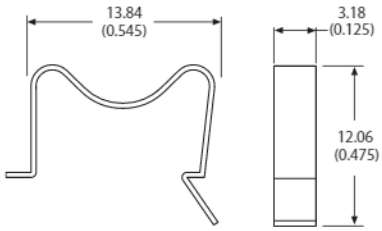

115400F00000G Code 54

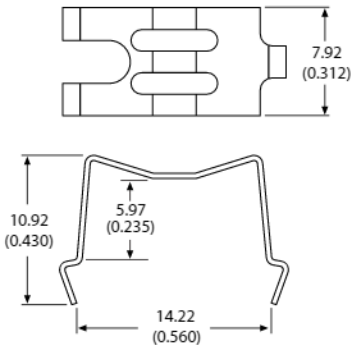

116200F00000G Code 62

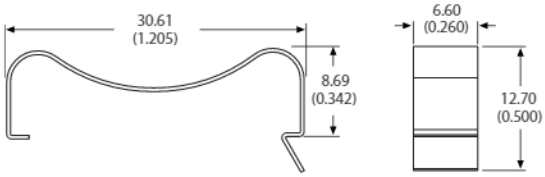

Thermal Clips

Factory-Installed ONLY thermal clips, available on many standard heat sinks (shown below) eliminate the use of screws and nuts in assembling the heat sink and transistor. Plastic case transistors slip into place for easy assembly. Thermal clips are available in a variety of configurations. Locking clips have an internal tab to lock the transistor permanently in place.

ORDERING INFORMATION

example 12 digit part **530600B000 __ G**

Ordering code

example Thermalloy origin part **7023B– ___ G**

A B C

A = Model number
B = Clip suffix
C = RoHS compliant

Suffix	Ordering code	Transistor case style	Clip/Cover features
TC1	32	TO-220	Locking
TC6	36	TO-218, TO-220, Multiwatt	Locking
TC7	N/A	TO-218, TO-220, Multiwatt	Insulated
TC10	33	TO-220, TO-218	Locking
TC11	34	TO-220	Insulated
TC12	35	TO-218, TO-220	Locking

TC-1 Code 32

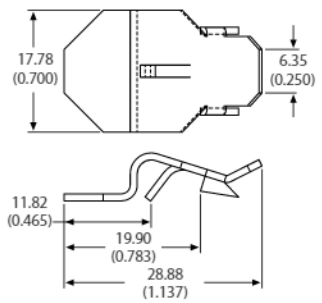

TC-6 Code 36

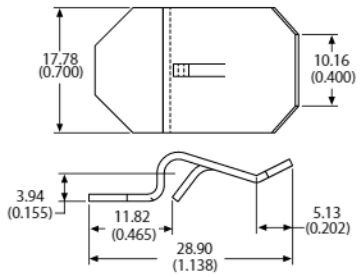

TC-7 Code N/A

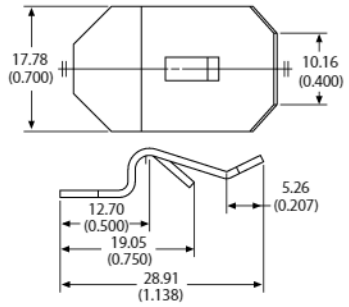

TC-10 Code 33

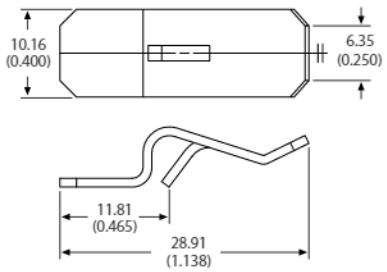

TC-11 Code 34

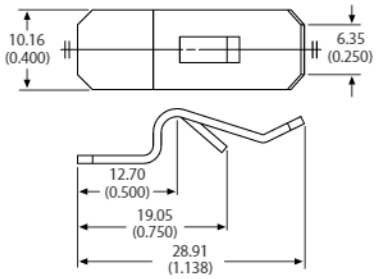

TC-12 Code 35

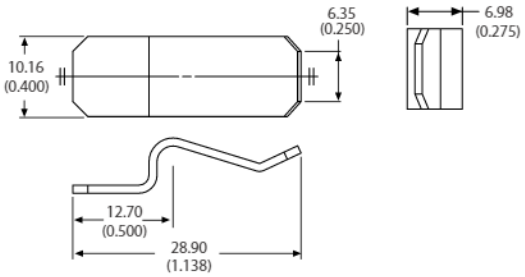

AAVID THERMALLOY
www.aavidthermalloy.com

AMERICA
USA Tel: +1 (603) 224-9988 email: info@aavid.com

EUROPE
Italy Tel: +39 051 764011 email: sales.it@aavid.com
United Kingdom Tel: +44 1793 401400 email: sales.uk@aavid.com

ASIA
Singapore Tel: +65 6362 8388 email: sales@aavid.com.sg
Taiwan Tel: +886 (2) 2698-9888 email: sales@aavid.com.tw

Mounting Kits

FEATURES

- Pre-packaged in heat-sealed plastic bags for use on assembly line.
- Stock mounting hardware using one number for better control and identification.
- Three different insulating materials available:
  Low cost Thermalfilm™
  High temperature Mica
  High performance Thermalsil™ III
- Other insulator materials available for special order include: hard anodized aluminum and aluminum oxide.
- Individually packaged for convenient stocking and handling of mounting hardware. Kits contain all hardware necessary to electrically isolate the transistor from the heat sink.

TO-220 Mounting kit part number 4880

ORDERING INFORMATION

Part number	Description
4880G	Kit with Thermalfilm™
4880MG	Kit with Mica Insulator
4880SG	Kit with Thermalsil™ III

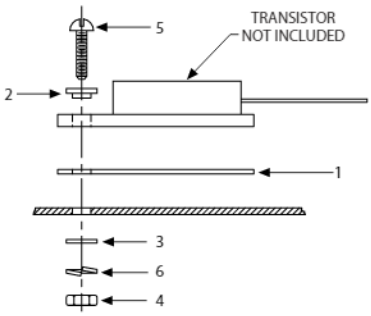

EACH KIT INCLUDES:

Part number	Item	Qty	Description
	1	1	Insulator
43-77-9			Thermalfilm™ (see page 101)
(56-77-9)			Mica (see page 103)
(53-77-9)			Thermalsil™ III (see page 103)
7721-7PPS	2	1	Shoulder washer
MS15795-804	3	1	Flat washer #4 No. 4-40 UNC-2B
MS35649-244	4	1	Hex nut No. 4-40 UNC-2A X
MS51957-17	5	1	1/2 Long phillips pan head screw
MS35338-135	6	1	Lock washer, No. 4

Note: Smooth side of flat washer should be placed against insulator when using the kit.

TO-3 Mounting kit part number 4804

ORDERING INFORMATION

Part number	Description
4804G	Kit with Thermalfilm™
4804MG	Kit with Mica Insulator
4804SG	Kit with Thermalsil™ III

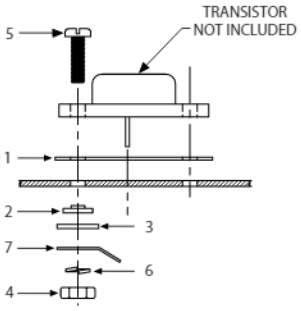

EACH KIT INCLUDES:

Part number	Item	Qty	Description
	1	1	Insulator
43-03-2			Thermalfilm™ (see page 101)
(56-03-2)			Mica (see page 103)
(53-03-2)			Thermalsil™ III (see page 103)
7721-5PPS	2	2	Shoulder washer
MS15795-805	3	2	Flat washer #6
MS35649-264	4	2	No. 6-32 UNC-2B Hex nut
MS 51957-30	5	2	No. 6-32 UNC-2A X 1/2 Long phillips pan head screw
MS35338-136	6	2	Lock washer, No. 6
322-156	7	1	Solder lug

Note: Smooth side of flat washer should be placed against insulator when using the kit.

Insulating Shoulder Washers

FEATURES

- Available in nylon or polyphenylene sulfide
- Chemically inert [no known solvents under 200°C (392°F)]
- Maximum recommended service temperature of 260°C (500°F)
- Recommended torque is 0.565Nm to 0.678Nm (5 to 6 inch-pounds) on all shoulder washers except –7, which has recommended torque of 0.452Nm (4 inch-pounds)

Polyphenylene Sulfide PPS Shoulder Washers

FIGURE A

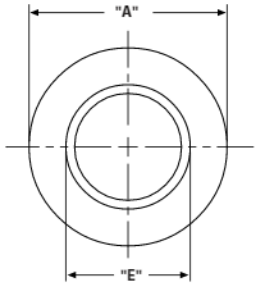

FIGURE B

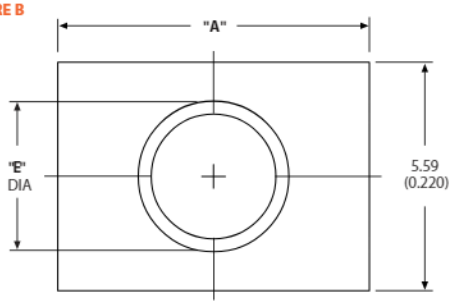

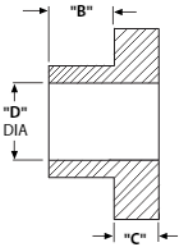

Note: This figure is common to figures A and B

Part number	"A" Dim	"B" Dim	"C" Dim	"D" Dim	"E" Dim	Screw size	Figure
7721-1PPSG	7.11 (0.280)	3.18 (0.125)	1.07 (0.042)	2.84 (0.112)	3.81 (0.150)	4	A
7721-2PPSG	7.11 (0.280)	4.70 (0.185)	1.07 (0.042)	2.84 (0.112)	3.81 (0.150)	4	A
7721-3PPSG	7.11 (0.280)	3.18 (0.125)	1.07 (0.042)	2.84 (0.112)	3.56 (0.140)	4	A
7721-5PPSG	7.92 (0.312)	0.79 (0.031)	1.19 (0.047)	3.66 (0.144)	4.50 (0.177)	6	A
7721-6PPSG	7.11 (0.280)	0.79 (0.031)	1.19 (0.047)	3.00 (0.118)	3.68 (0.145)	4	A
7721-7PPSG*	5.46 (0.215)	0.81 (0.032)	1.02 (0.040)	2.95 (0.116)	3.43 (0.135)	4	A
7721-10PPSG	7.62 (0.300)	2.41 (0.095)	1.40 (0.055)	2.97 (0.117)	3.56 (0.140)	4**	B

Note: A single gate extension, not to exceed 0.64 (0.025) in length, is allowable on the outside of all shoulder washers.

* Design allows insertion in the tab of a TO-220.
** Also for M3 screw.

Nylon Shoulder Washers

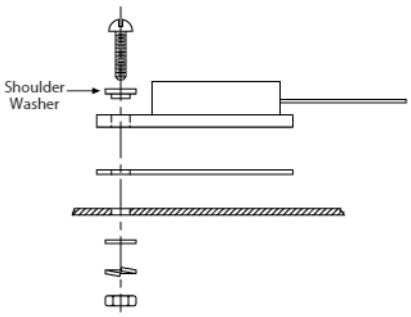

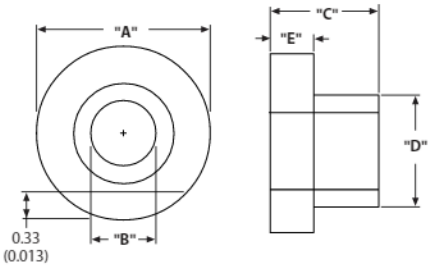

Material is nylon type 6

Part number	"A" Dim	"B" Dim	"C" Dim	"D" Dim	"E" Dim
7721-11NG	7.80/8.05 (0.307/0.317)	2.87/3.00 (0.113/0.118)	3.56/3.81 (0.140/0.150)	3.76/3.89 (0.148/0.153)	1.09/1.35 (0.043/0.053)
7721-13NG	5.89/6.05 (0.232/0.238)	2.87/3.00 (0.113/0.118)	N/A	3.43/3.56 (0.135/0.140)	1.19/1.40 (0.047/0.055)
7721-15NG	5.59/6.10 (0.220/0.240)	2.90/2.95 (0.114/0.116)	1.73/1.91 (0.068/0.075)	3.43/3.58 (0.135/0.140)	0.51/0.64 (0.020/0.025)

AAVID THERMALLOY
www.aavidthermalloy.com
AMERICA USA Tel: +1 (603) 224-9988 email: info@aavid.com
EUROPE Italy Tel: +39 051 764011 email: sales.it@aavid.com
United Kingdom Tel: +44 1793 401400 email: sales.uk@aavid.com
ASIA Singapore Tel: +65 6362 8388 email: sales@aavid.com.sg
Taiwan Tel: +886 (2) 2698-9888 email: sales@aavid.com.tw

Thermalfilm™ Polyimide Plastic Films

Thermalfilm™ and Thermalfilm™ MT are low cost polymide plastic insulating films designed to be an improved replacement for mica. These insulators have a distinctive amber color and can be easily recognized and assembled on a production line.

Thermalfilm™ MT, made from high performance Kapton™ MT material, provides thermal conductivity nearly 2-5 times greater than standard Thermalfilm™. Both insulators have an extremely high resistance to flow or thin out under high compressive stresses, particularly at elevated temperatures. Excellent physical, mechanical and electrical properties remain nearly constant over a wide range of temperatures and frequencies. They are radiation resistant, have no melting points, and have no known organic solvents. The polymide plastic film is UL listed as a component in UL's publication "Component – Plastic Material" dated September 18, 1969. The UL card number is E39505R, Guide QMFZ2 filed by E. I. du Pont de Nemours & Co., Inc. Thermalfilm™ is rated 94-V/0.

ORDERING INFORMATION

For standard pre-cut sizes of Thermalfilm™ and Thermafilm™ MT see page 102.

ELECTRICAL – TYPICAL VALUE @ 25° C

PROPERTY	THERMALFILM™	THERMALFILM™ MT	TEST METHOD
Dielectric strength	0.03mm (1-mil)	177.2 x 10^3 volts/mm	ASTM D149-64
	240 x 10^3 volts/mm	(4500 volts/mm)	
	(6,100 volts/mil)		
Dielectric constant	3.5	4.3	ASTM D150-64T
Dissipation factor	0.002	0.002	ASTM D150-64T
Volume resistivity	10^{17} ohm-cm	10^{17} ohm-cm	ASTM D257-61
Surface resistivity	10^{16} ohms	10^{16} ohms	ASTM D257-61
Corona start voltage 0.025mm (1-mil)	465 volts	465 volts	ASTM D1868-61T
Insulation resistance	100.000 megohm mfds.	100.000 megohm mfds.	Based on 0.05 mfd wound
			capacitor using 0.25 mm
			(1-mil) Film
		PHYSICAL	
Material thickness	0.05mm (0.002")	0.05mm (0.002")	
Ultimate tensile strength (MD)	1.72 x 10^8 Pa (25,000 psi)	103 MPa (1500 psi)	ASTM D882-64T
Bursting strength test (Mullen)	3.10 x 10^5 Pa (45 psi)	0.31 MPa (45 psi)	ASTM 0774-63
Tear strength – initial	27,559 gm/mm (700 gm/mil)	35,433 gm/mm (900 gm/mil)	ASTM D1004-61
Density	1.42 gm/cm^3 (88.7 lb/ft^3)	1.78 gm/cm^3 (111.1 lb/ft^3)	ASTM D1505-63T
Folding endurance (MIT)	>10,000 cycles	>10,000 cycles	ASTM D2176-63T
		THERMAL	
Melting point	NONE	NONE	
Zero strength temperature	815°C (1499°F)	815°C (1499°F)	Hot Bar (Du Pont test)
Cut through temperature	435°C (815°F)	435°C (815°F)	Weighted probe on heated film
	525°C (977°F)	525°C (977°F)	(Du Pont test)
Service temperature	-260°C to 240°C	-260°C to 240°C	
	(-436°F to 464°F)	(-436°F to 464°F)	
Thermal conductivity	0.156W/m °C	0.379 W/m °C	Model TC-1000 twin heatmeter
	(0.09 BTU/hr-ft-°F)	(0.219 BTU/hr-ft-°F)	Comparative tester
Flammability	V-0, UL "E" card E39505	V-0, UL "E" card E39505	UL 94

Notes: One mil equals 0.001 inch

Dimensional tolerances are ± 0.38mm (0.015"), hole diameters are ± 0.25mm (0.010") and angularity is ± 1 1/2° unless otherwise specified.

Thermalfilm™ for TO-3

ORDERING INFORMATION

Part number	"A" Dim	"B" Dim	"C" Dim	"D" Dim
43-03-2G	42.04 (1.655)	27.00 (1.063)	3.96 (0.156)	1.57 (0.062)
43-03-4G	39.70 (1.563)	26.67 (1.050)	3.56 (0.140)	1.57 (0.062)

Thermalfilm™ information on page 101
Dimensional tolerances are ± 0.38mm (0.015), hole diameters are ± 0.25mm (0.010) and angularity is ± 1 1/2° unless otherwise specified.

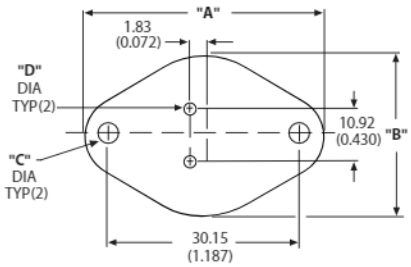

Thermalfilm™ for TO-5 and TO-18

ORDERING INFORMATION

Part number	Device	Figure	"A" Dim	"B" Dim	"C" Dim
43-05-1G	TO-5	A	9.91 (0.390)	5.08 (0.200)	0.91 (0.036)
43-05-2G	TO-5	B	9.91 (0.390)	5.08 (0.200)	0.91 (0.036)
43-18-1G	TO-18	A	6.35 (0.250)	2.54 (0.100)	0.91 (0.036)

Thermalfilm™ information on page 101
Dimensional tolerances are ± 0.38mm (0.015), hole diameters are ± 0.25mm (0.010) and angularity is ± 1 1/2° unless otherwise specified.

FIGURE A

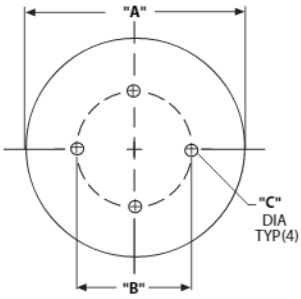

FIGURE B

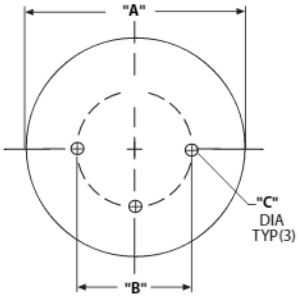

Thermalfilm™ for TO-220, TO-126, Case 77, Case 199, Case 90, TO-218 and TO-3P

ORDERING INFORMATION

Part number	Device	"A" Dim	"B" Dim	"C" Dim	"D" Dim
43-77-1G	TO-126, Case 77	11.10 (0.437)	7.92 (0.312)	3.56 (0.140)	2.36 (0.093)
43-77-2G	Case 90, Case 199	17.45 (0.687)	14.27 (0.562)	5.54 (0.218)	3.18 (0.125)
43-77-8G	Case 90, Case 199	18.92 (0.745)	13.84 (0.545)	5.38 (0.212)	3.81 (0.150)
43-77-9G	TO-220	18.42 (0.725)	13.21 (0.520)	4.32 (0.170)	2.92 (0.115)
46-77-9G*	TO-220	18.42 (0.725)	13.21 (0.520)	4.32 (0.170)	2.92 (0.115)
43-77-20G	TO-220, TO-218, TO-3P	23.24 (0.915)	18.80 (0.740)	6.98 (0.275)	3.66 (0.144)

* Thermalfilm™ MT part numbers begin with "46"

Thermalfilm™ information on page 101
Dimensional tolerances are ± 0.38mm (0.015), hole diameters are ± 0.25mm (0.010) and angularity is ± 1 1/2° unless otherwise specified.

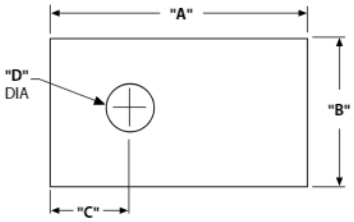

AAVID THERMALLOY
www.aavidthermalloy.com
AMERICA USA Tel: +1 (603) 224-9988 email: info@aavid.com
EUROPE Italy Tel: +39 051 764011 email: sales.it@aavid.com
United Kingdom Tel: +44 1793 401400 email: sales.uk@aavid.com
ASIA Singapore Tel: +65 6362 8388 email: sales@aavid.com.sg
Taiwan Tel: +886(2) 2698-9888 email: sales@aavid.com.tw

Mica and Thermalsil™ III

Thermalsil™ III provides excellent thermal conductivity and electrical resistance. It is used as an electrically-isolating interface material composed of silicone elastomer binder with a thermally conductive filler. It is reinforced with glass cloth to resist tearing and cut-through due to burrs on transistors or heat sinks.

Thermalsil™ III eliminates the need for grease application and conforms to mounting surfaces under clamping pressure for optimum heat conduction. The finely woven glass cloth provides the thinnest possible matrix for enhanced thermal resistance. Thermalsil™ III is available in any configuration with adhesive backing.

Mica insulators provide high maximum operating temperatures (550°C) and excellent electrical properties.

FIGURE A

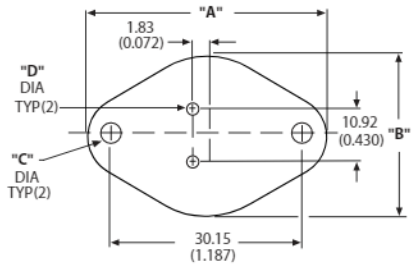

FIGURE B

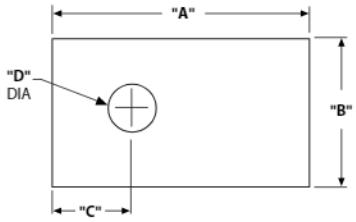

ORDERING INFORMATION

Part number	Description	Device	"A" Dim	"B" Dim	"C" Dim	"D" Dim	Figure
56-77-9G	Mica	TO-220	18.42 (0.725)	13.21 (0.520)	4.32 (0.170)	2.92 (0.115)	B
56-03-2G	Mica	TO-3	42.04 (1.655)	27.00 (1.063)	3.96 (0.156)	1.57 (0.062)	A
53-77-9G	Thermalsil™ III	TO-220	18.42 (0.725)	13.21 (0.520)	4.32 (0.170)	2.92 (0.115)	B
53-03-2G	Thermalsil™ III	TO-3	42.04 (1.655)	27.00 (1.063)	3.96 (0.156)	1.57 (0.062)	A

TYPICAL PROPERTIES FOR MICA INSULATORS

Property	
	Electrical
Dielectric strength **0.025 mm to 0.076 mm thick in air (1 to 3 mils thick in air)**	172 X 10^3 volts/mm (4500 volts/mil)
Dielectric constant	6.5 to 8.7
Dissipation factor	0.0001-0.0004 @ 10^6 Hz
Volume resistivity	10^{15} ohm-cm
	Physical
Modules of elasticity in tension	172 X 10^3 Mpa (25 X 10^6) psi
Tensile strength	310 Mpa (45,000 psi)
Hardness mohs, shore	3.0, 115
Compressive strength	2.21 X 10^8 Pa (32,000 psi)
Specific gravity	2.9
	Thermal
Thermal conductivity	0.528 W/(m °C) (0.30 Btu/hr-ft °F)
Coefficient of thermal expansion	3.24 X 10^{-5}°C (1.8 X 10^{-5} °F)
Specific heat	0.084 KJ/Kg °C (0.02 Btu/Lb °F)
Melting point	1275°C (2327 °F)
Max. operating temperature	550 °C (1022 °F)

TYPICAL PROPERTIES FOR THERMALSIL™ III

Property	Typical value 25°C	Test method
	Electrical	
Dielectric constant	2.5@50 Hz 2.5@10^3 Hz 2.5@10^6 Hz	ASTM D-150
Dielectric breakdown voltage	26.3 x 10^3 volts/mm (667 volts/mil)	ASTM D-149
Volume resistivity	5.7 x 10^{15} ohm-cm	ASTM D-257
Dielectric dissipation factor	0.008@50 Hz 0.004 @10^3 Hz 0.004 @10^6 Hz	ASTM D-150
	Physical	
Thickness	0.15mm (0.006 inch)	
Color	Gray-Green	
Tensile strength	6.1 x 10^7 Pa (8786 psi)	
Hardness, shore A	87	
Elongation	2% or less	
	Thermal	
Thermal conductivity	0.92 W/(m °C) (0.532 Btu/hr. ft °F)	
Flame resistance	UL 94V-0	UL card #E-58126 (S)
Service temperature	-60°C to 180°C (-76°F to 356°F)	

Aluminum Oxide

Aluminum oxide has unique thermal conductivity qualities and features low loss factors at high frequencies. It has high compressive strength, high volume resistivity, low thermal expansion and resists radiation.

Aluminum oxide insulating washers have a dielectric strength of approximately 21.7 x 10^3 volts/mm for .76mm material (550 volts/mil for 0.030 inch material) and 16.9 x 10^3 volts/mm for 1.57mm material (430 volts/mil for 0.062 inch material). The thermal conductivity of aluminum oxide is 15.06W/(m°C) at 75°C.

PROPERTY	CHEMICAL – TYPICAL VALUE	TEST METHOD
$A1_2 0_3$	94% nominal	Spectrographic analysis (100%-% by wt. of total metallic impurity)
Dielectric constant 25,°C (77°F)	**ELECTRICAL**	
	8.9 (1MHz)	ASTM D150-70
	8.9 (10GHz)	ASTM D2520-70
Dissipation factor 25°C (77°F)	0.0001 (MHz)	ASTM D150-70
	0.0010 (10GHz)	ASTM D2520-70
Electrical resistivity 25°C (77°F)	>10^{14} ohm-cm	ASTM D1829-66
Dielectric strength (AC)	8.66 x 10^3 volts/mm (6.35mm thick)	ASTM D116-69
	[220 volts/mil (0.250" thick)]	
	16.73 x 10^3 volts/mm (1.27mm thick)	
	[425 volts/mil (0.050" thick)]	
	28.35 x 10^3 volts/mm (0.25mm thick)	
	[720 volts/mil (0.010" thick)]	
	PHYSICAL	
Density	3.62 g/cm³ (226 lb/ft³)	ASTM C20-70
Hardness	78 (Rockwell 45 N)	ASTM E18-67
	MECHANICAL	
Flexural strength 25°C (77°F)	3.17 x 10^8 Pa (minimum) [46.00 psi (minimum)]	ACMA Test #2
	3.52 x 10^8 Pa (typical) [51,000 psi (typical)]	
Modules of elasticity	2.83 x 10^{11} Pa (41 x 10^6 psi)	ASTM C623-69T
Poisson's ratio	0.21	ASTM C623-69T
Tensile strength 25°C (77°F)	1.93 x 10^8 Pa (28,000 psi)	ACMA Test #4
Compressive strength 25°C (77°F)	2.10 x 10^9 Pa (305,000 psi)	ASTM C528-63T
	THERMAL	
Coefficient of thermal expansion	7.9 x 10^6/°C (4.4 x 10^6/°F)	ASTM C372-56
Thermal conductivity	18.01 W/(m°C) @ 25°C	ASTM C408-58
	14.24 W/(m°C) @ 100°C	
	79.56 W/(m°C) @ 400°C	
Specific heat (100°C)	8.79 x 10^4 KJ/kg°C [2.1 x 10^4 Btu/lb °F]	ASTM C351-61
Melting point	>3600°C (6512°F)	
Maximum temperature for continuous use	1700°C (3100°F)	

Aluminum Oxide for TO-3

ORDERING INFORMATION

Part number	Thickness	"A" Dim	"B" Dim	"C" Dim	"D" Dim	"E" Dim
4103G*	1.91 (0.075)	39.70 (1.563)	26.67 (1.050)	13.34 (0.525)	4.75 (0.187)	30.40 (1.197)
4104G*	1.78 (0.070)	44.45 (1.750)	31.75 (1.250)	15.88 (0.625)	7.16 (0.282)	30.15 (1.187)

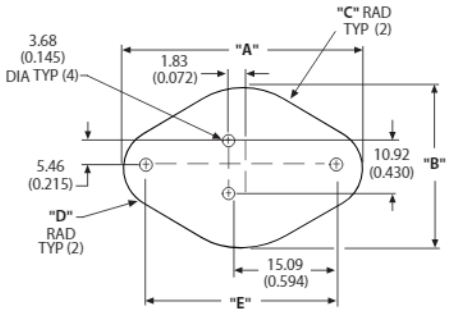

Aluminum Oxide Ceramic for TO-220

ORDERING INFORMATION

Part number	Thickness	"A" Dim	"B" Dim	"C" Dim	"D" Dim	"E" Dim
4169G*	1.57 (0.062)	19.30 (0.760)	13.97 (0.550)	4.78 (0.188)	6.98 (0.275)	3.68 (0.145)
4170G**	1.78 (0.070)	19.30 (0.760)	13.97 (0.550)	4.78 (0.188)	6.98 (0.275)	3.68 (0.145)
4171G**	1.78 (0.070)	16.51 (0.650)	12.70 (0.500)	4.32 (0.170)	6.35 (0.250)	3.81 (0.150)
4177G**	1.78 (0.070)	17.45 (0.687)	14.27 (0.562)	5.54 (0.218)	7.14 (0.281)	3.18 (0.125)

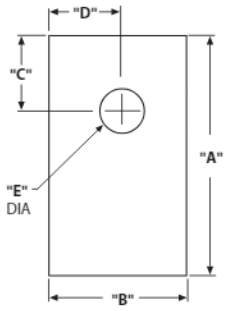

Aluminum Oxide Ceramic for TO-218, TO-247, and TO-3P

ORDERING INFORMATION

Part number	Thickness	"A" Dim	"B" Dim	"C" Dim	"D" Dim	"E" Dim
4180G*	1.78 (0.070)	23.24 (0.915)	18.80 (0.740)	6.98 (0.275)	9.40 (0.370)	3.96 (0.156)

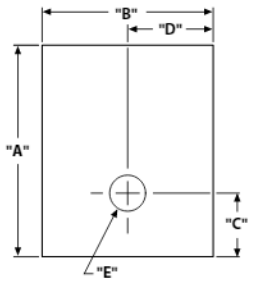

AAVID THERMALLOY
www.aavidthermalloy.com
AMERICA USA Tel: +1 (603) 224-9988 email: info@aavid.com
EUROPE Italy Tel: +39 051 764011 email: sales.it@aavid.com
United Kingdom Tel: +44 1793 401400 email: sales.uk@aavid.com
ASIA Singapore Tel: +65 6362 8388 email: sales@aavid.com.sg
Taiwan Tel: +886 (2) 2698-9888 email: sales@aavid.com.tw

8923-1, 8923-2, 8924 Stanchion Pads

FEATURES

- Reduces stress on leads during wave solder and post-soldering operations
- Provides stable mount to resist shock and vibration damage to leads
- 8923-1, 8923-2, and 8924 fit the TO-220

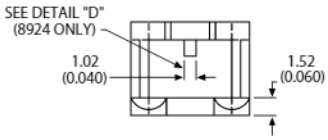

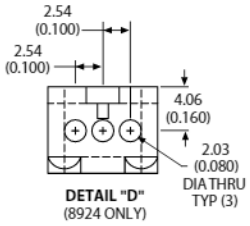

ORDERING INFORMATION

Part number	"A" Dim	"B" Dim	"C" Dim
8923-1G	2.54 (0.100)	20.32 (0.800)	8.00 (0.315)
8923-2G	1.27 (0.050)	19.05 (0.750)	8.00 (0.315)
8924G	1.27 (0.050)	19.05 (0.750)	7.87 (0.310)

Note: Tolerances ± 0.25 (0.010) unless otherwise specified.
Material is nylon 6/6 rated 94 V-O

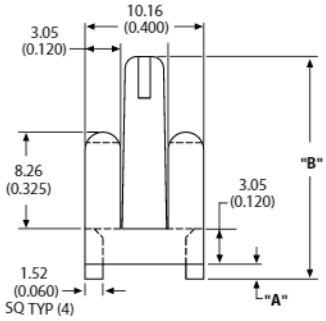

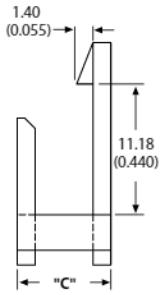

TO-3 Insulating Covers

Insulating covers are designed to provide protection from accidental shock during field service or repair.

Pan head screws not provided–MS 51957-30 or equivalent recommended–secure the cover to the TO-3. At the typical mounting screw torque of 0.68–0.90 Nm (6-8 inch pounds), the TO-3 cover material cold-flows around the screw head to securely fasten the cover.

Included are No.6 split washers as inserts to provide electrical connection of mounting screws to the TO-3 collector and an insulating snap-in cover for the screw heads. A test probe hole is provided in the top of the cover.

The 8903VB is made from thermoplastic polyester that meets the requirements of UL Bulletin 94 V-O. In addition to its excellent flammability rating, thermoplastic polyester offers resistance to most chemical environments, heat deflection temperature to 215.6°C (420°F) and UL continuous use temperature of 130°C (266°F).

ORDERING INFORMATION

Part number	Material	Color	Flammability standards
8903NWG	Nylon	White	Self-extinguishing UL 94 V-2
8903VBG	Thermoplastic polyester	Black	Self-extinguishing UL 94 V-0 UL 492 Type 1

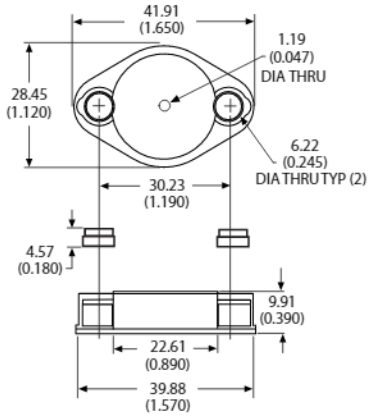

Teflon-filled Acetal Insulators for TO-3

Part number	Fits notch	"A" Dim
103G	4.83 (0.190)	4.90 (0.193)
109G	6.35 (0.250)	6.35 (0.250)

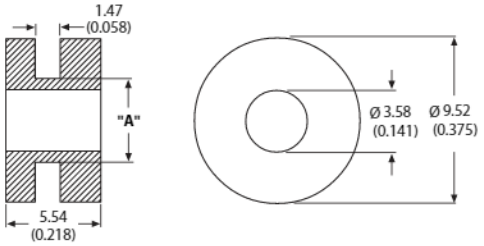

Teflon-filled Acetal Bushings for TO-3

Part number	"I.D."	"O.D."	"T"
110G	5.03/5.21(0.198/0.205)	6.81/6.98 (0.268/0.275)	1.57/1.40 (0.062/0.055)
113G	6.43/6.60 (0.253/0.260)	7.82/8.00 (0.308/0.315)	1.57/1.40 (0.062/0.055)

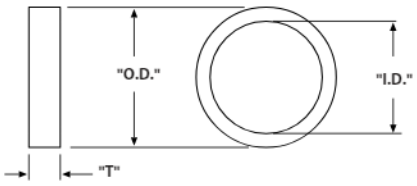

AAVID THERMALLOY
www.aavidthermalloy.com
AMERICA USA Tel: +1 (603) 224-9988 email: info@aavid.com
EUROPE Italy Tel: +39 051 764011 email: sales.it@aavid.com
United Kingdom Tel: +44 1793 401400 email: sales.uk@aavid.com
ASIA Singapore Tel: +65 6362 8388 email: sales@aavid.com.sg
Taiwan Tel: +886 (2) 2698-9888 email: sales@aavid.com.tw

FEATURES

- Prevent heat damage during soldering
- Facilitate board clean-up
- Prevent solder bridges
- Assure uniform device height

PRODUCT INFORMATION

Suffix	Base material	MAXIMUM OPERATING TEMPERATURE Continuous	Deflection	Color
NG	Nylon base resin per ASTM STD D4066-82-PA111	121.0°C 250°F	243.3°C 470°F	Natural
DAPG*	Diallyl Phthalate per MIL-M-14G type SDG	204.4°C 400°F	282.2°C 540°F	Black only

* All "DAP" mounting pads meet UL 94 V-0

Note: Please specify material for each mounting pad: "N" = nylon; "DAP" = Diallyl Phtalate.
Example: 7717-3NG, 7717-86DAPG

Index of Semiconductor Lead Conversion Pads

ORDERING INFORMATION

Part number	Converts lead spacing from	To	# of Leads	Outside dia	Thickness
			For epoxy transistors		
7717-130G	0.05 In-Line	TO-92 & TO-15	3	5.84 (0.230)	1.02 (0.040)
			For TO-18		
7717-247G	TO-18	TO-5	3	7.11 (0.280)	3.81 (0.170)
7717-26G	TO-18	TO-5	3	8.71 (0.343)	3.05 (0.120)
7717-44G	TO-18	TO-5	4	7.75 (0.305)	3.18 (0.125)

See pages 108 and 109 for mechanical drawings

Index of Semiconductor Mounting Pads

ORDERING INFORMATION

Part number	Leads	Outside dia	Thickness
		For TO-5	
7717-86G	3	8.71 (0.343)	1.91 (0.075)
7717-178G	3	8.89 (0.350)	0 .53 (0.021)
7717-79G	3	9.02 (0.355)	0.97 (0.038)
7717-3G	3–4	8.64 (0.340)	1.91 (0.075)
7717-15G	4	8.89 (0.350)	0.51 (0.020)
7717-5G	4	8.89 (0.350)	3.18 (0.125)
7717-4G	4	9.53 (0.375)	1.91 (0.075)
		For TO-18	
7717-16G	4	5.08 (0.200)	0.51 (0.020)
7717-18G	4	5.08 (0.200)	2.54 (0.100)
7717-108G	4	5.16 (0.203)	1.78 (0.070)
7717-89G	4	6.35 (0.250)	2.03 (0.080)
7717-7G	4	6.35 (0.250)	3.18 (0.125)
		For integrated circuits	
7717-122G	8	9.27 (0.365)	1.78 (0.070)
7717-8G	8	9.53 (0.375)	1.91 (0.075)
7717-156G	14	19.05 x 11.43 (0.750 x 0.450)	1.27 (0.050)
		Misc. mounting pads	
7717-175G	Crystal Can Relay	10.16/20.32 (0.400 x 0.800)	1.27 (0.050)

See pages 108 and 109 for mechanical drawings

7717-3G

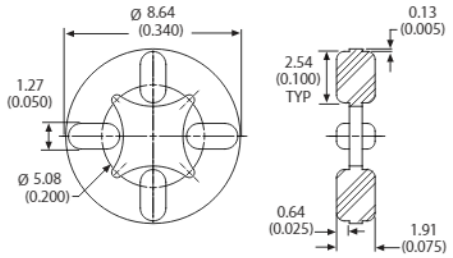

7717-4G

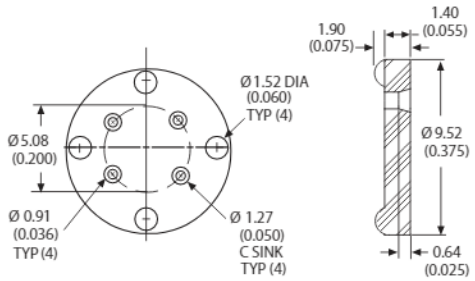

7717-5G

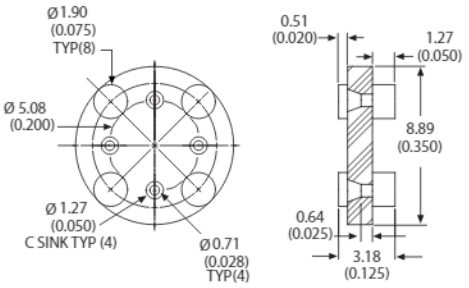

7717-7G

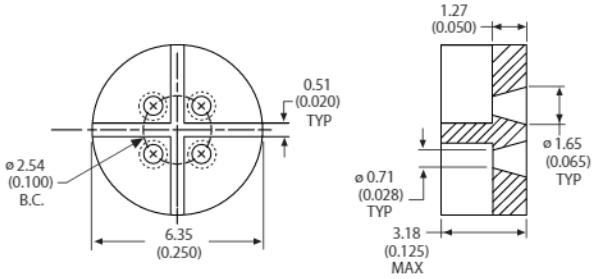

7717-8G

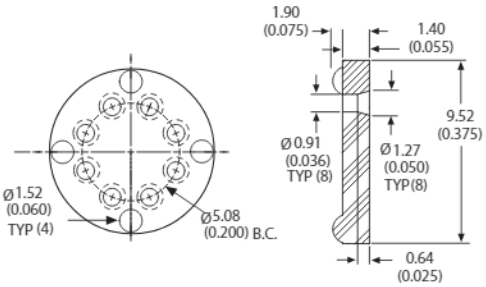

7717-15G

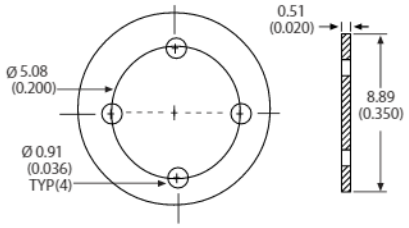

7717-16G

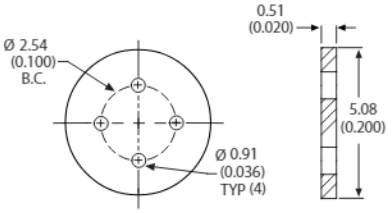

7717-18G

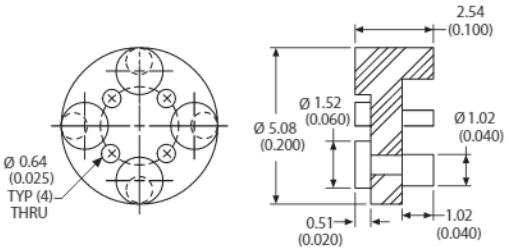

7717-26G Lead Conversion

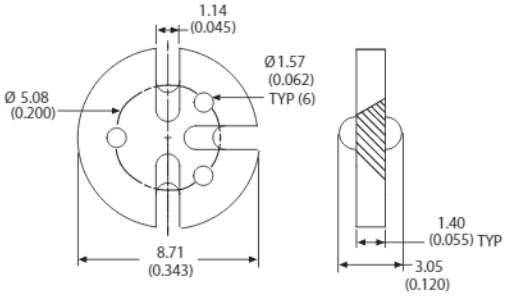

7717-44G Lead Conversion

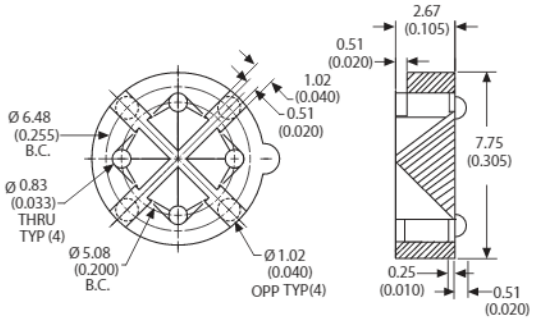

AAVID THERMALLOY
www.aavidthermalloy.com
AMERICA USA Tel: +1 (603) 224-9988 email: info@aavid.com
EUROPE Italy Tel: +39 051 764011 email: sales.it@aavid.com
United Kingdom Tel: +44 1793 401400 email: sales.uk@aavid.com
ASIA Singapore Tel: +65 6362 8388 email: sales@aavid.com.sg
Taiwan Tel: +886 (2) 2698-9888 email: sales@aavid.com.tw

7717-79G

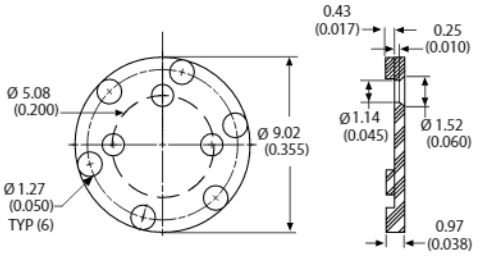

7717-86G

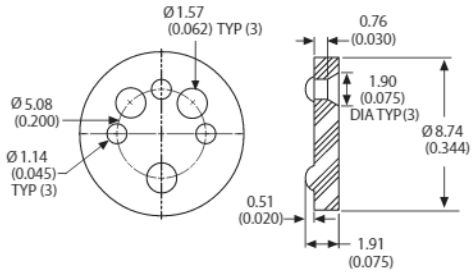

7717-89G

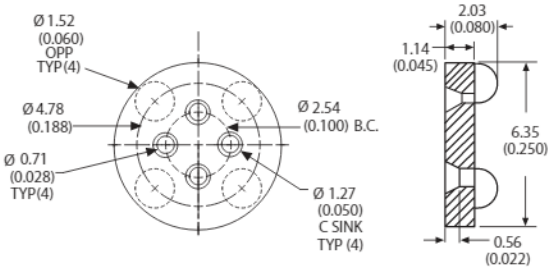

7717-108G

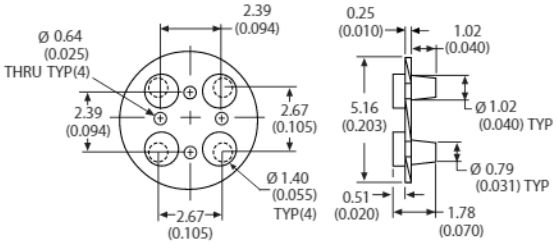

7717-122G

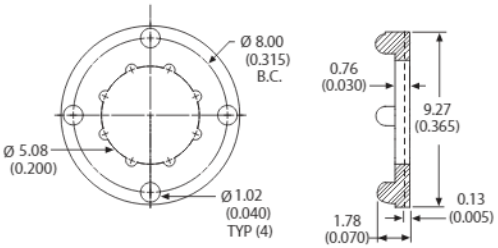

7717-130G Epoxy Transistors

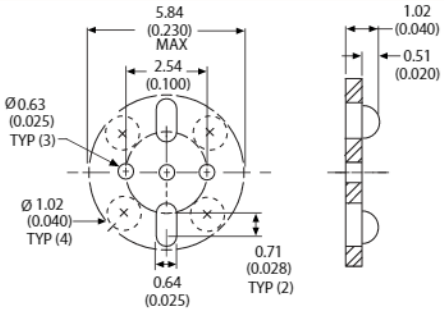

7717-156G

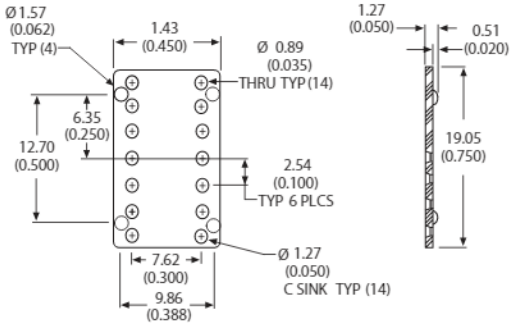

7717-175G

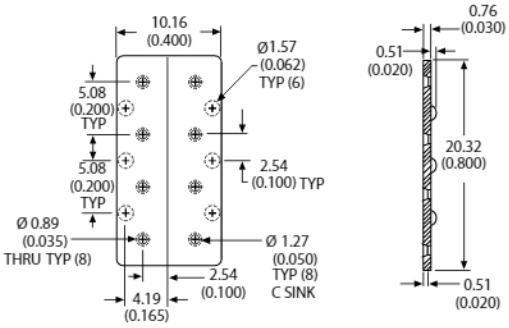

7717-178G

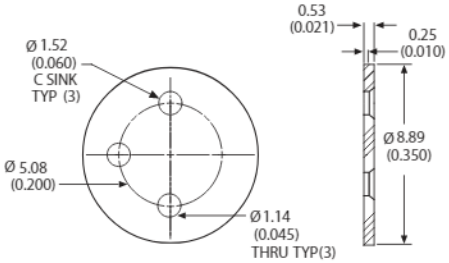

7717-247G Lead Conversion

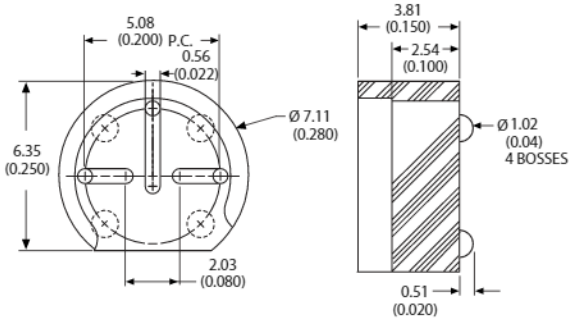

Finishes

Finish	Aavid Code	Thermalloy Suffix	Description
Black Anodize	B	B	Recommended for increased thermal performance. Anodize is electrically isolating and does not provide electrical insulation.
AavSHIELD[3]	V	V	For corrosion protection or painting only. Color variation may be expected with this finish. Chromate is electrically conductive. Does not provide electrical insulation.
Tin Plating	D	D	Allows heat sink to be soldered to the PC Board.
Pre-Black Anodized	J	PB	Edges cut during the manufacturing process will be unfinished.
Green Anodize	M		Alternative finish to Black anodize. Recommended for increased thermal performance. Electrically isolating but does not provide electrical insulation.
Unfinished	U	U	Clean, no finish.
Black Anodize w/Black Paint	W		Paint on mounting surface prevents metal from contacting the circuit thus avoiding shorts.

ORDERING INFORMATION

Aavid Thermalloy code – Finish option must be noted by one of the above letters in the 7th position. Aavid's standard finish is black anodize (B) unless otherwise noted.

example 12 digit part **530122B00000G**

A = Base part
B = Finish code
C = RoHS compliant

Thermalloy origin suffix – The suffixes should be added after the model number to indicate the desired finish.

example Thermalloy origin part **6396B G**

A = Model number
B = Finish suffix
C = RoHS compliant

Note : All thermal graphs reflect black anodize finish.

AAVID THERMALLOY
www.aavidthermalloy.com

AMERICA
USA Tel: +1 (603) 224-9988 email: info@aavid.com

EUROPE
Italy Tel: +39 051 764011 email: sales.it@aavid.com
United Kingdom Tel: +44 1793 401400 email: sales.uk@aavid.com

ASIA
Singapore Tel: +65 6362 8388 email: sales@aavid.com.sg
Taiwan Tel: +886 (2) 2698-9888 email: sales@aavid.com.tw

Snap-On Ejectors / Pullers

FEATURES

- Saves time – no roll pin required
- Excellent for retrofit applications
- Material is nylon per ASTM D4066-82PA162F11
- Cost no more than conventional ejector/puller
- Rated at 222.5N (50 lbs.) / ejector force per pair
- One piece – no assembly required
- May be heat stamped

ORDERING INFORMATION

Part number
5021NG

5021NG Ejector

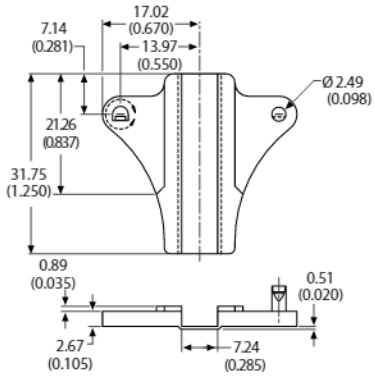

Standard Ejectors / Pullers

FEATURES

- Lever action releases card from its connector safely and quickly
- Cards, their components and connectors are less frequently damaged when extracting PC boards
- No special extraction tools are needed for board removal
- Material is nylon per ASTM D4066-82 PA120B4413F24, UL 94 V-O rated (natural color)
- Roll pins are provided (NAS 561-P3-4)

ORDERING INFORMATION

Part number	Figure
5005-09NG	A
5005-08NG	B
5005-25NG	C

FIGURE A 5005-09NG PULLER *

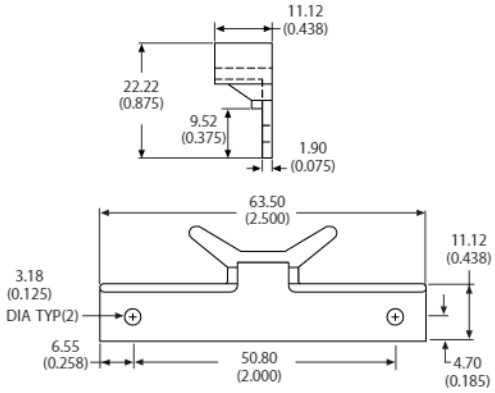

*No roll pins provided

FIGURE B 5005-08NG SLIM FACE/ FLAT

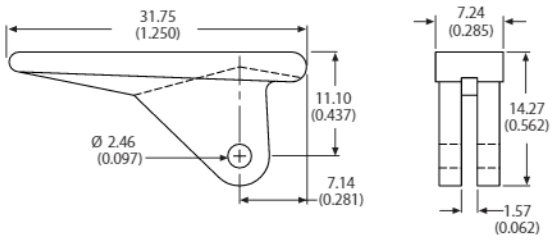

FIGURE C 5005-25NG COMBINATION EJECTOR/PULLER

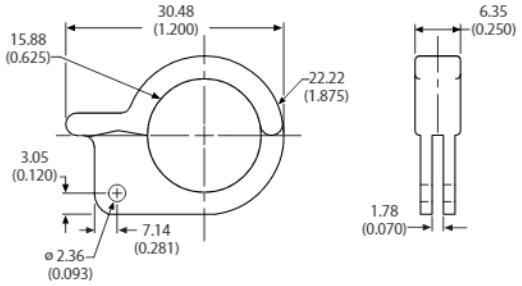

Sil-Free™

Sil-Free™ 1020 is a metal-oxide-filled, silicone-free synthetic grease specially formulated to enhance heat transfer across the interface between the semiconductor case and the heat sink without the migration or contamination associated with silicone-based products.

Dry interface case-to-sink thermal resistance is typically reduced 50% to 75% with proper application of Sil-Free™ 1020.

This virtually "no-bleed", high-performance compound will not dry out, harden, melt, or run, even after long-term continuous exposure to temperatures up to 200°C. Even in a vacuum atmosphere (10-5 Torr, 24 hours@100°C), Sil-Free™ 1020 exhibits virtually "no bleed" or evaporation.

ORDERING INFORMATION

Part number	Package	Size
101700F00000G	Syringe	43 grams (1.5 oz)
101800F00000G	Tube	57 grams (2.0 oz)
101900F00000G	Jar	57 grams (2.0 oz)
102000F00000G	Tube	143 grams (5.0 oz)
102100F00000G	Jar	457 grams (16.0 oz)

PRODUCT INFORMATION

Color	White
Thermal conductivity	0.79 W/(m-°C)
Operating temperature range	-40°C to +200°C
Volume	10^{12} Ohm-cm 2.3 ± 0.5
Weight	47.5 grams
Dielectric strength	225 volts/mil
Consistency	Paste
Bleed	0.09 max % after 24hr @ 200°C
Specific gravity	2.8 ± 0.2
Shelf life	Indefinite (unopened)*

* It is recommended that the containers be turned over every 6 months to minimize settling for ease of mixing

Ther-O-Link™

Ther-O-Link™ is a silicone-based thermal compound that cost effectively enhances the heat transfer between a semi-conductor case and a heat sink. Easy to apply, Ther-O-Link™ substantially reduces dry interface thermal resistance, while providing long life under a variety of conditions.

ORDERING INFORMATION

Part number	Package	Size
100000F00000G	Ampule	1 gram (0.03 oz)
100100F00000G	Syringe	35.7 grams (1.25 oz)
100200F00000G	Tube	57 grams (2.0 oz)
100500F00000G	Tube	143 grams (5.0 oz)
100800F00000G	Tube	228.6 grams (8.0 oz)
101600F00000G	Can	0.45 kg (1 lb)
108000F00000G	Can	2.27 kg (5 lb)
132000F00000G	Can	9.07 kg (20 lb)

PRODUCT INFORMATION

Color	White
Thermal conductivity	0.73 W/(m-°C)
Operating temperature range	-40°C to +200°C
Volume resistivity	1.0 x 10^{15} Ohm-cm
Dielectric strength	250 volts/mil
Consistency	Paste
Bleed	0.6 max
Specific gravity	2.8
Shelf life	Indefinite (unopened)*

* It is recommended that the containers be turned over every 6 months to minimize settling for ease of mixing

Ultrastick™

Aavid's Ultrastick™ is a unique phase-change thermal interface material that surpasses grease in thermal performance and long-term stability. This solid, silicone-free, paraffin-based thermal compound changes phase at 60°C, with a concurrent volumetric expansion that fills gaps between the mating surfaces. Ultrastick™ comes in a convenient applicator bar, allowing for neat, fast application to both heat sink and component surfaces. One cost-effective application leaves a thin, film-like deposit, providing excellent heat transfer and low interface thermal resistance.

ORDERING INFORMATION

Part number	Package	Size
100300F00000G	Bar	47.5 grams (0.16 oz)

PRODUCT INFORMATION

Temperature range	-40°C to +200°C
Volume resistivity	1.0 X 1.0^{15} Ohm-cm
Dielectric strength	250 volts/mil
Consistency	Paste
Bleed	0.6 max
Specific gravity	0.28
Color	Opaque White
Thermal resistance	0.03°C/W per square inch @ 20 psi 0.02°C/W per square inch @ 100 psi
Shelf life	Indefinite*

* Recommended max. storage temperature: 40°C (105°F)

AAVID THERMALLOY
www.aavidthermalloy.com

AMERICA
USA Tel: +1 (603) 224-9988 email: info@aavid.com

EUROPE
Italy Tel: +39 051 764011 email: sales.it@aavid.com
United Kingdom Tel: +44 1793 401400 email: sales.uk@aavid.com

ASIA
Singapore Tel: +65 6362 8388 email: sales@aavid.com.sg
Taiwan Tel: +886 (2) 2698-9888 email: sales@aavid.com.tw

Thermalcote™

Thermalcote™ is a superior thermal joint compound of thermally loaded silicone based grease for use with all heat sinks. It improves the transfer of thermal energy across the metal to metal interfaces between the transistor or rectifier case and the heat sink. Thermalcote™ conducts heat approximately 15 times better than air and more than 4 times better than unloaded silicone grease. It is non-toxic, extremely stable, and neither cakes or runs from -40° to 204°C (-40°F to 399°F).

PRODUCT INFORMATION

Color	Opaque white
Operating temperature range	-40°C to 204°C (-40°F to 399°F)
Thermal conductivity	0.765W/(m °C)(.226 Btu/hr ft °F)
Dielectric strength	11.8 x 10^3 volts/mm (300 volts/mil) 1.27 mm gap (0.050" gap)
Cleaning solvent	Mineral spirits or turpentine
Specific gravity	1.6
Evaporation 24 hours@200°C (392°F), wt%	1
Shelf life	Indefinite (unopened)*

* It is recommended that the containers be turned over every 6 months to minimize settling for ease of mixing

ORDERING INFORMATION

Part number	Net weight
249G	28 grams (1 oz) tube
250G	57 grams (2 oz) tube
251G	0.45 kg (1 lb) can
252G	2.27kg (5 lb) can
253G	4.54 kg(10 lb) can

Thermalcote™ II

Thermalcote™ II was developed as the sensible alternative to silicone-based thermal greases. Thermalcote™ II employs a highly conductive synthetic base fluid that enables the finished product to exhibit the same thermal characteristics as the silicone-based products.

Thermalcote™ II contains no silicone. The high lubricity of the base oil permits efficient application to both semiconductor case or heat sink, and it will effectively fill the microscopic air gaps on the metal-to-metal mating surfaces. It is non-toxic, extremely stable, and neither cakes or runs from -40° to 200°C (-40°F to 392°F).

PRODUCT INFORMATION

Color	Blue
Operating temperature range	-40°C to 200°C (-40°F to 392°F)
Thermal conductivity	0.699W/(M °C) (0.204 Btu/hr ft °F)
Dielectric strength	7.9 x 10^3volts/mm (200volts/mil) 1.27 mm gap (0.050" gap)
Cleaning solvent	Mineral spirits or turpentine
Specific gravity	2.93@60°F (15.6°C)
Evaporation, 24 hours@200°C (392°F), wt%	0.6 max
Shelf life	Indefinite (unopened)*

* It is recommended that the containers be turned over every 6 months to minimize settling for ease of mixing

ORDERING INFORMATION

Part number	Net weight
349G	28 grams (1 oz) tube
350G	57 grams (2 oz) jar
351G	0.45 kg (1 lb) can

Ther-O-Bond™ Adhesive

ORDERING INFORMATION

Part number	Description	Package/Kit	Size
159900F00000G	Ther-O-Bond™ 1500	Resin and hardener	0.946 liter (1 qt)
161000F00000G	Ther-O-Bond™ 1600	2-Part plastic kit	10gm (0.35 oz)
164000F00000G	Ther-O-Bond™ 1600	2-Part plastic kit	40gm (1.40 oz)
200000F00000G	Ther-O-Bond™ 2000	Adhesive syringe Activator bottle	25ml 13ml

Ther-O-Bond™ 1500

Ther-O-Bond™ 1500 is a versatile epoxy casting system developed for high performance, production potting and encapsulating applications where low shrinkage and rapid air evacuation are required. This formulation has a very low surface tension and a flowable viscosity, which affords excellent air release. Ther-O-Bond™ 1500 adhers to rigid plastics and laminates, metals and ceramics, has a low coefficient of thermal expansion and is readily machined and shaped with ordinary shop tools. The fully cured epoxy system is an excellent electrical insulator which provides good resistance to electrolysis, leakage and corrosion room water, weather, gases and chemical compounds.

HANDLING CHARACTERISTICS

Mix ratio by weight, resin to hardener:	100 to 15
Mixed viscosity @ 25°C, cps:	1000 - 1500
Work-life @ 25°C	45 Minutes
Gel time @ 25°C	3-6 Hours
Cure schedule @ 25°C	8 Hours
Cure schedule @ 65°C	1 Hour
Cure schedule @ 100°C	0.5 Hour

PHYSICAL PROPERTIES

Color	Black
Specific gravity	1.5
Operating temp, °C	-60 to 155
Heat distortion temp, °C	100
Hardness, shore D:	88
Thermal conductivity W/(m°C)	1.26
Compressive strength, psi	14,000
Dissipation factor,	0.01
Self extinguishing:	yes
C.T.E. (ppm/°C)	25
Tensile strength (@25°C)	9200 psi
Dielectric	800
Shelf life	18 months*

* Stated shelf life is from date of manufacture. To allow for inventory cycle, product shipped from Aavid will have less than 18 months remaining shelf life. Aavid guarantees a minimum of 3 months remaining shelf life. Please adjust order quantity so all product will be consumed within 3 months of date of shipment.

Ther-O-Bond™ 1600

For smaller applications, Ther-O-Bond™ 1600 produces a stable, durable, high-impact bond, with good heat transfer characteristics. It is a thixotropic (smooth paste) thermally conductive epoxy system used for staking thermistors, diodes, resistors, integrated circuits and other heat sensitive components to printed circuit boards. This two-part adhesive develops strong, durable, high impact bonds at room temperature, which improve heat transfer while maintaining electrical insulation. Ther-O-bond™ 1600 bonds readily to itself, to metals, silica, steatie, alumina, sapphire and other ceramics, glass, plastics and many other materials because its coefficient of thermal expansion provides a good match for those materials over a fairly wide temperature range.

HANDLING CHARACTERISTICS

Mix ratio by weight, resin to hardener:	100 to 5
Mixed viscosity @ 25°C, cps:	33,000
Work-life @ 25°C	45 Minutes
Gel time @ 25°C	3-6 Hours
Cure schedule @ 25°C	8 Hours
Cure schedule @ 65°C	1 Hour
Cure schedule @ 100°C	0.5 Hour

PHYSICAL PROPERTIES

Color	Blue
Specific gravity:	2.30
Operating temp, °C	-70 to 115
Hardness, shore D:	90
Izod impact, F1 Lbs/Inch of notch	0.49
Thermal conductivity W/(m-°C)	0.85
C.T.E. (ppm/°C)	25
Tensile strength (@25°C)	9200 psi
Tensile lap shear, psi	2900
Dielectric strength (volts/mil)	410
Dielectric constant (1 KHz @ 25°C)	5.9
Dissipation factor, KH@ 25°C	5.9
Shelf life	18 months*

Ther-O-Bond™ 2000

Ther-O-Bond™ 2000 acrylic adhesive cures rapidly at room temperature, while providing a repairable, thermally conductive bond.

PRODUCT INFORMATION

Color	White
Thermal conductivity W/(m-°C)	0.48
C.T.E. (ppm/°C)	25
Tensile strength (@25°C)	2360 psi
Dielectric strength (volts/mil)	220
Shelf life	18 months*

* Stated shelf life is from date of manufacture. To allow for inventory cycle, product shipped from Aavid will have less than 18 months remaining shelf life. Aavid guarantees a minimum of 3 months remaining shelf life. Please adjust order quantity so all product will be consumed within 3 months of date of shipment.

AAVID THERMALLOY
www.aavidthermalloy.com

AMERICA
USA Tel: +1 (603) 224-9988 email: info@aavid.com

EUROPE
Italy Tel: +39 051 764011 email: sales.it@aavid.com
United Kingdom Tel: +44 1793 401400 email: sales.uk@aavid.com

ASIA
Singapore Tel: +65 6362 8388 email: sales@aavid.com.sg
Taiwan Tel: +886 (2) 2698-9888 email: sales@aavid.com.tw

Thermalbond™

Thermalbond™ is a thermally conductive, high strength epoxy adhesive. It provides exceptional adhesion to copper, aluminum, steel, glass, ceramics, and most plastics. Thermalbond™ also has a coefficient of thermal expansion compatible with aluminum, copper, and brass, making it particularly well suited for thermally bonding semiconductors and other components to chassis or heat sinks.

ORDERING INFORMATION

Part number	Net weight
4949G	0.8 oz (25 gram kit)
4950G	1.7 oz (50 gram kit)
4951G	3.5 oz (100 gram kit)
4952G	7.0 oz (200 gram kit)
4953G	4 lbs (1814 grams)

MIXING INSTRUCTIONS

Mix resin thoroughly before removing material. Add 7.1 parts of RT-7 hardener to 100 parts of resin by weight, or 17 parts of RT-7 hardener to 100 parts of resin by volume. Adhesive will set up in:

24 hrs at 25°C (77°F)	1 hr. at 100°C (212°F)
2 hrs. at 65°C (149°F)	30min. at 130°C (266°F)

Note: For maximum electrical and physical properties, a post cure is neccessary. Post cure at room temperature for 4 days or for 4 hours at 93°C (200°F).

HANDLING CHARACTERISTICS

Typical electrical and physical properties at room temperature with RT-7 hardener

Color	Green
Specific gravity	2.35
Working viscosity	25,000 cps
Thermal conductivity	1.34W/(m °C) (0.77 Btu/hr •ft• °F)
Thermal resistivity	29.4°C in/watt
Tensile strength	6.34 x 10^7 Pa (9,2000 psi)
Compressive strength	1.44 x 10^8 Pa (20,9000 psi)
Bond shear strength aluminum to aluminum, 25.4mm (1") overlap @ 25°C, (77°F)	3.17 x 10^7 Pa (4,6000 psi)
Thermal coefficient of expansion	24 x 10^{-6}/°C (1.32 x 10^{-6}/°F)
Water absorption, % after 10 days@ 25°C (77°F)	0.20
Hardness, Shore D	86
Volume resistivity	1.0 x 10^{16}
Dielectric strength	59.1 x 10^3 volts/mm (1500 volts/mil)
Dielectric constant@25°C (77°F) 100KHz	6.1
Dielectric factor@25°C (77°F) 100KHz	0.020
Operating temperatures	-65°C to 155°C (-85°F to 311°F)
Linear shrinkage	0.002 in/in
Shelf life	12 months*
Pot life@25°C (77°F)	2-3 hours
Suggested stripping agent	Miller-Stephenson MS 111
Cleaning solvent	Acetone

* Stated shelf life is from date of manufacture. To allow for inventory cycle, product shipped from Aavid will have less than 12 months remaining shelf life. Aavid guarantees a minimum of 3 months remaining shelf life. Please adjust order quantity so all product will be consumed within 3 months of date of shipment.

The Total Integrated Solution for Cooling Electronics®

AAVID THERMALLOY

Aavid Thermalloy has the expertise to design and manufacture cooling solutions spanning the entire range of thermal efficiency and mechanical complexity. The board level products displayed in this catalog represent only a fraction of our capabilities. Most applications require custom solutions, which is why so many leading electronics companies partner with Aavid Thermalloy.

For demanding applications Aavid Thermalloy can design and validate custom innovative solutions utilizing the most advanced engineering resources saving you precious development time. Our manufacturing facilities, located in strategic markets around the globe, deliver cost effective products providing you a competitive advantage. From concept to production, Aavid Thermalloy can enable your design anywhere in the world.

APPLIED THERMAL TECHNOLOGIES, LLC

Experts at solving cooling challenges ranging from networking, telecom and consumer electronics, to power and biomedical devices. Our clients include Cisco, Nortel, HP, Apple, Sun, Bio-Rad, Mitsubishi and other industry leading companies worldwide. Utilizing the latest CFD/FEA and experimental techniques we can:

- Perform conjugate analyses with conduction, convection and radiation
- Optimize venting and fan placement
- Increase power density
- Reduce noise, cost and size.
- Increase MTBF

Dedicated thermal engineers characterize your system and provide the most advanced and effective cooling solutions, saving thousands in engineering resources, thermal modeling software, and test hardware.

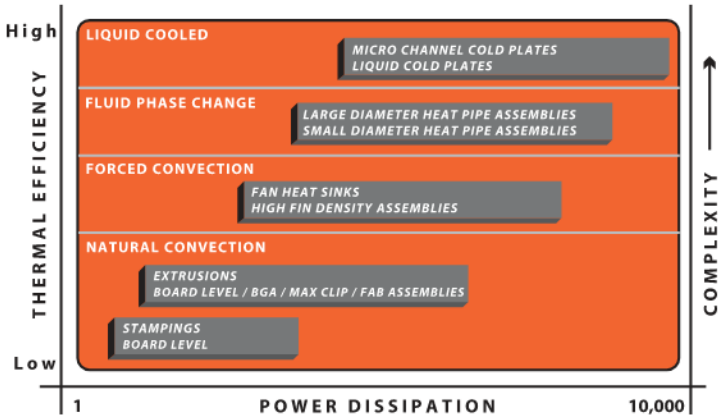

There are 4 cooling mechanisms that Aavid Thermalloy and Applied Thermal Technologies take pride in having expertise in: natural convection, forced convection, fluid phase change and liquid cooling. The above graph is a starting point to determine which technology can be used for your system configuration.

For more information regarding any of these cooling mechanisms, please contact Aavid Thermalloy at:

www.aavidthermalloy.com

AAVID THERMALLOY
www.aavidthermalloy.com

AMERICA **USA** Tel: +1 (603) 224-9988 email: info@aavid.com
EUROPE **Italy** Tel: +39 051 764011 email: sales.it@aavid.com
United Kingdom Tel: +44 1793 401400 email: sales.uk@aavid.com
ASIA **Singapore** Tel: +65 6362 8388 email: sales@aavid.com.sg
Taiwan Tel: +886 (2) 2698-9888 email: sales@aavid.com.tw