REV	DESCRIPTION\PER REQUEST	DRAWN	DATE

ELECTRICAL

Impedance	75 ohm
Frequency Range	0–2 GHz
Working Voltage	500 VRMS max. at sea level
Dielectric Withstanding Voltage	1500 VRMS min. at sea level
VSWR	Straight: 1.3 max. Right Angle: 1.5 max.
Contact Resistance	Center Contact: 3 Milliohms Max. Outer Contact: 2 Milliohms Max.
Insulator Resistance	5000 megohms min.

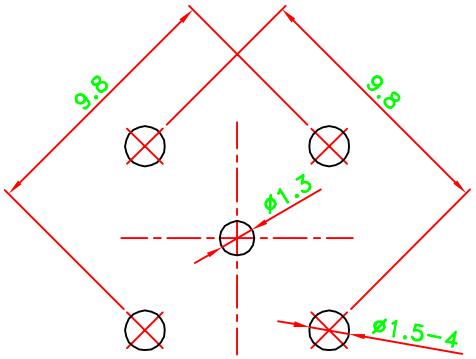

PCB MOUNTING HOLES

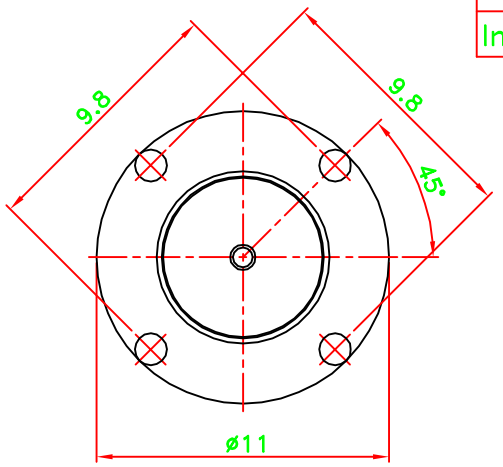

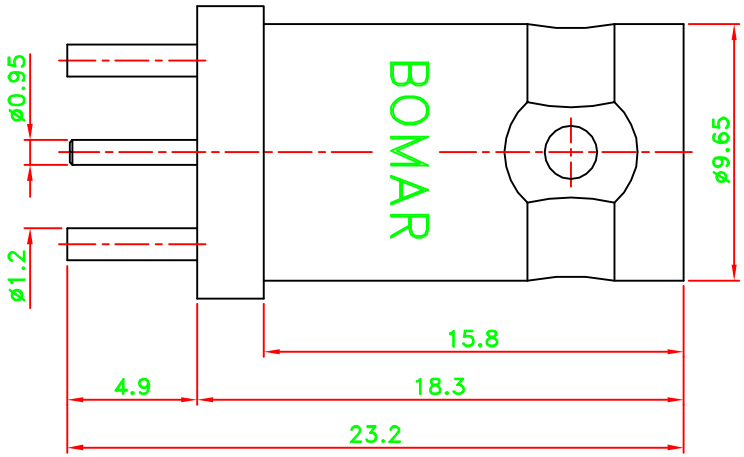

NO	Description	Q'ty	Material	Finish
4	Press washer	1	Brass	Nickel
3	Dielectric	1	Teflon	None
2	Pin	1	Brass	Gold
1	Body	1	Zinc	Nickel

PART NO. 361P704

APPROVED — DATE 03/23/09

CHECKED — DATE 03/23/09

DRAWN Kai — DATE 03/23/09

* MAJOR DIMENSION

UNLESS OTHERWISE NOTED TOLERANCES
0.5–6=±0.2
6–30=±0.4
30–120=±0.6
120–315=±1.0
ANGLES=±1°

SCALE 4/1 UNIT mm

Bomar Interconnect Products,Inc

TITLE BNC P.C. BOARD MOUNT JACK

DRAWING NO. 361P704 REV A

FILE NO. W:\AS\ASBNC\ASBNC-13225-75-TGN