Rev	AWO #	Description	Date	Appr
-		RELEASED	11/16/05	

APPROVED: _____

DATE: _____ TITLE: _____

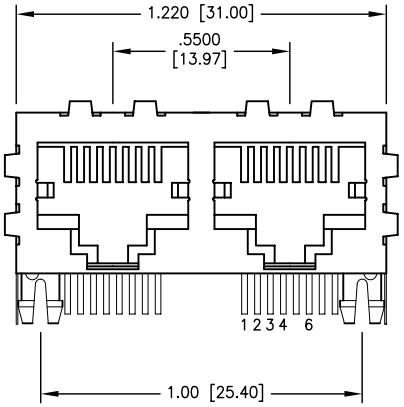

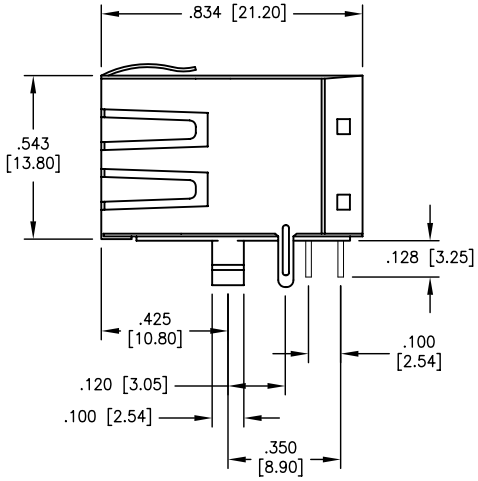

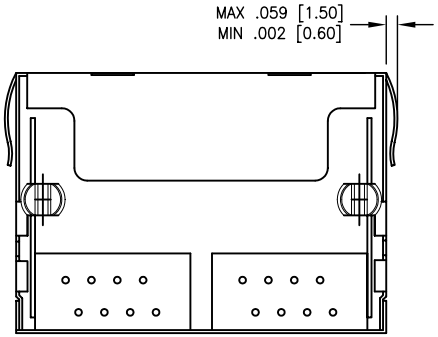

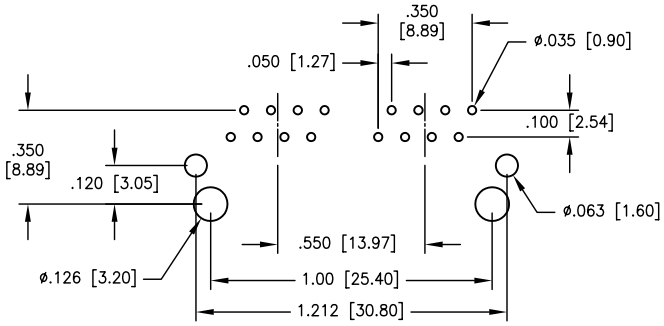

Recomended
PC Board Layout

SPECIFICATIONS:
Material:
Insulator: PBT, glass reinforced
thermoplastic, rated UL 94V–0
Insulator color: Black
Contacts: Phosphor Bronze
Shield: Phosphor Bronze, Tin plated
Contact Plating:
Gold Flash over Nickel underplate on contact area,
Tin over Copper underplate on tails
(See chart for thickness).
Electrical:
Operating voltage: 150 VAC max
Current rating: 1.5 Amps max
Contact Resistance: 20 mohms max. initial
Insulation resistance: 500 Mohms min @ 500 VDC
Dielectric withstanding voltage: 1000 VAC for 1 minut
Temperature Rating:
Operating temperature: –40°C to +125°C
Environmental:
Lead free, RoHS compliant.
Recommended soldering temp: 235 for 5 sec.

RoHS COMPLIANT

X	PLATING
0	15 µin Gold
1	30 µin Gold
2	50 µin Gold

UNLESS OTHERWISE SPECIFIED
ALL DIMENSIONS ARE INCHES [MM]
TOLERANCES: EXCEPT AS NOTED

INCHES		HOLES	
.X	± .10	Ø.X	±.10
.XX	± .020	Ø.XX	±.015
.XXX	± .015	Ø.XXX	±.010

APPROVALS		DATE
DRAWN	SS	11/16/05
CHECKED		
APPROVED		

ADAM TECH
909 Rahway Avenue, Union, NJ 07083
Phone: 908-687-5000 Fax: 908-687-5710

TITLE
MODULAR TELEPHONE JACK, GANGED
8P8C, SHIELDED

SIZE	PART NO.	REV.
X	MTJG-2-88GX1-FSD-PG8	-

REF: | SCALE: NTS | SHEET 1 OF 1