- Time-saving method of attaching heat sink to transistor and achieving cost-effective solderability.
- Provide uniform contact pressure on the transistor.
- Align the device leads to ensure compatibility with robotic insertion into the PC board.

Note: Heat sink material thickness for use with alignment pads is 1.27 to 1.52mm (.050" to .060"). The alignment pad assembly fits into a 1.57mm (.062") PC board. Alignment pad material is glass-reinforced nylon (U.L. 94 V-0 rated).

To order:

Add the alignment pad part number as a suffix to the heat sink model number. For example:

7022B-8223-CL03 (a = 7022B, b = 8223-CL03)

a=Heat Sink Model Number
b=Alignment Pad Part Number

ALIGNMENT PADS

Part Number	Device	Compatible Heat Sinks
8223-CL03	TO-220	7020, 7021, 7022, 7023, 7025
8241-CL11	TO-218	7022, 7023, 7025
	U.S Patent No. 4,847,449, U.K. Patent No. 2192492	

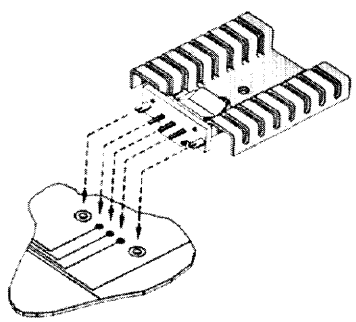

▼ 8223-CL03

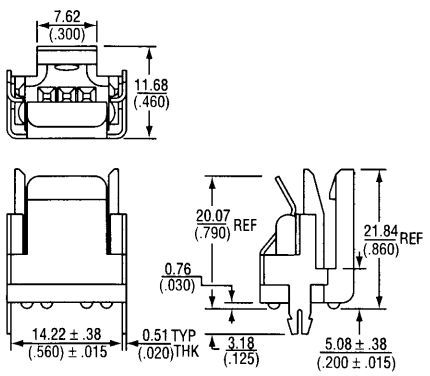

▼ 8241-CL11

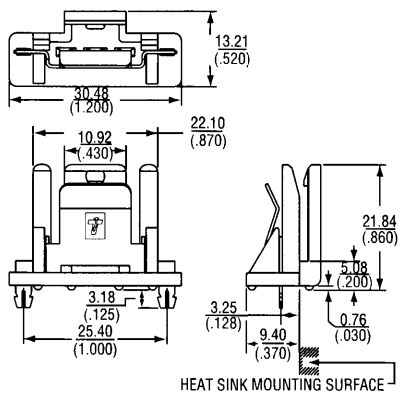

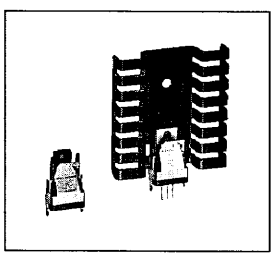

▲ 7022B-8223-CL03

Recommended Hole Pattern for 8223-CL03

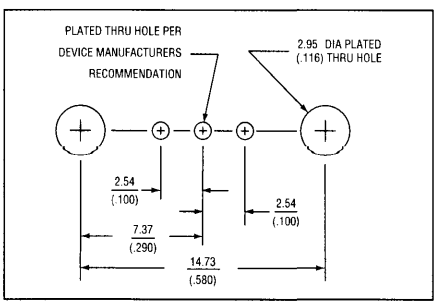

Recommended Hole Pattern for 8241-CL11

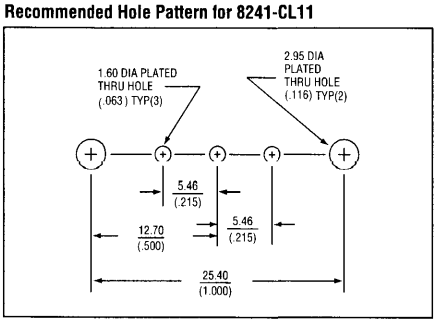

- Assists in inserting a TO-220 into an 8223-CL03 on a heat sink.
- A slight downward push on the heat sink assembly mounts the device in approximately two seconds.

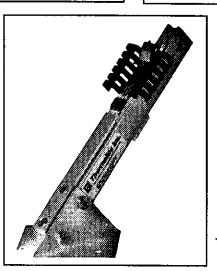

◀ SD-1